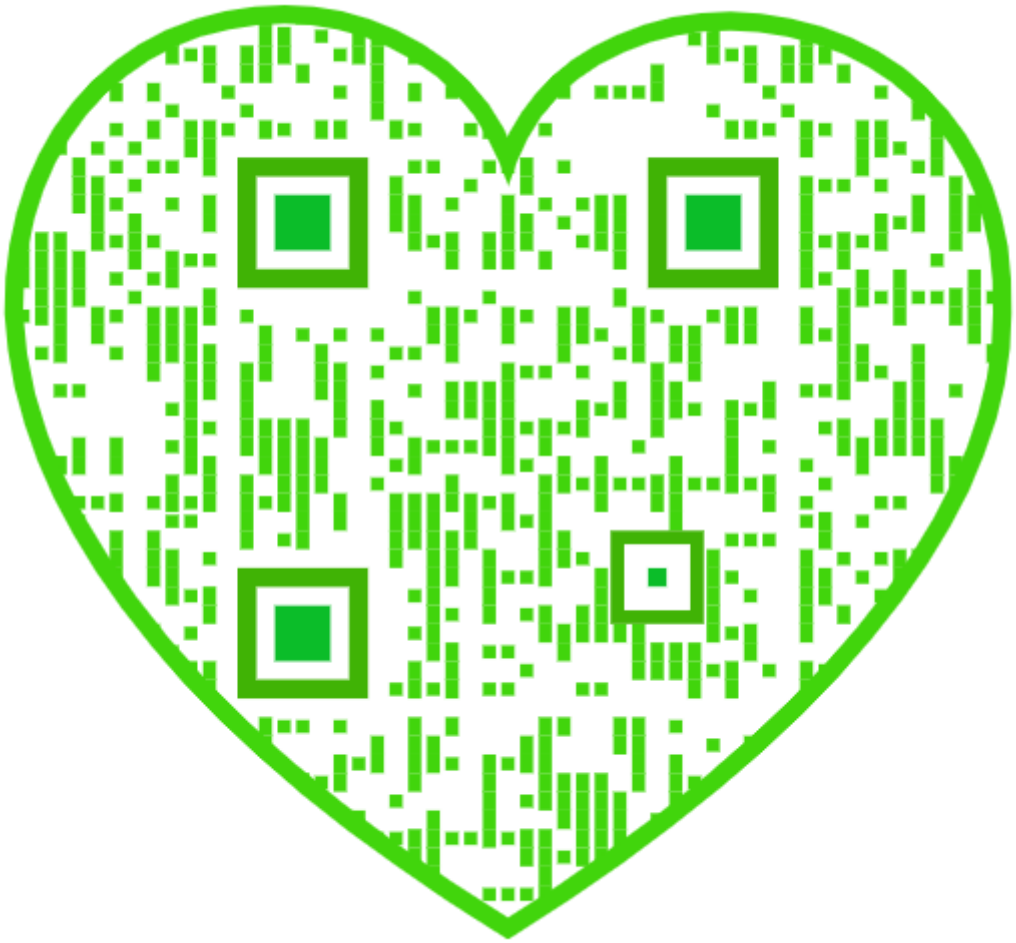

INDEXED

MACHINERY'S REFERENCE SERIES

EACH NUMBER IS ONE UNIT IN A COMPLETE LIBRARY OF MACHINE DESIGN AND SHOP PRACTICE REVISED AND REPUBLISHED FROM MACHINERY

NUMBER 11

WORM GEARING

THIRD EDITION—REVISED AND ENLARGED

NEW YORK

CONTENTS

Calculating the Dimensions of Worm Gearing, by RALPH E. FLANDERS - - - - - - - - - - 3

Hobs for Worm-Gears, by JOHN EDGAR - - - - 11

Suggested Refinement in the Hobbing of Worm-Wheels, by RALPH E. FLANDERS - - - - - - - - 15

The Location of the Pitch Circle in Worm Gearing, by OSCAR E. PERRIGO, JOHN EDGAR and RALPH E. FLANDERS - - - - - - - - - - - 18

The Hindley Worm and Gear, by JOHN EDGAR - - 31

The Design of Self-Locking Worm-Gears, by C. F. BLAKE 39

Copyright, 1910, The Industrial Press, Publishers of MACHINERY, 49-55 Lafayette Street, New York City

THE NEW YORK
PUBLIC LIBRARY
663891
ASTOR, LENOX AND
TILDEN FOUNDATIONS
R 1914 L

I — 10
NEW YORK
PUBLIC
LIBRARY

CHAPTER I

CALCULATING THE DIMENSIONS OF WORM GEARING*

The present chapter contains a compilation of rules for the calculation of the dimensions of worm gearing, expressed with as much simplicity and clearness as possible. No attempt has been made to give rules for estimating the strength or durability of worm gearing, although the question of durability, especially, is the determining factor in the design of worm gearing. If the worm and wheel are so proportioned as to have a reasonably long life under normal working conditions, it may be taken for granted that the teeth are strong enough for the load they have to bear. No simple rules have ever been proposed for proportioning worm gearing to suit the service it is

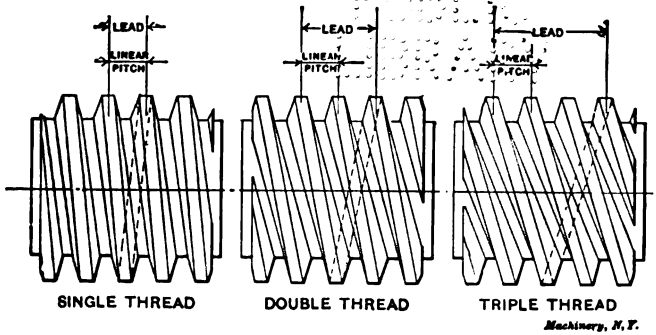

Fig. 1. Distinction between the Terms Lead and Linear Pitch as Applied to Worms

designed for. Judgment and experience are about the only factors the designer has for guidance. In Europe, a number of builders are regularly manufacturing worm drives, guaranteed for a given horse-power at a given speed. The dimensions of these drives are not made public, however; they would doubtless be of great value for purposes of comparison if they could be obtained. In the absence of these or other practical data, this phase of the subject has, of necessity, not been entered upon.

Definitions and Rules for Dimensions of the Worm

In giving names to the dimensions of the worm, there is one point in which there is sometimes confusion. This relates to the distinction between the terms "pitch" and lead." In the following we will adhere to the nomenclature indicated in Fig. 1. Here are shown three worms, the first single-threaded, the second double-threaded, and the

* MACHINERY, August, 1907.

last triple-threaded. As shown, the word "lead" is assumed to mean the distance which a given thread advances in one revolution of the worm, while by "pitch," or more strictly, "linear pitch," we mean the distance between the centers of two adjacent threads. As may be clearly seen, the lead and linear pitch are equal for a single-threaded worm. For a double-threaded worm the lead is twice the linear pitch, and for a triple-threaded worm it is three times the linear pitch. From this we have:

RULE 1. *To find the lead of a worm, multiply the linear pitch by the number of threads.*

It is understood, of course, that by the number of threads is meant, not the number of threads per inch, but the number of threads in the whole worm—one, if it is single-threaded, four, if it is quadruple-threaded, etc. Rule 1 may be transposed to read as follows:

RULE 2. *To find the linear pitch of a worm, divide the lead by the number of threads.*

The standard form of worm thread, measured in an axial section

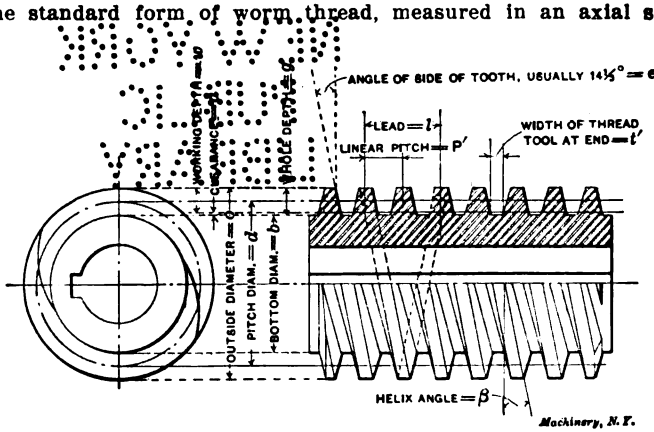
ANGLE OF SIDE OF TOOTH, USUALLY 14½° = ε
LEAD = l
LINEAR PITCH = p'
WIDTH OF THREAD TOOL AT END = t'
WORKING DEPTH = w
CLEARANCE = c
WHOLE DEPTH = h
OUTSIDE DIAMETER = D
PITCH DIAM. = d
BOTTOM DIAM. = b
HELIX ANGLE = β
Machinery, N.Y.

Fig. 2. Nomenclature of Worm Dimensions

as shown in Fig. 2, has the same dimensions as the standard form of involute rack tooth of the same linear or circular pitch. It is not of exactly the same shape, however, not being rounded at the top, nor provided with fillets. The thread is cut with a straight-sided tool, having a square, flat end. The sides have an inclination with each other of 29 degrees, or 14½ degrees with the center line. The following rules give the dimensions of the teeth in an axial section for various linear pitches. For nomenclature, see Fig. 2.

RULE 3. *To find the whole depth of the worm tooth, multiply the linear pitch by* 0.6866.

RULE 4. *To find the width of the thread tool at the end, multiply the linear pitch by* 0.31.

RULE 5. *To find the addendum or height of worm tooth above the pitch line, multiply the linear pitch by* 0.3183.

RULE 6. *To find the outside diameter of the worm, add together the pitch diameter and twice the addendum.*

RULE 7. *To find the pitch diameter of the worm, subtract twice the addendum from the outside diameter.*

RULE 8. *To find the bottom diameter of the worm, subtract twice the whole depth of tooth from the outside diameter.*

RULE 9. *To find the helix angle of the worm and the gashing angle of the worm-wheel tooth, multiply the pitch diameter of the worm by* 3.1416, *and divide the product by the lead; the quotient is the cotangent of the tooth angle of the worm.*

Rules for Dimensioning the Worm-Wheel

The dimensions of the worm-wheel, named in the diagram shown in Fig. 3, are derived from the number of teeth determined upon for it,

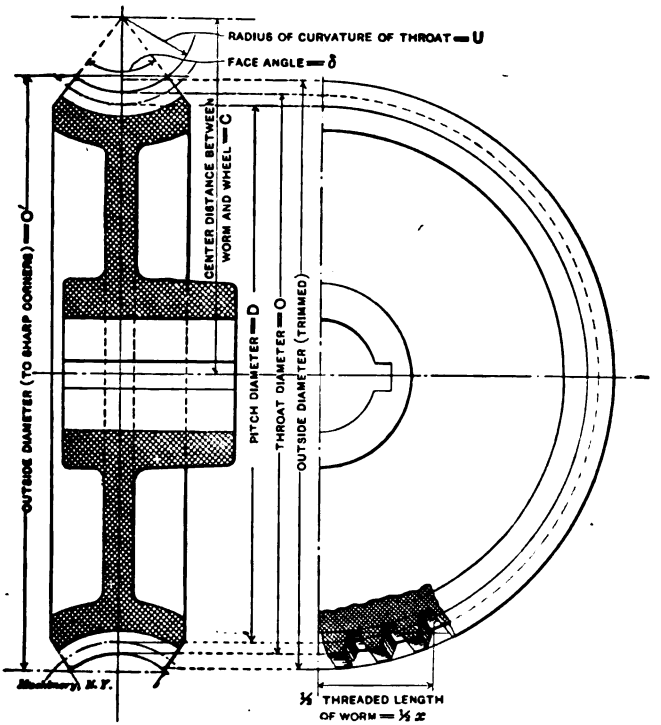
RADIUS OF CURVATURE OF THROAT = U
FACE ANGLE = δ
CENTER DISTANCE BETWEEN WORM AND WHEEL = C
OUTSIDE DIAMETER (TO SHARP CORNERS) = O'
PITCH DIAMETER = D
THROAT DIAMETER = O
OUTSIDE DIAMETER (TRIMMED)
½ THREADED LENGTH OF WORM = ½ x

Fig. 3. Nomenclature of Worm-wheel Dimensions

and the dimensions of the worm with which it is to mesh. The following rules may be used:

RULE 10. *To find the pitch diameter of the worm-wheel, multiply the number of teeth in the wheel by the linear pitch of the worm, and divide the product by* 3.1416.

RULE 11. *To find the throat diameter of the worm-wheel, add twice the addendum of the worm tooth to the pitch diameter of the worm wheel.*

RULE 12. *To find the radius of curvature of the worm-wheel throat, subtract twice the addendum of the worm tooth from half the outside diameter of the worm.*

The face angle of the wheel is arbitrarily selected; 60 degrees is a good angle, but it may be made as high as 80 or even 90 degrees, though there is little advantage in carrying the gear around so great a portion of the circumference of the worm, especially in steep pitches.

RULE 13. *To find the diameter of the worm-wheel to sharp corners, multiply the throat radius by the cosine of half the face angle, subtract this quantity from the throat radius, multiply the remainder by 2, and add the product to the throat diameter of the worm-wheel.*

If the sharp corners are flattened a trifle at the tops, as shown in Figs. 3 and 5, this dimension need not be figured, "trimmed diameter" being easily scaled from an accurate drawing of the gear.

There is a simple rule which, rightly understood, may be used for obtaining the velocity ratio of a pair of gears of any form, whether spur, spiral, bevel, or worm. The number of teeth of the driven gear, divided by the number of teeth of the driver, will give the velocity ratio. For worm gearing this rule takes the following form:

RULE 14. *To find the velocity ratio of a worm and worm-wheel, divide the number of teeth in the wheel by the number of threads in the worm.*

Be sure that the proper meaning is attached to the phrase "number of threads" as explained before under Rule 1. The revolutions per minute of the worm, divided by the velocity ratio, gives the revolutions per minute of the worm-wheel.

RULE 15. *To find the distance between the center of the worm-wheel and the center of the worm, add together the pitch diameter of the worm and the pitch diameter of the worm-wheel, and divide the sum by 2.*

RULE 16. *To find the pitch diameter of the worms, subtract the pitch diameter of the worm-wheel from twice the center distance.*

The worm should be long enough to allow the wheel to act on it as far as it will. The length of the worm required for this may be scaled from a carefully-made drawing, or it may be calculated by the following rule:

RULE 17. *To find the minimum length of worm for complete action with the worm-wheel, subtract four times the addendum of the worm thread from the throat diameter of the wheel, square the remainder, and subtract the result from the square of the throat diameter of the wheel. The square root of the result is the minimum length of worm advisable.*

The length of the worm should ordinarily be longer than the dimension thus found. Hobs, particularly, should be long enough for the largest wheels they are ever likely to be called upon to cut.

Departures from the Above Rules

The throat diameter of the wheel and the center distance may have to be altered in some cases from the figures given by the preceding

rules. If worm-wheels with small numbers of teeth are made to the dimensions given, it will be found that the flanks of the teeth will be partly cut away by the tops of the hob teeth, so that the full bearing area is not available. The matter becomes serious when there are less than 25 teeth in the worm-wheel. There are two ways of avoiding the difficulty. One of them is to increase the included angle of the sides of the thread tool. This departure from standard form, however, may be avoided by an increase in the throat diameter of the wheel, and consequently in the center distance. Discussions of this subject will be found in "Formulas in Gearing," and "Practical Treatise on Gearing," both published by the Brown & Sharpe Mfg. Co., Providence, R. I.

On the other hand, some designers claim to get better results in efficiency and durability by making the throat diameter of the worm-wheel *smaller* than standard, where it is possible to do so without too much under-cutting. A discussion of this subject will be found in Chapter IV of this treatise. In no case, however, should the throat diameter ever be made so small as to produce more interference than is met with in a standard 25-tooth worm-wheel.

Two Applications of Worm Gearing

Worm-wheels are used for two purposes. They may be employed to transmit power where it is desired to make use of the smoothness of action which they give, and the great reduction in velocity of which they are capable; instances of this application of worm gearing are found in the spindle drives of gear cutters and other machine tools. They are also used where a great increase in the effective power is required; in this case advantage is generally taken of the possibility of making the gearing self-locking. Such service is usually intermittent or occasional, and the matter of waste of power is not of so great importance as in the first case. Examples of this application are to be found in the adjustments of a great many machine tools, in training and elevating gearing for ordnance, etc. Calculations for the general design of this class of gearing will be treated separately. (See Chapter VI.) In the case of elevator gearing and worm feeds for machinery, the functions of the gearing are, in a measure, a combination of those in the two applications.

Examples of Worm Gearing Figured from the Rules

To show how the rules given above may be applied, we will work out two examples. The first of these is for a light machine tool spindle drive, in which power is to be transmitted continuously. It is determined that the velocity ratio shall be 8 to 1, and that the proper linear pitch to give the strength and durability required shall be about $\frac{5}{8}$ inch; the center distance is required to be 5 inches exactly. This case comes under the first of the two applications just described.

Assume, for instance, 32 teeth in the wheel, and a quadruple-thread worm. We will figure the gearing with these assumptions, and see if it appears to have practical dimensions.

The pitch diameter of the worm-wheel by Rule 10 is found to be

$$\frac{32 \times \frac{3}{4}}{3.1416} = 7.6394 \text{ inches.}$$

The pitch diameter of the worm by Rule 16 is found to be

$$(2 \times 5) - 7.6394 = 2.3606 \text{ inches.}$$

The addendum of the worm thread by Rule 5 is found to be

$$0.3183 \times \tfrac{3}{4} = 0.2387 \text{ inch.}$$

The outside diameter of the worm by Rule 6 is found to be

$$2.3606 + (2 \times 0.2387) = 2.8380 \text{ inches.}$$

For transmission gearing the angle of inclination of the worm thread should be not less than 18 degrees or thereabouts, and the nearer 30 or even 40 degrees it is, the more efficient will it be. From Rule 1 we find the lead to be $4 \times \frac{3}{4} = 3$ inches.

The helix angle of the worm thread is found from Rule 9, $2.3606 \times 3.1416 \div 3 = 2.4722 = \text{cot. } 22$ degrees, approximately. This angle will give fairly satisfactory results. The calculations are not carried any further with this problem, whose other dimensions are determined from those just found. In the following case, however, all the calculations are made.

For a second problem let it be required to design worm feed gearing for a machine to utilize a hob already in stock. This hob is double-threaded, ½ inch linear pitch, and 2½ inches diameter. The center distance of the gearing is immaterial, but it is decided that the worm-wheel ought to have about 45 teeth to bring the ratio right. The only calculations made are those necessary for the dimensions which would appear on the shop drawing.

To find the lead, use Rule 1: $0.5 \times 2 = 1.0$ inch.

To find the whole depth of the worm tooth, use Rule 3: $0.5 \times 0.6866 = 0.3433$ inch.

To find the addendum, use Rule 5: $0.5 \times 0.3183 = 0.15915$ inch.

To find the pitch diameter of the worm, use Rule 7: $2.5 - 2 \times 0.15915 = 2.1817$ inches.

To find the bottom diameter of the worm, use Rule 8: $2.5 - 2 \times 0.3433 = 1.8134$ inch.

To find the gashing angle of the worm-wheel, use Rule 9: $2.18 \times 3.14 \div 1 = 6.845 = \text{cot. } 8$ degrees 20 minutes, about.

To find the pitch diameter of the worm-wheel, use Rule 10: $45 \times 0.5 \div 3.1416 = 7.1620$ inches.

To find the throat diameter of the worm-wheel, use Rule 11: $7.1620 + 2 \times 0.15915 = 7.4803$ inches.

To find the radius of the throat of the worm-wheel, use Rule 12: $(2.5 \div 2) - (2 \times 0.15915) = 0.9317$ inch.

The angle of face may be arbitrarily set at, say, 75 degrees, in this case. The "trimmed diameter" is scaled from an accurate drawing and proves to be 7.75 inches.

To find the distance between centers of the worm and wheel, use Rule 15: $(2.1817 + 7.1620) \div 2 = 4.6718$ inches.

To find the minimum length of threaded portion of the worm, use

Rule 17: $7.4803 - 4 \times 0.15915 = 6.8437$

$\sqrt{7.4803^2 - 6.8437^2} = 3$ inches, approximately.

It will be noted that the ends of the threads in Fig. 2 are trimmed at an angle instead of being cut square down, as in Fig. 1. This gives a more finished look to the worm. It is easily done by applying the sides of the thread tool to the blank just before threading, or it may be done as a separate operation in preparing the blank, which will in either case have the appearance shown in Fig. 4. The small diameters at either end of the blank in Fig. 4 should, in any event, be turned exactly to the bottom diameter shown in Fig. 2, and obtained by Rule 8. This is of great assistance to the man who threads the worm,

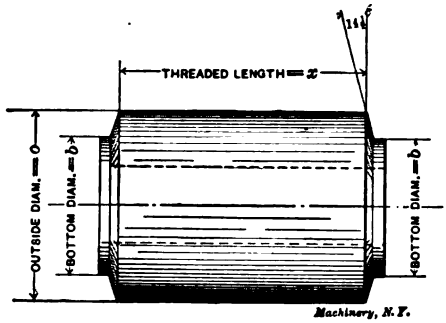

Fig. 4. Shape of Blank for Worm

as he knows that the threads are sized properly as soon as he has cut down to this diameter with the end of his thread tool. This always supposes, of course, that the thread tool is accurately made.

Formulas for the Design of Worm Gearing

For the convenience of those who prefer to have their rules compressed into formulas, they are so arranged in the following. The reference letters used are as follows:

N = number of teeth in worm-wheel.
n = number of teeth or threads in worm.
P' = circular pitch of wheel and linear pitch of worm.
l = lead of worm.
g = whole depth of worm tooth.
t' = width of the thread tool at the end.
s = addendum or height of worm tooth above pitch line.
o = outside diameter of the worm.
d = pitch diameter of the worm.
b = bottom or root diameter of the worm.
β = helix angle of worm and gashing angle of wheel.
δ = face-angle of worm-wheel.
D = pitch diameter of the worm-wheel.
O = throat diameter of the worm-wheel.
O' = diameter of the worm-wheel to sharp corners.
U = radius of curvature of the worm-wheel throat.

R = velocity ratio.
C = distance between centers.
x = threaded length of worm.

$$l = n \times P' \quad (1)$$
$$P' = l \div n \quad (2)$$
$$g = 0.6866\ P' \quad (3)$$
$$t' = 0.31\ P' \quad (4)$$
$$s = 0.3183\ P' \quad (5)$$
$$o = d + 2s \quad (6)$$
$$d = o - 2s \quad (7)$$
$$b = o - 2g \quad (8)$$

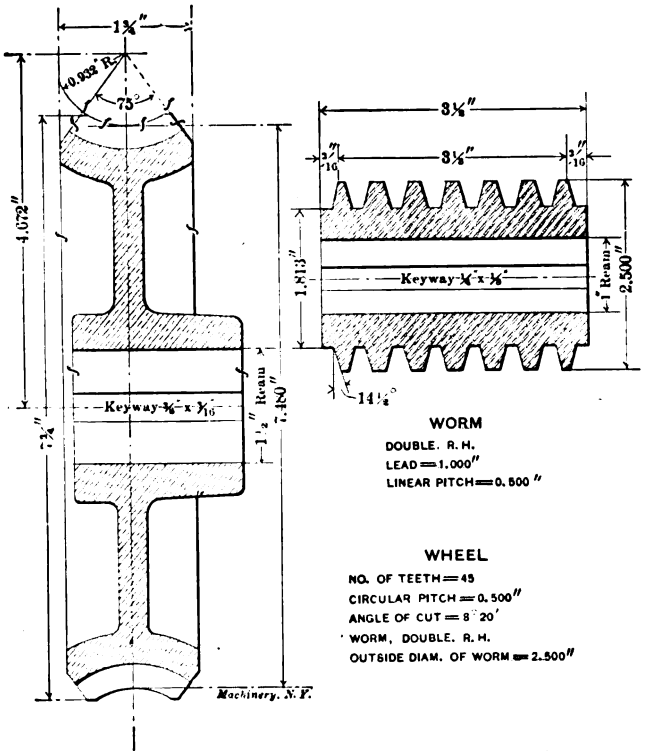

Fig. 5. Model Drawing of Worm and Worm-wheel

$$\text{Cotangent } \beta = 3.1416d \div l \quad (9)$$
$$D = N\,P' \div 3.1416 \quad (10)$$
$$O = D + 2s \quad (11)$$
$$U = \tfrac{1}{2}o - 2s \quad (12)$$
$$O' = 2\,(U - U\cos\delta/2) + O \quad (13)$$
$$R = N \div n \quad (14)$$
$$C = (D + d) \div 2 \quad (15)$$
$$d = 2C - D \quad (16)$$
$$\text{Minimum value of } x = \sqrt{O^2 - (O - 4s)^2} \quad (17)$$
Width of worm-wheel at root of teeth $= 0.6o$ (approx.) (18)

A model drawing of a worm-wheel and worm, properly dimensioned, is shown in Fig. 5. This drawing follows, in general, the model drawings shown by Mr. Burlingame in the August, 1906, issue of MACHINERY, taken from the drafting-room practice of the Brown & Sharpe Mfg. Co. In cases where the worm-wheel is to be gashed on the milling machine before hobbing, the angle at which the cutter is set should also be given. This is the same as the angle of worm tooth found by Rule 9. In cases where the wheel is to be hobbed directly from the solid by a positively geared hobbing machine, this information is not needed. It might be added that it is impracticable with worm-wheels having less than 16 or 18 teeth to gash the wheel, and then hob it when running freely on centers, if the throat diameter has been determined by Rule 11.

When worms have a large helix angle (15 degrees or more), the dimensions of the tooth should be measured at right angles to the helix. In such cases, the following changes should be made in the formulas just given.

Let P'_n = normal circular pitch = $P' \cos \beta$.

Formulas (3), (4), and (5), and the corresponding rules, should then be written as follows:

$$g = 0.6866\, P'_n \qquad (3)$$

$$t' = 0.31\, P'_n \qquad (4)$$

$$s = 0.3183\, P'_n \qquad (5)$$

When these changes are made, all the other formulas will give correct results when used in their original form.

CHAPTER II

HOBS FOR WORM-GEARS*

If a worm and gear of standard proportions are brought into mesh, we have at the bottom of both the thread of the worm and teeth of the gear a clearance equal to one-tenth of the thickness of the thread or tooth at the pitch line. The clearance at the root of the gear tooth is obtained by enlarging the hob over the diameter of the worm, by an amount equal to two clearances, while the clearance of the tooth in the thread bottom is taken care of by the proper sizing of the gear blank.

While it may be customary practice to make the hob an exact duplicate of the worm except in the one item of outside diameter, a hob proportioned as suggested in Fig. 7 is recommended as one that will give much more satisfactory results, and be found to be well worth any additional trouble in construction required beyond that for the style ordinarily used. The peculiar feature of this hob is that it is an

* MACHINERY, September, 1907.

exact opposite of the worm with respect to the proportions of the thread shape; the depth below the pitch line in one case being equal to the height above the pitch line in the other. The object of this is to have a hob that will form the complete outline of the tooth and make it absolutely certain that the standard proportions of tooth and clearance are obtained. Thus, should the diameter of the blank be large, the hob will trim off the top of the gear teeth to the proper length, when the proper center distance is maintained.

There is another point that is generally overlooked, and that is the necessity for having the corners of the thread rounded over, and for providing a liberal fillet at the root of the thread. The radii of the rounded corner and the fillet may be as large as the clearance will allow, which would be one-twentieth of the circular pitch of the thread.

The effect that this fillet and rounded thread have on the shape of

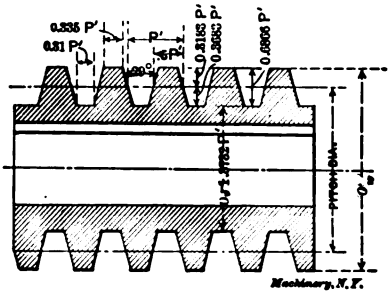

Fig. 6. Dimensions of Worm

the tooth is something that greatly increases the quality of the gear and the strength of each individual tooth. The rounded corner on the thread points does away with any tendency to scratch the surface of the tooth in the cutting action, and leaves a much larger fillet at the root, greatly increasing the strength. The fillet at the bottom of the thread rounds off the top of the tooth in the worm-gear, removing any burrs, and leaving a nicely finished product. This fillet also removes the dangerous tendency of the hob to develop cracks in the hardening process—a common source of trouble even where care is taken. Fig. 6 shows the proportions of the worm in comparison with the hob in Fig. 7.

In forming the hob, much can be gained by making a special form tool of correct proportion that will leave no chance for error; the only dimension needing care then, is the diameter. Such a tool is shown in Fig. 9. The figure is dimensioned by formulas, so that a tool for any pitch can be easily proportioned from it. This tool may be made by using a gear caliper without resorting to the protractor, or the protractor may be used in laying out the angle. This tool may be made without side clearance, providing that the sides incline in the same direction and at the same angle that the thread takes, but under ordinary circumstances, where only one hob is to be made, little is gained by having no side clearance. Clearance may be made

from 5 to 10 degrees from the angle of the thread. Grinding a tool like this of course changes its form, so it must not be used indefinitely in making large numbers of similar hobs.

Number of Flutes in Hobs

The number of flutes that should be provided in the hob is a point on which very little is said, various authorities differing widely. Where the hob is to be used in an automatic hobbing machine in which the hob and blank are positively geared together, the number of flutes may be a comparatively small number as compared with a hob that is to be used in connection with ordinary processes of hobbing worm gears. In the process in which the previously gashed worm-gear blank is swung loosely on centers and revolved by the hob as the latter rotates, the hob should have a larger number of flutes.

A rule that checks up well with present practice is as follows:

To find the number of flutes in a hob, multiply the diameter of the hob by three, and divide by twice the circular pitch.

The above rule gives suitable results on hobs for general purposes.

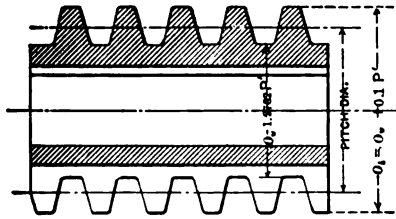

Fig. 7. Dimensions of Hob

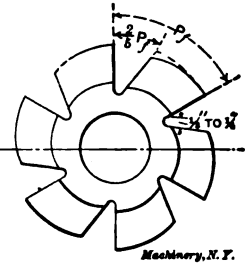

Fig. 8. Data for Fluting Hob

When the result gives an odd number of teeth, take the next smaller even number, to facilitate calipering.

Some authorities on worm-gearing state that the number of flutes in a hob should in no case be an exact multiple of the number of threads. Their reason for this rule is that the hob so gashed will produce a much smoother tooth and one nearer correct in shape, because no tooth in the hob passes the same tooth in the gear twice in succession, so that any little imperfections in shape of the individual hob teeth are counteracted by one another. Another authority is strong in his advice not to have the circumferential distance from flute to flute equal to or equally divisible by the circular pitch, for the same reason as stated regarding the former rule. From these statements, it is seen that to obtain a rule that would be at once simple and yet take all conditions into consideration, would be a difficult proposition. It seems, however, that only the first of these two rules is a logical one. Owing to the fact that hobs have teeth only, instead of full surfaces matching the worm, the curved outlines of the wheel teeth are merely approximated by a series of tangents. If the number of flutes in the hob is a multiple of the number of threads, the hob teeth will "track" after each other, giving wheel teeth

only roughly approximated by a comparatively small number of long tangents.

The cutter used in gashing the hob should be about ⅛ inch thick at the periphery for hobs of ordinary pitch, while for those of coarser pitch a cutter ¼ inch thick would be much better. The width of the gash at the periphery of the hob should be about two-fifths the pitch of the flutes. The cutter should be sunk into the blank so that it reaches from 3/16 to ¼ inch below the root of the thread. Fig. 8 shows an end view of a hob gashed according to these rules.

Where a hob is to be used to any great extent, and is subject to much wear, it would be advisable to increase the diameter above the

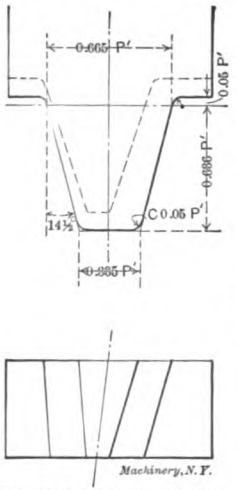

Fig. 9. Dimensions of Tool for Threading Hob

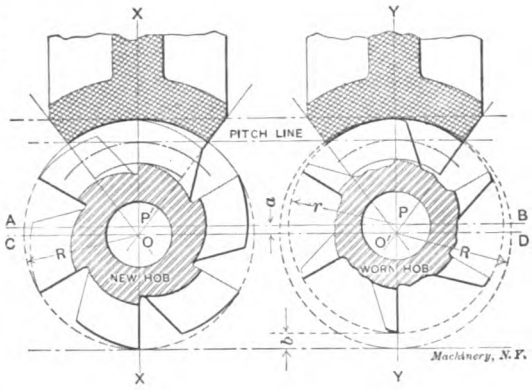

Fig. 10. The Difference in Shape of Teeth Cut by New and Old Hobs

dimensions given from 0.010 to 0.030 inch according to its diameter and pitch, to allow for decrease in diameter due to the relief, and caused by grinding back the cutting face in sharpening.

Hobs are generally fluted parallel with the axis, but it is obvious that they should be gashed on a spiral at right angles with the thread helix in order that the cutting face may be presented with theoretical correctness; but the trouble encountered in relieving the teeth on the ordinary backing off attachment is the cause of the common mode of fluting. When the pitch or lead is coarse in comparison with the pitch diameter of the hob, so that the angle is correspondingly steep, it may be best to flute on the normal helix, and if the hob cannot be machine relieved, it may be backed off by hand.

The amount of relief depends much on the use for which the hob is intended. A hand hob for hobbing a gear in position may be made with little or no relief, while hobs used on hobbing machines may have much more relief than those used on the milling machine.

CHAPTER III

SUGGESTED REFINEMENT IN THE HOBBING OF WORM-WHEELS*

At the left of Fig. 10 is a sectional view showing a hob in the act of putting the last finishing touches on a worm-wheel. The hob is supposed to be a new one and is shown in the condition it is in when first received from the makers. At the right of Fig. 10 is shown the same hob putting the finishing touches on a worm-wheel similar to that in the first case. The hob in this case is represented as having been in use for a considerable time, and having been ground down to the last extremity, ready to be discarded for a new one. A study of this cut will show that if the hob is made in the first place to properly match the worm which is to drive the wheel, it will not, when worn, cut exactly the proper form of tooth in the blank to mesh with that worm. The teeth are cut to the same depth in each case, this being necessary in order to make a proper fit with the worm, which is the same in each case and is set at the same center distance. The grinding away of the worn hob has reduced its diameter by an amount indicated by dimension b. Its center is therefore at P on the line $A\,B$, which is offset by a distance represented by dimension a from the line $C\,D$ on which the center O of the new hob is located. This reduction in diameter as the hob is ground away from time to time, so evidently follows from the construction of the relieved hob, that it scarcely needs to be explained.

It is said of relieved hobs that they can be ground without changing their shape. This is true so far as the outline of the cutting edge is concerned, but it will be evident on examining the conditions shown at the right hand of Fig. 10, that whatever the outline of the cutting edges, a new hob of radius R will not cut exactly the same shape teeth in the blank as the worn hob with radius r. The elements of the tooth surface it generates are struck from a center P, removed by dimension a from center O' which is the location of the axis of the worm with which it meshes.

It is possible, and perhaps practicable, to overcome this slight error; that is, to so design and use the hob that it will cut as correct teeth when worn as when new. In Fig. 11, dotted line $A\,A$ represents the outlines of a new hob in the act of finishing the worm-wheel shown. Were a hob, ground as shown at the right of Fig. 10, to be substituted on the arbor for this new hob, without altering the adjustment of the machine except to move the hob endwise and bring it in contact with the teeth of the wheel on one side, this hob would be represented in Fig. 11 by the full line $B\,B$. It is evident that the left-hand cutting edges of this hob coincide (to the depth they extend into the wheel) with those of the new hob represented by outline $A\,A$. They will,

* MACHINERY, May, 1907.

therefore, so far as they extend, cut identically similar and correct tooth curves with the new hob.

Teeth cut with this worn hob would, however, evidently have two faults. The space would be too narrow at the pitch line by a distance measured by dimension *m*, and they would not be cut deep enough in the blank by a distance measured by dimension *n*. Our problem is to so alter the design and application of the hob, that, even when worn, we can cut the teeth deep enough and the space wide enough.

Fig. 12 shows these conditions fulfilled. Dotted line *C C* shows the outline of the proposed hob when new. The only difference between the proposed hob and the regular one, whose outlines are shown by the dotted line *A A* in Fig. 11, is that the teeth have been lengthened by an amount equal to dimension *o*. The hob is fed in as was the case with the new hob in Fig. 11 until the distance between its center line and that of the blank is the same as that between the center line of the worm and the wheel in the finished machine. The increase in

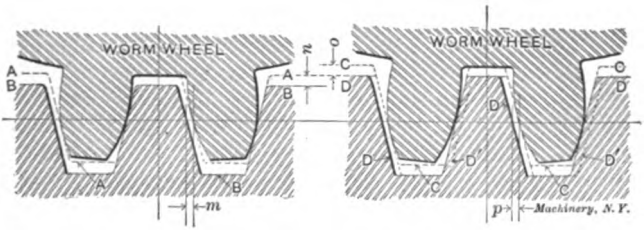

Fig 11. Cutting Action of Ordinary Hob at Fixed Center Distance, when New and when Worn

Fig 12. Cutting Action of Proposed Hob, when New and when Old

radius, then, by an amount *o*, makes the hob cut a clearance deeper than is necessary by that amount. In a spur gear this would doubtless be a bad thing, since it would make the tooth slenderer and therefore weaker. A worm-gear, however, if designed to be sufficiently durable for continuous use, is almost certain to be several times stronger than necessary, so that the slight weakening involved in the change is not of great importance. When the hob is worn to the shape shown by the full outline *D D*, the hob is evidently of the same diameter as the new one in Fig. 11, represented by dotted outline *A A*. Our tooth space, however, as before explained, will be too narrow by the amount *m* in Fig. 11 or *p* in Fig. 12. To widen it out sufficiently, it is therefore necessary for us, after the hob has been fed in to the proper depth, to still continue the cutting action, feeding the hob endwise, however, until it has been displaced to the position indicated by outlines *D' D'*. The resulting tooth is evidently identical with that given by the new hob *A A* in Fig. 11.

It will be understood that when the hob in Fig. 12 is new, it will not have to be shifted end-wise at all, since it will cut a tooth space of the proper width as soon as fed to depth. It will, however, cut a space deeper than necessary by an amount *o*. The worn hob, on the other hand, has to be shifted longitudinally by an amount *p* and cuts to exactly the required depth. These represent the two extreme con-

ditions. When the hob is half worn, the excess clearance will be equal to half of *o*, and the longitudinal displacement necessary will be equal to half of *p*.

While the change in the design of the hob could be made easily enough, there is doubtless some difficulty in making the required change in the hobbing of the blank. Taking it for granted that the hob has been made to suit the worm which is to be used, and that it, therefore, has the same pitch diameter and thickness of tooth at the pitch line, the method of procedure will invariably require that the hob be fed in to the worm-wheel blank until the distance from the center of the hob to that of the wheel is the same as the distance from the center of the worm to that of the wheel in the finished machine. This will be true whether the hob is new or worn, and whatever may be the kind of machine on which the hobbing is done.

The method by which the hob is displaced longitudinally will depend on the machine used for the operation. There will be no possible way of doing it if the wheel is being finished while running loosely on centers, as is common practice when the blank has first been gashed. It is required that the hob and blank be positively geared together. If a positively driven hobbing attachment in the milling machine is being used, the matter is simple. If the hob is being driven by the spindle of the machine, throw in the cross feed in either direction until the required longitudinal displacement of the wheel with relation to the hob has taken place. The question as to when this has taken place may be decided either by measuring the thickness of the tooth, as in cutting spur gears, or by trying the wheel from time to time with its worm, the two parts being mounted in place in the machine they are to go in, or held the proper distance apart by other means.

For regular hobbing machines, as at present made, the matter is more difficult. The required longitudinal displacement of the hob may be obtained, in effect, by a rotary displacement of the hob which may be accomplished by slipping (a tooth at a time), the teeth of the change gears connecting the hob and the blank. If a hobbing machine were to be built especially for use in the way which is here suggested, differential gearing could be introduced in the train between the hob and the wheel, to which a power feed could be given to effect the rotary displacement when the hob has been fed to depth, or a power feed might be applied to feed the spindle and its attached hob endwise to effect the same result.

It is not certain that the error which exists in the use of relieved hobs is of enough importance to warrant taking any trouble to remedy it. It is always well, however, to know and understand such errors as may exist in any process of this sort, no matter if they are of no great practical importance. While some designers and shop men have doubtless recognized the existence of this particular error, still probably most of them take it for granted that the process is absolutely accurate, since they are so often reminded that the relieved hob can be "ground without change of shape."

CHAPTER IV

THE LOCATION OF THE PITCH CIRCLE IN WORM GEARING

Different authorities and writers on mechanical subjects have always held very different opinions regarding the location of the pitch circle of a worm gear. No better example of these differences in opinion can be given than by repeating a discussion in relation to this interesting subject which took place in the columns of MACHINERY, during 1905. The subject was brought up by Mr. Oscar E. Perrigo, who, in describing the feed arrangement of a heavy turret lathe, into the design of which the worm and worm-gear entered, found occasion to state his opinions in regard to the construction of this mechanism. Mr. Perrigo says*:

"Many good mechanics are so prone to object to any kind of a worm-gear, and can cite numerous examples wherein they have proven failures and utterly worthless for the purposes intended, that there is a very strong prejudice against them in any form. The writer is of the opinion that there is really only one practical objection to a properly constructed worm-gear, and that is, it must be constantly lubricated, and men running machines in which they are used are very liable to forget this fact altogether. The principal, and almost the only reason why worm-gears fail to give satisfactory results is that usually they are not properly designed at first. Another is that they are not properly hobbed out, and sometimes not hobbed at all. It is the purpose of this article to point out how they should be designed in order that they may be successful.

"There are various methods for determining the diameter of the pitch circle of a worm-gear. One authority takes the outside diameter of the turned blank at its smallest diameter, or throat, as proper. Another takes the diameter of the bottom of the teeth at the extreme edge of the cut gear; still another, the point where the pitch line of the worm intersects the center line passing through the worm and worm-gear. All these are more or less in error, as they do not take proper account of the width of the face of the gear. If the teeth are straight, as in a spur gear, we naturally take a point in the center of the teeth (after subtracting the clearance) as the pitch line. Now when we have a curved tooth it obviously is not proper to do this, as the actual working pitch diameter must be somewhat larger than this; but how much larger should evidently be determined by the amount of contact with the worm, that is, the angle within which this contact is to be, the width of face being in turn controlled by the diameter of the worm.

"Practically, the face of the worm gear is about equal to one-half

* MACHINERY, June, 1905.

the outside diameter of the worm, but the matter is best considered by saying that the enclosed angle of contact should not be less than 45 degrees nor more than 80 degrees, while from 60 degrees to 70 degrees will be found most useful. The writer has found by ample practice that the true working pitch diameter is most nearly determined by the method shown in Fig. 13, which represents a worm-wheel having a contact of 70 degrees. To determine the pitch diameter, divide the arc of the pitch line of the worm, contained between the center line and one of the lines of the enclosing angle, into three equal parts, and draw the line *a* at the intersection of the second line from the center line. This will give the point from which to measure the pitch diameter. If this is laid out on a large scale and with various angles of contact, the difference between it and the usual methods will be more clearly shown than it is in the engraving." It will be found to make a difference of several teeth in a worm-wheel of a fairly large number of teeth.

As to the proof of the correctness of this method of designing worm-gears, Mr. Perrigo states that he has used it successfully for years.

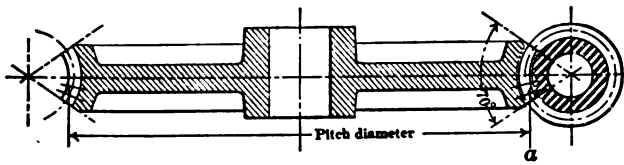

Machinery, N. Y.

Fig. 13. Method of Determining the Pitch Diameter of a Worm-gear

The turret lathe, previously referred to, on which this worm gearing acted as a drive for the feed, would readily bore 3-inch holes in 50-point carbon steel spindles. In several cases where a 5⅛-inch hole was required, it was first bored 2 inches and then a boring bar, provided with two double-end cutters, was introduced, enlarging the hole from 2 inches to 5⅛ inches at one cut and taking out nearly thirty pounds of chips per hour. The machine had been in use for over seven years, and the same worms and worm-gears were on it that were put on when the machine was first built, and they were in good condition for as many years more of good service. The working faces did not seem to have changed their original form during the entire time, which, Mr. Perrigo says, may be taken as ample evidence that they were right originally, particularly as he had frequently seen worm-gears in lathe aprons, designed after the usual methods, entirely worn out with six or eight months' service.

Undoubtedly prompted by Mr. Perrigo's statements in regard to the worm-gear, Mr. John Edgar, a few months later,* added to the discussion on the subject. He mentions first the method for the location of the pitch circle accepted as standard practice. According to this method the pitch line of a worm is located on a circle whose radius is smaller than that of the worm by an amount equal to one-half the

* MACHINERY, October, 1905.

working depth of the tooth. Where the working depth, as in standard practice, is equal to 0.6366 times the linear pitch, and when P' is the linear pitch, o the outside diameter, and d the pitch diameter of the worm, this fact may be expressed by the following formula:

$$d = o - 0.6366\,P' \qquad (1)$$

In Fig. 14 we have a section through a worm and worm-gear. The pitch circle for the worm, according to standard practice, is located as shown tangent to the line E, which is the pitch line of the worm-

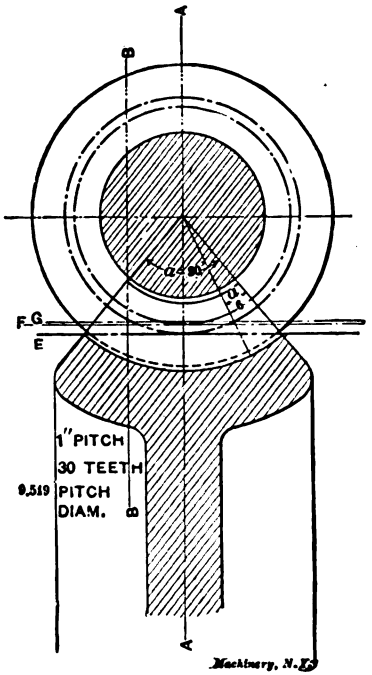

Fig. 14

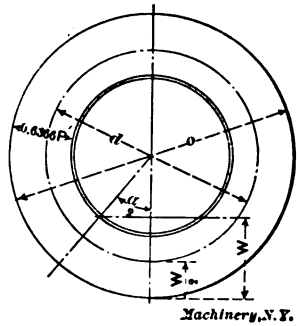

Fig. 15

gear. On inspection of the figure it is seen that while the addendum of the worm and worm-gear are equal at the center line $A\,A$, they are not at any other point along the pitch line, either to the right or the left. A section taken through the gear on the line $A\,A$ would reveal teeth similar in shape to those of a spur gear of the same pitch and number of teeth. But how does this shape of the teeth vary as we shift this line either side of the central position? Let us show this by example, taking the case of a worm having a single thread of 1-inch pitch. By taking a section on line $B\,B$ instead of the center line $A\,A$ we obtain Fig. 16. This figure shows plainly that the faces of the teeth of the gear are considerably longer than the flanks. It is easily seen that the greater the angle α is, the greater will this difference be, and *vice versa*, until we reach the central position, where there is

no difference. Therefore we see that this angle α plays an important part in the design of a successful worm-gear.

This angle is not the only cause of distortion in the shape of the tooth. With a little thought it will be seen that the angle of the helix also is a cause for further irregularity. To illustrate this we will take

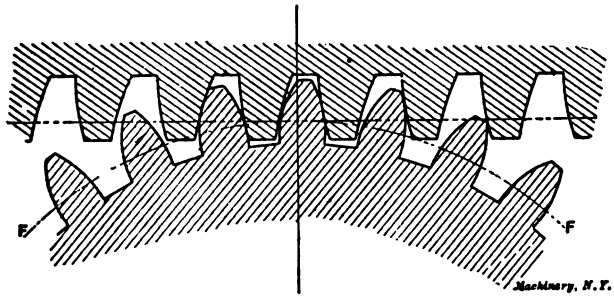

Fig. 16. Section at Line BB, Fig. 14, Single-thread Worm, One-inch Lead

the case of a worm having the same pitch, but having three threads instead of one, giving a lead of 3 inches. A section of this at $B\,B$ is shown in Fig. 17. These conditions have the effect of producing even longer faces than do those in the former case.

What can be done to remedy this defect? We can shorten the faces, but when we do that at this point we do so all along the face of the gear and thus change the shape at $A\,A$, where it is normal. Therefore, the best we can do is to divide the difference at the two extreme points—$A\,A$ and $B\,B$. This can be done as follows: In an ordinary spur gear of standard proportions the pitch line is located at a point midway of the working depth. From Fig. 15, which shows the end

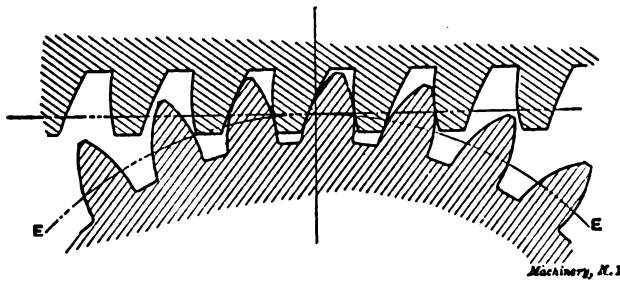

Fig. 17. Section at Line BB, Fig. 14, Triple-thread Worm, Three-inch Lead

view of a worm, we see that the total working depth is equal to W, so that from the foregoing statement the pitch line should pass through a point situated at a distance equal to one-half of W from the outside of the worm, making d the pitch diameter of the worm.

By an inspection of Fig. 15 we may derive the following formula:

$$W = \frac{o}{2} - \cos\frac{\alpha}{2}\left(\frac{o}{2} - 0.6366\,P'\right) \qquad (2)$$

Since $d = o - W$, we may obtain the value of d in terms of o, P' and a:

$$d = \frac{o}{2} + \cos\frac{a}{2}\left(\frac{o}{2} - 0.6366\,P'\right) \qquad (3)$$

Solving this last equation for o, we have the means for finding the outside diameter when d, P' and a are given:

$$o = \frac{2\,d + 1.273\,P'\cos\frac{a}{2}}{1 + \cos\frac{a}{2}} \qquad (4)$$

Formulas (3) and (4) may be used for obtaining the pitch diameter of any worm when the outside diameter is known, and *vice versa*.

It is quite evident, says Mr. Edgar, that the method given by Mr.

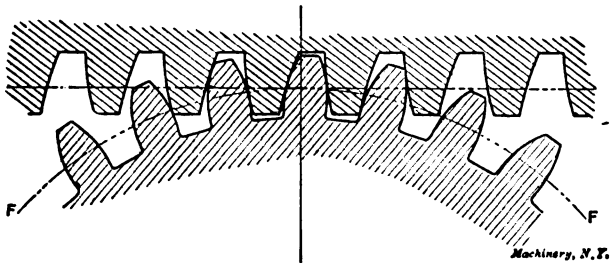

Fig. 18. Section at Line BB, Fig. 14, Pitch Line Determined by Formula (3)

Perrigo for obtaining the pitch diameter of the gear is based on this principle, but it is only an approximation, the variance between its results and those of the formula increasing with the angle a. The difference for the example we have been investigating will be seen in Fig. 14 where G is the line as located by his method, F that by the formula, and E the standard location.

To show the difference this change in location of the pitch line makes in the tooth shape as compared with the usual practice, sections have been drawn at $B\,B$ for both a single- and a triple-threaded worm of 1-inch pitch. Figs. 18 and 19, respectively, show these sections. Here we see that while the faces are yet considerably longer than the flanks, the shape is improved. The difference between Fig. 18 and a normal section is very slight and hardly noticeable, and while the shape in Fig. 19 is somewhat freakish, it has all the properties of a smoothly running gear.

But someone may ask what all this has to do with the durability of the gear. It is this: It has been proved that the friction of approach is much more in amount than that of the release. This friction of approach occurs between the face of the driven gear and the flank of the driver. Now if these particular elements of the tooth are extra long, the friction is proportionately increased over what it

would be in a normal tooth. The friction of motion is always accompanied by wearing of the surfaces in contact; therefore in order to increase the life of the gear, we must decrease the friction to a minimum. This we have done by locating the pitch line in accordance with the formula.

In order to illustrate the extent to which some designers go to eliminate the friction between the surfaces of the teeth in contact, the case of some special forms of clock gearing may be cited where the driver is made with teeth having no flanks and the driven gear with teeth having no faces, fixing all the contact at the period of release. The importance of this point is easily ascertained by observing the wear on the teeth of a pair of gears that run constantly in one direction.

The tooth curves in the above figures were obtained by the tracing cloth method described in Unwin's "Machine Design." The subject in

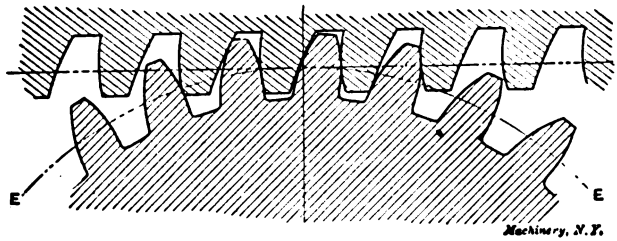

Fig. 19. Section at Line BB, Fig. 14, Pitch Line Determined by Formula (3)

hand, however, does not require or warrant the description of this method here.

Finally, Mr. Ralph E. Flanders added to the discussion by a more fundamental study into the principles involved than had been undertaken by any of the previous writers. His analyzation of the subject clears some of the doubtful points at issue. In order to give a comprehensive idea of his statements, his treatment of the question has been given verbatim in the following*:

On the Location of the Pitch Circle in Worm Gearing

Mr. Perrigo and Mr. Edgar, in their recent contributions on this subject, have called attention to some important points in connection with this form of gearing. The writer feels, however, that the recommendations they make cannot be followed blindly, but must be applied with a full knowledge of the limitations within which these recommendations are useful. It is the purpose of the present article to point out these limitations.

Mr. Perrigo describes a worm and a worm-wheel which he has incorporated in the feed mechanism of a screw machine. Made in the way he describes, this worm and wheel have outlasted everything of their kind in his previous experience, and if the cases with which he mentally compares this one have no other important points of difference,

* MACHINERY, November, 1905.

his confidence is certainly justified. Unfortunately, this point is not covered, and so we are left without a solid foundation on which to base our judgment.

The feed worm of a screw machine, if it is of the class in which the worm is dropped out of engagement when the feed is released, does its work under peculiarly trying circumstances. The writer's experience in screw machine design has led him to believe that the proper proportioning of these parts is a matter of considerable importance. Consider the case of a bronze wheel and a hardened steel worm working under the pressure of a heavy cut: When the worm is released from engagement with the wheel, under the pressure of this heavy cut, the sharp, hardened corner of the worm-tooth goes sliding down the face of its corresponding tooth in the wheel, giving it a last dig as it jumps by the corner. The necessity for quick handling

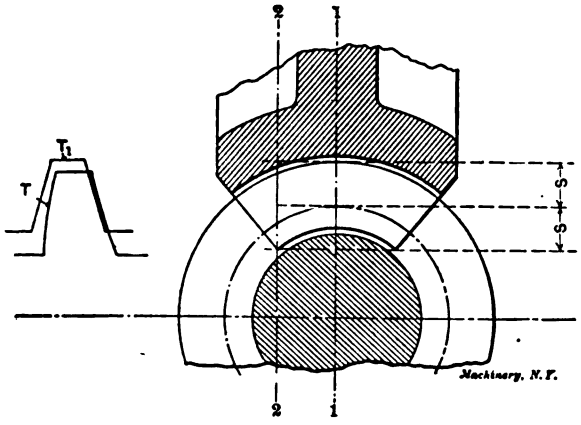

Fig. 20

demands that the momentum of the revolving parts of the feed mechanism be kept as low as possible, so the peripheral speed of the worm-wheel must be as low as possible in comparison with the rate of movement of the slide. This, in turn, requires the worm to work under heavy pressure. It is not practicable to locate the feed release between the worm and the clutch, especially if the feed is to be stopped automatically, because it is difficult to handle a toothed clutch under a severe torsional strain. Usually this problem is settled by a compromise whose success depends on the judgment of the designer; the peripheral speed of the worm-wheel is made as high, and consequently, the worm thrust is made as low as is possible without too great a sacrifice in rapidity of handling. In large machines this difficulty may be overcome by connecting the pinion shaft to the worm-wheel by frictional contact, accomplished by tightening up a supplementary pilot mounted in front of the main pilot wheel; the automatic release is effected by stopping the rotation of the worm.

Another point that militates against the durability of this mechan-

ism when a releasing worm is used, is the indeterminate location of the worm. While it is obvious that a worm cannot be adjusted in a direction parallel to the axis of the worm-wheel, it is not generally realized that the center distance between its axis and that of the wheel cannot be varied without losing the perfect action which exists when the worm is properly located. That this is so will be evident from Fig. 20. In this cut T_1 and T are sections of a worm tooth taken on lines 1-1 and 2-2 respectively,. The section on 1-1 is evidently that of an involute rack tooth and so possesses the characteristic property of correct action at any center distance, so long as its straight face is in contact with the mating gear tooth. As we leave this section, however, and approach section 2-2, the tooth outline gradually loses its resemblance to the involute form and takes a shape in which positive location is absolutely necessary for correct action, as is shown by the curved sides. This variation from the

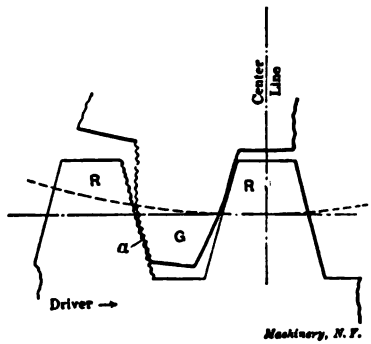

Fig. 21

involute shape is especially marked in worms of large helix angle and consequent high efficiency.

Now, if the worm is slightly separated from its correct location in the mating wheel and no sideways motion is allowed, it will be seen by observing the relative angularity of the outlines of the faces in the curves T and T_1 that the contact will at once lose its character of line contact, extending across the full width of the gear, and will be concentrated in point contact on the extreme outer edge, where correct action is impossible except at the calculated center distance. For working under heavy pressure, then, it is necessary that the worm agree in shape with the hob which cut its mate, and that its axis exactly coincide with that of the hob when this was taking its finishing cut. These requirements may be met easily in high-grade work, such as is the rule in making a worm-gear drive for a gear-cutter spindle or an elevator, but such workmanship is very far from the haphazard fitting that a releasing feed worm must necessarily get.

It has occurred to the writer that the worm, or worms, in Mr. Perrigo's turret lathe, must be of considerably greater helix angle than is usual in feed gearing. The unusual arrangement of a double reduc-

tion is employed, making use of two sets of worms and wheels in series. Unless the feed shaft rotates at high speed, or the feed is exceedingly fine, this must mean that the reduction in each set of gears is small, which in turn predicates a large helix angle and an efficient gear. Mr. Perrigo must, then, give us more definite information if his experience is to be valuable as a permanent record in the matter of the location of the pitch line. Was his machine furnished with a releasing worm for a feed stop, and were the machines with which he compares it so equipped? How carefully was the worm

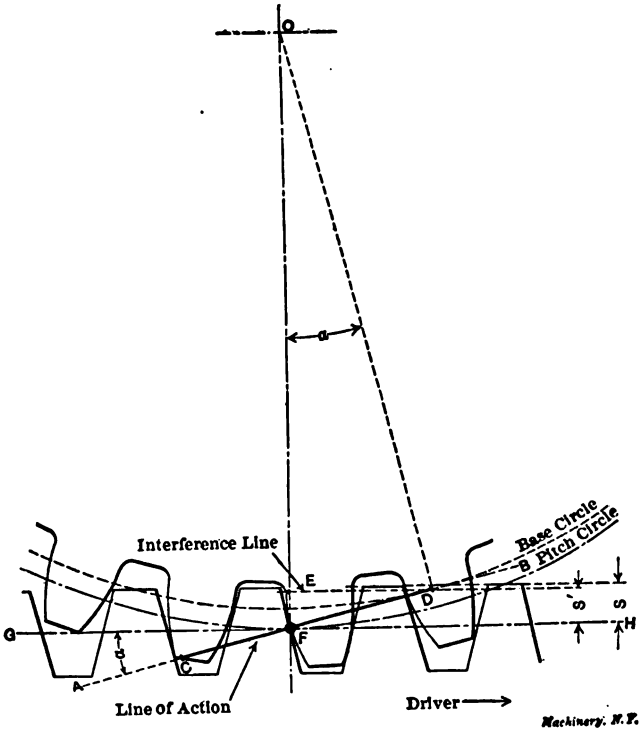

Fig. 22

fitted in the last machine and in the former machines? What are the helix angles of these worms and former unsuccessful cases? What materials were used in the different sets of gears which are under comparison?

Mr. Edgar has shown quite plainly that the advantage to be gained by lessening the diameter of the pitch circle on the worm is due to the fact that in such a case the contact between worm and wheel takes place for the most part after the teeth have begun to recede from each other. In Fig. 22 the worm, with its pitch line at *G H*, driving the wheel in the direction shown, will always make contact with it along the line of action, *C D*. The pitch line is located, as usual, half-

way down the working depth of the tooth, and as may be seen, the contact is almost equally divided on each side of the center line. In Fig. 23, with the same reference letters, the pitch line has been located according to the rule proposed by Mr. Edgar, and the contact between the teeth is seen to take place almost wholly during the time when they are leaving each other.

Friction between two rubbing surfaces is due to the resistance imposed by the microscopic irregularities which exist on even the smoothest surfaces. In Fig. 21 are shown two teeth approaching each other, in which these irregularies are greatly exaggerated. *R* is the driving and *G* is the driven tooth. Evidently if these irregularities were as great as shown, the teeth would lock together and movement would be impossible; on the other hand, if *G* were the driving tooth, and the teeth were separating, there would be little to hinder their free movement. It is, then, desirable that most of the contact should take place when the teeth are leaving each other, to avoid friction, loss of power, and wear of tooth surfaces.

Fig. 20 shows the way in which Mr. Edgar proposes to locate the pitch circle of the worm. This circle is tangent to a line which lies at equal vertical distances from the extreme working points of the worm-wheel tooth, and he locates the pitch line here because it is so located in a spur gear. To the writer it seems that there is no analogy between them. The pitch line of a spur gear is located at one-half the working depth of the tooth because it is required that a set of standard spur gears be interchangeable, a gear of any number of teeth meshing perfectly with a gear of any other number of the same pitch. This requirement is entirely outside of the sphere of worm gearing, so we may locate the pitch line at any point that will give favorable results as regards efficiency and durability.

The location of the pitch line affects the working qualities of the gearing in four ways, at least. With a worm of given diameter and pitch, and a wheel of given number of teeth and angle of contact, it determines the effective working area of the teeth in both members, the strength of the teeth in the wheel, the number of teeth in contact, and the nature of the contact, that is, whether it takes place during the approach or the release.

Fig. 22 shows a central section of a worm and wheel calculated in the usual manner. If a is equal to the pressure angle, and angle FDO is a right angle, a circle drawn from center O through D will be the base circle from which the involute curve is formed, and the line of action—the line in which the working contact between the teeth will take place—will lie in line AB. This line of action will evidently be limited at one end by C, the point where it crosses the outside diameter of the wheel at its throat, and at the other by D, the point where line AB is tangent to the base circle, since the involute does not extend inside of the circle from which it is derived. It is plain, then, that all that part of the wheel tooth which lies inside of the base circle is clearance, and unfit for bearing surface, and that all of the worm tooth which extends above point D, or the "interference line," as it is

marked, serves no useful purpose. This area of the worm tooth extending above the interference line, is seen to be slight for a thirty-tooth wheel of standard design. An inspection of the cut will show that there are always two and sometimes three teeth in contact. The contact takes place about equally each side of the center line, inclining toward the favorable side, since line *F D*, on the release, is somewhat longer than *C F*, on the approach.

In Fig. 23, we may see what effect has been produced by increasing the addendum of the worm, as we are advised to do. In the first place,

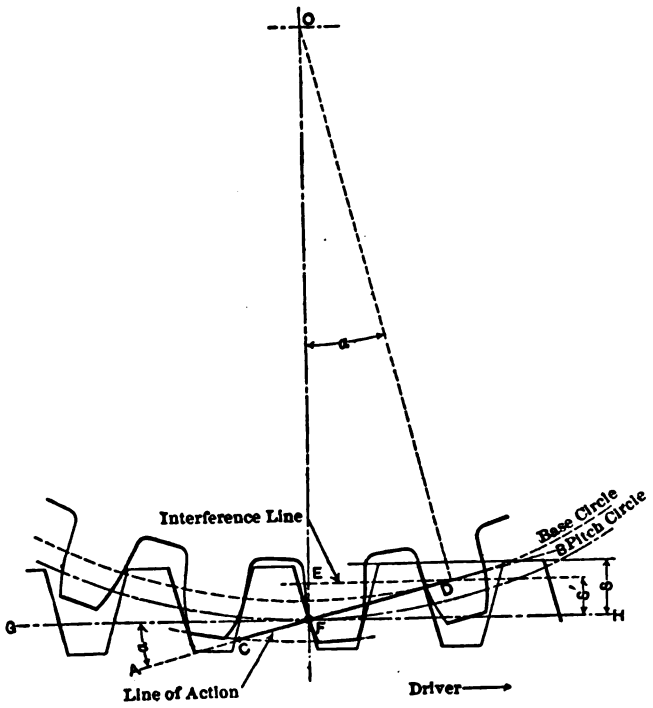

Fig. 23

the interference line, through point *D*, is lowered so far that the useful area of the teeth has been greatly decreased. There is no working contact on the wheel teeth inside of the base circle, nor do the worm teeth serve any useful purpose above the interference line.

The strength of the wheel tooth has been decreased. The great length of useless worm tooth extending above the interference line has cut a deeper clearance into the flank of the wheel tooth, thus weakening it at the very point where it needs strength. On pages 68, 69, and 71, of the Brown & Sharpe "Treatise on Gears," will be found three illustrations which show this point very clearly. One case is that of a twelve-tooth worm-wheel of standard design, which gives a

badly undercut flank. In the next illustration the worm-wheel has been hobbed according to Mr. Edgar's rule, and the result is worse than in the first case. The last illustration shows the pitch line thrown clear to the outside diameter of the worm, this being advised as the proper remedy to secure a tooth of sufficient strength and bearing surface.

Referring again to Fig. 23, the number of teeth in contact has been reduced until there is only one constantly in use, though two are in position to work most of the time. The single gain to be derived in return for the advantages that have been lost lies in the fact that a greater percentage of the line of action lies on the releasing side of pitch point F than before, since FD is noticeably longer than FC.

Of course only the action on the center line has been analyzed. The writer has studied the action at sections made in different places in the worm-wheel face, and it looks as though the conditions at the center line were a fairly good index of what is going on nearer the sides. The line of contact appears to rise slightly toward the outside of the worm as it leaves the center (going toward the leading side of the worm), and then drops again toward the edge of the wheel. On the retreating side of the worm the contact drops continuously. This tends to minimize the effect that the width of the wheel has on the action.

How, then, should the pitch line be located? It seems to the writer that the problem is so involved that in a case of any importance the designer should not trust to any empirical rule, but should plan each case with reference to these four points: area of bearing surface in the teeth, strength of the teeth, number of teeth in contact, and location of contact, whether in the approach or the release. To these should be added a fifth point, more important than any of the others, as far as efficiency is concerned, and that is in relation to the helix angle of the worm: it should be as large as possible.

Taking all these points into consideration, it would seem that, for worms and wheels made as they usually are for ordinary service, from ordinary materials, and with ordinary carefulness of workmanship in making and fitting, it is hardly worth while to bother about changing the location of the pitch line for the sake of having the contact on the release. It introduces too many other complications into the problem. Still, if there is any one who wants to try the effect of altering the worm and wheel dimensions with this end in view, here are a few suggestions in the shape of formulas to add to those of the two contributors who have previously written on this subject.

Let N = number of teeth in wheel.
P' = linear pitch of worm.
O = throat diameter of wheel.
o = outside diameter of worm.
D = pitch diameter of wheel.
d = pitch diameter of worm.
a = pressure angle.

$C = \dfrac{D + d}{2}$ = center distance between the worm and the wheel.

S' = effective height of worm tooth above pitch line (see Fig. 23). An inspection of Fig. 23 will show that S' may be expressed as follows:

$$S' = \frac{D \sin^2 a}{2}$$

If we limit the height of our tooth to this line, thus allowing no interference, we may use the following formulas, it being considered that we have given C, P' and N.

$$D = \frac{N P'}{\pi} \tag{5}$$

$$d = 2C - D \tag{6}$$

$$o = d + D \sin^2 a \tag{7}$$

$$O = D + 1.273 P' - D \sin^2 a \tag{8}$$

For a pressure angle of 14½ degrees and an allowed interference equal to that of a standard worm in mesh with a 25-tooth wheel, these last two formulas will become:

$$o = d + \frac{D}{13} \tag{9}$$

$$O = 0.923 D + 1.273 P' \tag{10}$$

These formulas will give as much of the contact on the release as is possible without too much undercutting; the location of the pitch line will, of course, vary widely. Formulas (7) and (8) (when $a =$ 14½ degrees) are good for any number up to 64 teeth, and Formulas (9) and (10) up to 52 teeth. Above these numbers the formulas would bring the pitch line below the root diameter of the worm, which is needless; so for such cases, Formulas (7), (8), (9), and (10) should be replaced by the following, which will keep the pitch line within the working area of the tooth:

$$o = d + 1.273 P' \tag{11}$$

$$O = D \tag{12}$$

All that has been said in the preceding paragraphs refers only to worms whose tooth outlines show straight sides on an axial section. If, as is often the case with steep-pitched worms, the cutting tool is made with straight sides, but tipped up at an angle to agree with the helical angle of the worm, an axial section will show teeth with curved sides whose shape will depend upon the helical angle. In such a case as this it is impossible to apply any of the rules which govern the action of involute teeth, and the only way to go about the matter of locating the pitch line to suit the ideas of the designer is to make a careful analysis of the tooth action on various sections. This operation would be so troublesome and tiresome as to be impracticable under any ordinary circumstances.

CHAPTER V

THE HINDLEY WORM AND GEAR*

The Hindley type of worm-gear was first used in Hindley's dividing engine,† and was, by the inventor, considered superior to the ordinary type, in wearing quality. Investigation has practically settled that the nature of contact between the worm thread and the teeth of the ordinary worm-wheel is that of line contact, extending across the tooth on the pitch line. It has also been fairly well proved in prac-

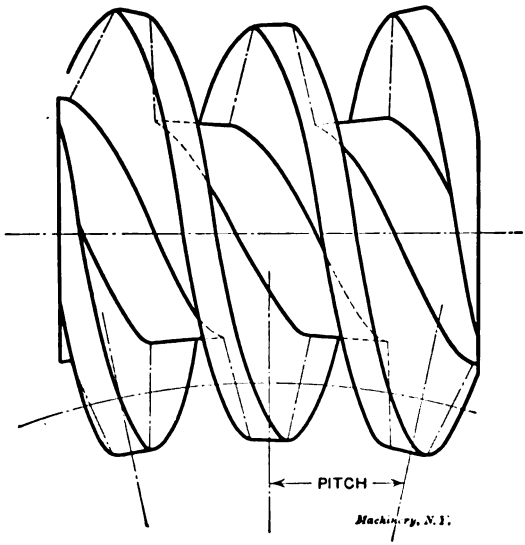

Fig. 24. Typical Hindley Worm

tical examples that the contact is of a broader nature on account of the elasticity of the materials used in the construction. The convex surfaces of contact are flattened considerably under pressure and thus for practical purposes make actual surface contact. The contact in the ordinary worm and worm-wheel type is limited to two teeth of the wheel and worm thread, at most.

Comparison of Ordinary and Hindley Worm Gearing

The conditions are much different in the case of the Hindley worm, and it is the intention in this chapter to show wherein the difference lies. As this style of gearing is uncommon to most of us, a few words

* MACHINERY, December, 1908.

† The Hindley gear, as used in the Hindley dividing engine, is described by Smeaton, also by Willis (Principles of Mechanism, 1851). Various modifications of the Hindley gear, including Jensen's winch, are illustrated in Reuleaux's "Constructor," page 143.

regarding its construction will not be out of place. Fig. 24 illustrates the Hindley worm, showing the theoretical form. This worm is not of cylindrical shape, but is formed somewhat like an hour-glass, after which it is sometimes named. The worm blank, being made smaller in diameter in the middle than at either end, conforms to the circumference of the wheel with which it meshes. The worm thread is cut by a tool which moves in a circular path about a center identical with the axis of the wheel with which it is to mesh, and in the plane in which the axis of the worm lies. The process is similar to ordinary thread cutting in the engine lathe, except for the difference in the path of the tool, the tool having a circular instead of a straight path.

It is evident that the worm shape is dependent on the particular wheel with which it is to run, and Hindley worms are not interchangeable with any other but an exact duplicate. That is, a worm cut for a Hindley gear of 50 teeth cannot be used successfully with a wheel of 70 teeth, although the pitch of the teeth is exactly the same. In the ordinary type of worm gearing, one worm may be made to run with any number of diameters of wheels of the same pitch, and hobbed with the same hob.

In action the two styles of worm-gear differ greatly, and both diverge widely in action from the case of a plain nut and screw, which may be taken to represent a worm and worm-gear, the latter of infinite diameter and with an angle of embrace of 360 degrees. In studying the action between the thread and teeth of the ordinary type of worm-gear, we must understand odontics, rolling contacts and the theory of tooth gearing, in general, in order to understand the action of the ordinary worm-gear. But, in studying the action of the Hindley type, we are concerned with no such theories, as the action is purely sliding and devoid of rolling contact. In the ordinary worm we have an axial pitch which is constant from top to root of the thread, while in the Hindley worm we have a section in which the pitch of the thread varies from top to bottom.

The interference in the ordinary type of worm-gear is absent from the Hindley type, and the consequent undercutting and weakening of the teeth, therefore, is a feature with which the designer of the Hindley worm gearing does not have to contend. For this reason we are not limited in the length of teeth, by interference, as in the ordinary case. This fact permits a wide latitude in the choice of tooth shapes and proportions. In most examples we will find that the depth of thread is much greater in proportion to the thickness than in the ordinary worm-gear, in which the height is limited by reason of the interference at the top and root of the teeth.

Nature of Contact of Hindley Worm Gearing

The general idea of the Hindley worm gearing is that there is surface contact between the worm and gear, and that the contact is generally over the whole number of teeth in mesh. If such were the actual conditions, the Hindley type would surely be an ideal mech-

anism for high velocity ratios, but that such is not the fact is the purpose of this treatise to point out. That the contact is of a superior nature we will not deny, nor that it is much nearer a surface contact than exists in the ordinary worm gear. As a means of comparison, Figs. 25 and 26 are shown. Fig. 25 shows an axial section taken through the worm and gear of the ordinary type, while Fig. 26 shows a similar section through the Hindley worm and gear. The "airy"

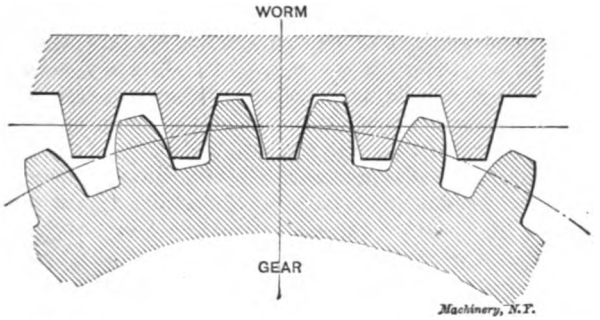

Fig. 25. Section of Common Worm and Worm-wheel on Middle Plane

appearance of Fig. 25 as compared with Fig. 26, indicates a vast difference in the nature of contact, and gives the advantage to the Hindley type, wherein is the origin of certain false ideas in favor of the latter. These illustrations also show peculiar differences in the action of the two types. The absence of rolling action in Fig. 26 is the most prominent, and it shows the similarity between this type of gear and a screw and nut.

From an inspection of Fig. 26 we may feel sure that the contact on

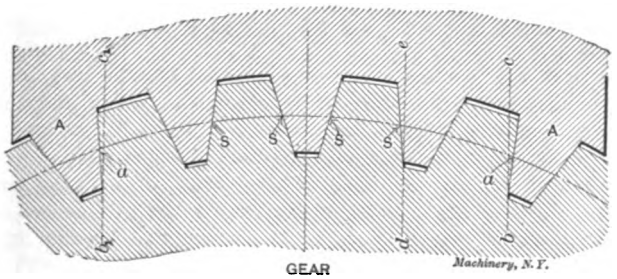

Fig. 26. Section of Hindley Worm and Gear on Middle Plane

the axial plane is as shown, but as to the nature of contact in a plane either side of the middle plane we are in the dark so far as the drawing illustrates. Mr. George P. Grant has this to say concerning the contact of the Hindley worm and gear: "It is commonly but erroneously stated that the worm (Hindley) fits and fills its gear on the axial section. . . . It has even been stated that the contact is between surfaces, the worm filling the whole gear tooth. . . . It is

also certain that it (the contact) is on the normal and not on the axial section, and that the Hindley hob will not cut a tooth that will fill any section of it. The contact may be linear on some line of no great length, but it is probably a point contact on the normal section."

It is not clear what reason Mr. Grant had for saying that the contact is normal instead of axial; but there is every reason to believe that the contact is on the axial section since it is on this section that the teeth of the hob have a common pitch. The teeth have not a common pitch on any section at an angle with the axial section. For what reason would one expect to find contact on the normal section in this case any more than in the case of the ordinary worm? Since both styles of worm-wheels are hobbed with a revolving hob which lies in a plane perpendicular to the axis of the worm-wheel, the contact could hardly be on a normal section.

Prof. MacCord states that he considers the contact to be line contact on the axial section, and he gives directions for obtaining the exact nature of the contact and also the thread and tooth sections. These directions, on account of the complicated nature of the method,

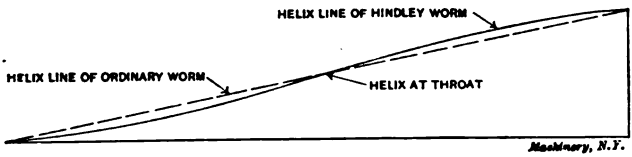

Fig. 27. Development of Ordinary Worm and Hindley Worm Spirals on a Plane

are hard to follow. Much, however, can be found out by simple methods. In what follows, describing these simpler methods, the results, of course, are of an approximate order, but they nevertheless give a means of comparison and a material basis for the line of argument.

The Ideal Case Considered

It is assumed that we are examining an ideal Hindley gear in which the worm and wheel are theoretically correct in shape and that the surfaces are perfectly smooth and inelastic. From the nature of the worm, the helix angle varies from mid-section to the ends, decreasing as the thread approaches the ends of the worm. The thread is spiral as well as helical. This change in the thread angle is caused by the increase in diameter at the ends of the worm and by the fact that the axial pitch of the thread decreases as it reaches the ends. The decrease in axial pitch is due, of course, to the circular path of the threading tool. If we take a development on a flat surface of a line scribed in the spiral path on the worm blank, as shown in Fig. 27, the change in the angle becomes noticeable.

In the operation of forming the teeth of the gear, the blank is rotated, each portion of the hob working the tooth into shape so that it will pass the corresponding portion of the worm thread without interference, permitting a smooth transmission of motion. If each

portion has a different shape or is placed in a different relation, the shape of a gear tooth will be a compromise between the extremes, and this is what is actually the result, as we shall see later.

The progressive steps of the process are shown in Fig. 28; the successive positions of one tooth are shown, beginning at the left and ending at the right-hand position where each tooth is given its final shape. The nature of the process is shown in Fig. 29, the shaded portions representing the gear teeth. Here we have a representation of the contact of the thread and teeth; it shows that surface contact is impossible on any but the heavily shaded portions of the teeth, it being confined to the mid-section and the extreme end sections of the worm. Line contact is obtained throughout the length of the worm on the axial plane. This figure also shows that no advantage is gained in surface contact by making the worm of greater length. The location of the contacts are shown in Fig. 29, at *a*, *s*, *s*, *s*, *s*, *a*, but it

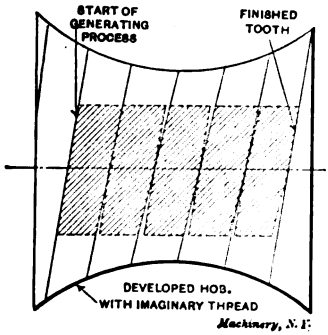

Fig. 28. Successive Steps in Shaping the Hindley Worm

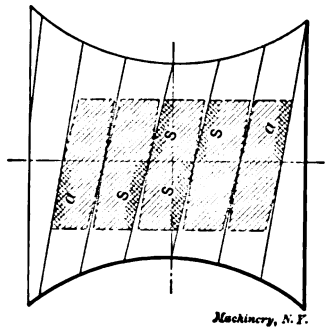

Fig. 29. Surfaces of Contact of the Hindley Worm

must be remembered that they lie on opposite sides of the cutting plane. From this it is apparent that the worm does not entirely fill the space between the teeth of the gear and that the contact is not wholly a surface contact.

Let us investigate still further and see whether the conditions are not modified by other irregularities: Fig. 30 is drawn to represent a worm and gear of the Hindley type, in mesh, the teeth of which have no depth. As before mentioned, the peculiarity of this type of worm is its hour-glass shape. The hob and worm may be treated as identical in form. In the process of generation, the tooth has a pitch line curvature that changes with corresponding positions in relation to the thread portion acting upon it. The tooth must necessarily be modified from what it should be for any particular location in its contact with the worm thread. It is quite clearly shown that if the tooth is to fill the worm thread or *vice versa*, it must be formed in strict accordance with the thread at that particular point. Thus if at *j* the tooth fills the thread, that tooth must be formed by the thread at that point, while the tooth at *k* must be formed by the thread at *k*. Now, since each tooth must pass from *k* to *j*, its form must be such

that it will do so without interference. It is evident that the radial section of the gear at *k* must be the same as at *j*. Since the worm is largest in diameter at *k*, the curvature of the tooth on the radial section is dependent on the thread at that point. The curvature of the tooth at *k* evidently is that of an ellipse whose major axis is $A A_1$. Now, since the thread is made with angular sides, the hob could hardly act on the teeth of the gear the same at all points from *k* to *j* except on the axial plane where the relative shape of the hob thread is the same for any position along the line of action (see Fig. 26). This is evident from Fig. 30 at *E*, which point only touches at the mid-section of the worm. Therefore we still have the line contact from top to bottom of teeth on the axial plane, but the construction, Fig.

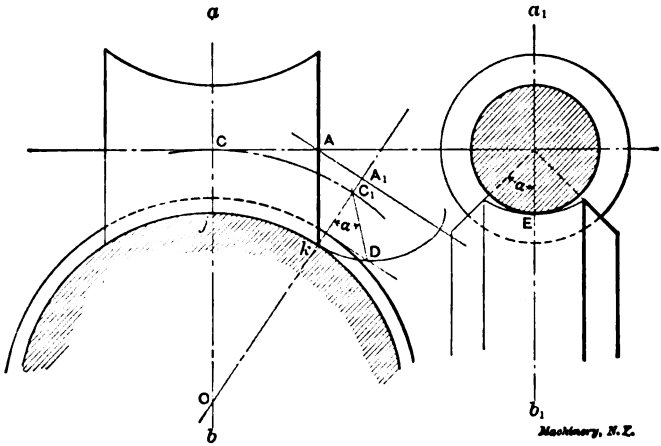

Fig 30. Effect of Hour-glass Shape on Worm-wheel Contact

30, shows that the surface contact *s*, *s*, *s*, *s*, Figs. 26 and 29, does not actually exist, but that the surface contact at the ends of the worm remains undisturbed.

From the above we may safely conclude that the hob at *j* has but little effect on the actual shape of the tooth, and that its influence increases until *k* is reached. Fig. 30 also shows a good reason why the contact may be considered axial instead of normal, by the mere fact of the differences in curvature of worm and wheel at any point other than *k*. In practice the contact may appear to be surface contact, but this, no doubt, is due to the influence of the lubricating oil and the fact that materials of construction are distorted to some extent in form when subjected to pressure. This distortion permits the worm thread to imbed itself into the worm-wheel teeth, somewhat broadening the contact for the time being. The conditions as stated in the above discussion would be met in the case of a hardened worm and gear with surfaces finished by lapping. In practice the worm and gear are ground together, sand and water being used as the abrasive. This grinding wears down the roughness of the surfaces and tends to correct irregularities in form that develop in the hobbing process.

Objections to the Hindley Gear

The objections to the Hindley type of worm-gear are many and are widely known. It must be set up accurately, the alignment being made perfect. End play is a feature that must be avoided, as any longitudinal displacement of the worm will cause the gear to cut. These peculiarities are the greatest drawbacks to the use of this gear, and because of them the writer believes that it will not come into common use, at least not so common as the worm drive of the ordinary type. This opinion is strengthened by the fact that we have become so much more familiar with the latter type as to be able to design and construct drives that work satisfactorily in every respect.

Modifications of Hindley Worm-Gear Practice

Some modifications have been made in the process of manufacturing the Hindley worm-gear. One that is probably of first importance is that known as the "second cut," this practice being generally cred-

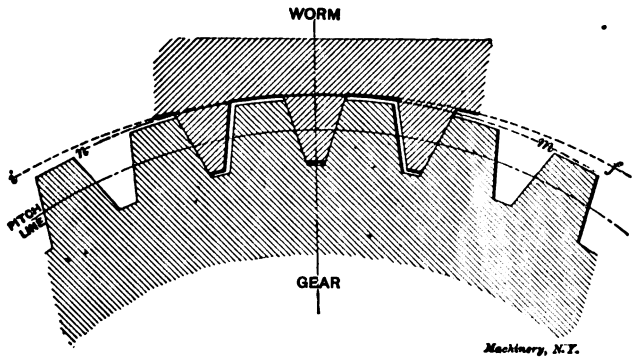

Fig. 31. Effect of the "Second Cut" on Contact

ited to Mr. Albro of Philadelphia, but the credit for it is in dispute. The effect of the second cut is indicated in Fig. 31. From this illustration one would say that the object of the second cut is to remove the points of contact. Whether this is the reason or not, it is a fact that it does remove considerable of the contact from all but the mid-section of the worm. This second cut is made by enlarging the diameter of the circle in which the threading tool travels when cutting the worm. It is said to have advantages that add to the wearing quality of the drive, but just what these advantages are is not apparent, and since the process is considered more or less a trade secret, it is difficult to obtain authentic reasons for its use.

The limiting length of the worm is dependent on the shape of the thread. In Fig. 31 the worm is shown with three teeth in mesh, while Fig. 26 shows five. Fig. 26 shows a case that would be impossible in practice on account of the undercut teeth *A* which lock the worm in mesh. The side of the thread must fall inside the line *b c* to permit the worm and gear to be assembled.

Conclusions Regarding the Hindley Worm and Gear

The following are the author's conclusions, derived from the investigation regarding the Hindley type of gear:

1. The contact is purely sliding contact.
2. The nature of the contact is linear, closely resembling surface contact.
3. Linear contact extends from the top to the root of the tooth.
4. The contact is on the axial section.
5. The thread section fills the tooth space on the axial section only.
6. The mid-portion of the hob has little or no effect in shaping the teeth of the gear.
7. Surface contact exists on opposite sides of the axial plane at the end of the worm thread and is intermittent in nature, because the end of the thread passes out of contact with the tooth in the revolving of the worm. This contact is on a plane normal with the thread angle.

In practice it is usual to allow considerable back-lash between the thread and the tooth of the worm and gear. This play tends to counteract bad workmanship, either in construction or erection.

CHAPTER VI

THE DESIGN OF SELF-LOCKING WORM-GEARS*

The old opinion that the friction and wear of worm-gears are necessarily very great, and that the efficiency is necessarily very low, making worm gearing an unmechanical contrivance, is not as frequently met with now as formerly. In Unwin's Machine Design it is stated that in well fitted worm gearing, of speed ratios not exceeding 60 or 80 to 1, motion will be transmitted backwards from the wheel to the worm. In Prof. Forrest R. Jones' work on machine design may be found tabulated the results of many examples from practice, some of which show an efficiency as high as 74 per cent before abrasion began, the most notable example being that of a worm running at a surface speed of 306 feet per minute under a load of 5,558 pounds, and showing an efficiency of 67 per cent, with no abrasion. The tables in Prof. Jones' work show that under light loads very high surface or rubbing speeds are allowable, running as high as 800 feet per minute. It has also been pointed out that an increase in the thread angle, in general, increases the efficiency.

There is, however, an important function of worm gearing which is not, as a rule, brought out adequately by writers on worm gearing, and which in certain classes of machinery is of the first importance; often, indeed, becoming the determining factor in deciding upon the choice of a worm-gear as the power transmitter. It is the property a worm-gear possesses, under certain conditions dependent upon its design, of being self-locking, and preventing motion backwards.

An instance where this property becomes of prime importance and accounts for the use of the worm-gear, is in crane work, where the winding drum is driven by a worm-gear so designed that, when the power is shut off, the gear will not run down or backwards under the impulse of the load, but will be self-locking, holding the load at any point.

Fig. 32 shows a single thread worm in mesh with the worm-wheel, α being the angle of the worm thread with the axis of the worm-wheel, and in order that the system may be self-locking, that is, that the worm-wheel may be unable to run the worm, the tangent of the angle α must be less than the coefficient of friction between the teeth of the worm and wheel, or as

$$\tan \alpha = \frac{p}{\pi d}, \text{ so } \frac{p}{\pi d} < f \qquad (1)$$

in which p = the pitch; d = the pitch diameter of the worm; and f = the coefficient of friction between the worm and wheel. It is neces-

* MACHINERY, December, 1902.

sary to assume a value for f, which, if the condition of determining the use of the worm-gear is its self-locking property, should be assumed conservatively low. Unwin states under the authority of Prof. Briggs, that a well-fitted worm-gear will exhibit a lower coefficient of friction than any other kind of running machinery. Prof. Jones gives a series of values for the coefficient of friction of screw gears, one of which is a pinion of 4 inches pitch diameter, the average value being $f = 0.05$, corresponding to a rubbing velocity of 250 feet per minute. Mr. Halsey assumes $f = 0.05$, and Mr. Wilfred Lewis says that when the worm-gear is worked up to the limit of its safe strength, a rubbing velocity greater than 200 to 300 feet per minute will prove bad practice. It is in heavy machinery where worm-gears are mostly used as self-locking transmission elements, and here they are usually worked up to the safe strength of the wheel; hence it is fair to assume $f = 0.05$

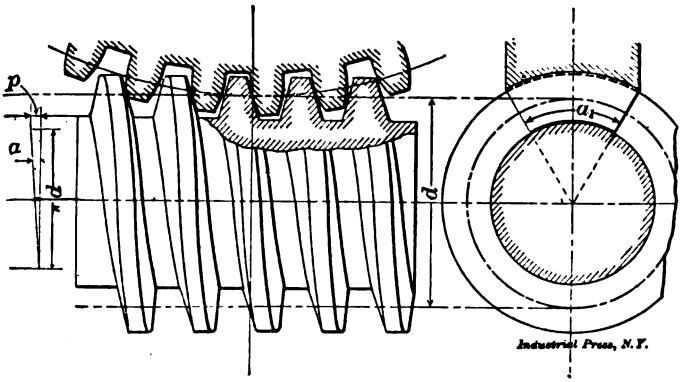

Fig. 32

when designing a self-locking worm-gear, and to limit the rubbing velocity to 200 feet per minute, and we have for the limiting value of p at which the system will be self-locking:

$$p = 0.05\,\pi\,d = 0.157\,d \qquad (2)$$

The sliding velocity in feet per minute at the pitch line is expressed by

$$V = \frac{\pi\,d\,n}{12} = 0.262\,d\,n \qquad (3)$$

where d = the pitch diameter of the worm, and n = the number of revolutions per minute of the worm.

Under the above assumption, that for continuous service and heavy pressures the sliding velocity should not be more than 200 feet per minute, we have as the limiting value of d to avoid all cutting:

$$d = \frac{200}{0.262\,n}.$$

The exact nature of the surface of contact between a worm and wheel is involved in doubt; many claim it is only a point; it certainly is not large, and consequently a wide face for the wheel is not needed

If the angle a, is made 60 degrees, it will make the face right for any ordinary worm of 4 to 6 inches diameter.

There is in all worm gearing a very heavy end thrust on the worm-shaft, and also an outward force normal to the worm-axis, each of which must be suitably provided for in the design of the shaft and bearings. The end thrust may be taken by bronze washers slipped into the bearings at the end of the shaft, which may be removed when worn and replaced with new ones. Shoulders may be provided on the shaft, between which and the bearings bronze collars may be placed, these being split to enable new ones to be easily and quickly placed in position when the old ones become worn. Roller thrust bearings are very often applied to worms, and these as well as the bronze washers may be supplied with adjusting set-screws to take up the wear, instead of renewing the washers.

In Fig. 33 let P = the tangential force at the pitch line of the worm, d = the pitch diameter of the worm, Q = the tangential force at the

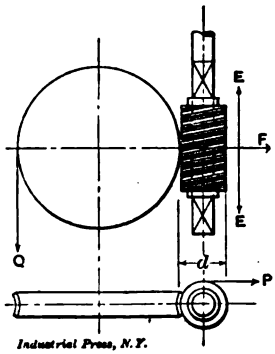

Fig. 33

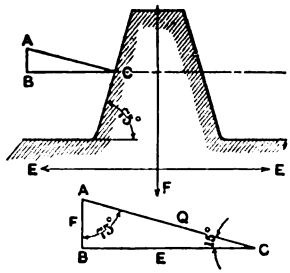

Fig. 34

pitch line of the worm-wheel, E = the end thrust of the worm-shaft, F = the force on the worm-shaft normal to the worm-axis; then, friction being neglected,

$$Q = \frac{P \pi d}{p} \tag{4}$$

In Fig. 34 let the force Q be represented by the line $A\,C$ normal to the tooth side of the worm at the pitch line; draw $A\,B$ normal to the axis of the worm, and $B\,C$ parallel to the axis or coincident with the pitch line of the worm; then, when measured to the same scale to which $A\,C$ was drawn, $A\,B = F$, and $B\,C = E$. As the angle $C\,A\,B$ is 75 deg. (for the 15 deg. involute system) we have,

$$\frac{F}{Q} = \sin 15 \text{ deg., and } F = 0.259\,Q \tag{5}$$

$$\frac{E}{Q} = \cos 15 \text{ deg., and } E = 0.966\,Q \tag{6}$$

Taking friction into consideration, the force P_1, tangential to the pitch

line of the worm, which it is necessary to employ in order to produce a force Q tangential to the pitch line of the wheel, is given by Weisbach as

$$P_1 = Q\frac{h+f}{1-hf} \tag{7}$$

in which

$$h = \frac{p}{\pi d}$$

The efficiency of the worm and wheel is then,

$$\frac{P}{P_1} = e \tag{8}$$

Example: A single thread worm of 1-inch pitch, running 80 revolutions per minute, is to transmit to a worm-wheel a tangential force $Q = 5{,}000$ pounds, and is to be self-locking.

From (3)

$$d < \frac{200}{0.262 \times 80},$$

or d may be as large as 9.5 inches before abrasion need be feared.

From (2)

$$p < 0.157\ d;\ \text{assume } p = 0.125\ d,$$

then, as $p = 1$ inch, $d = 8$ inches, or the worm will require to be 8 inches pitch diameter in order that the angularity of the thread may be small enough to make the system self-locking. It will be seen that the required diameter will be increased as the value of f is decreased, and in case the required diameter of the worm proves too great for practice, and the pitch cannot be reduced on account of considerations of strength, some outside aid, such as a brake or friction disk applied to the worm-shaft, will have to be adopted.

From (7)

$$\text{as } h = \frac{p}{\pi d} = \frac{1}{3.14 \times 8} = 0.04, \text{ we have}$$

$$P_1 = 5{,}000\frac{0.04 + 0.05}{1 - (0.04 \times 0.05)} = 451 \text{ pounds.}$$

From (4)

$$5{,}000 = \frac{3.14 \times 8 \times P}{1}, \text{ or } P = 199 \text{ pounds.}$$

From (8)

$$\frac{P}{P_1} = \frac{199}{451} = 44 \text{ per cent for the efficiency of the worm-gear.}$$

The formulas may, by starting with those for the efficiency, be used to determine the pitch diameter which will give the proper thread angle for any given pitch and degree of efficiency.

It is clear from the foregoing, that a worm-gear of large pitch will require a pitch diameter of the worm altogether too large for practice, if it is to be self-locking, and that the system as usually designed may be expected to run backwards. To prevent this, a friction disk may

be placed in the bearing which receives the thrust of the worm-shaft when the system is running backwards, and the diameter of the disk so proportioned as to just hold the worm-shaft stationary under the impulse of the worm-wheel.

The foregoing discussion neglects the effect of the thrust of the worm-shaft in its bearings, the frictional resistance of which must be added to that of the teeth to obtain the actual conditions of a self-locking system. This frictional resistance depends upon the values of the end thrust E and the normal force F already found, and the diameter and form of the bearing. In nearly all cases of worm gearing the mounting of the worm upon the shaft will be covered by one

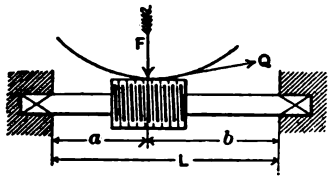

Fig. 35

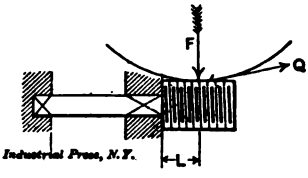

Fig. 36

of three cases, either unsymmetrically between the bearings, symmetrically between the bearings, or over-hung.

In Case 1, Fig. 35, the bending moment upon the worm shaft is,

$$M = \frac{F\,a\,b}{L} = \frac{0.259\,Q\,a\,b}{L} \qquad (9)$$

In Case 2, same as Case 1, except that the worm is central between the bearings, and

$$a = b = \frac{L}{2}$$

the bending moment upon the worm-shaft is,

$$M = \frac{0.259\,Q\,L}{4} = 0.0647\,Q\,L \qquad (10)$$

In Case 3, Fig. 36, the bending moment upon the worm-shaft is,

$$M = F\,L = 0.259\,Q\,L \qquad (11)$$

In each of the above cases the shaft is subjected to a combined twisting and bending strain, the twisting moment being the same in each case, $T = P\,R$, which is, however, so small as to be negligible in what follows.

In the following table the first column shows the several styles of journals most commonly used for worm-shafts, the second column gives the moment of friction for each under a load in the direction of the arrow, the third column gives the coefficient of friction assumed, and the fourth column gives the tangential force P_2 at the pitch line of the worm, resulting from the resistance of friction in the journals, and found by dividing the moment of friction in Column 2 by the pitch radius of the worm.

There are always acting upon the worm-shaft the two forces F and

E; consequently to get the resultant retarding force tangential to the pitch line of the worm, we must take the sum of the resultants due to the frictional resistance of each force separately. Referring to the table, we will, for each worm-shaft, find the conditions shown at A, in addition to the conditions shown either at B, C or D, as the case may be, and the total resultant force P_2 at the worm pitch line will be the sum of the quantities given in Column 4 opposite the particular cases.

These frictional resistances developed by the journals act in a direction helpful to the self-locking property of the worm, and enable the designer to use a larger thread angle for a given diameter of worm,

TABLE GIVING MOMENT OF FRICTION WITH VARIOUS TYPES OF BEARINGS

Style of Journal.	Moment of Friction.	f	Moment of Friction / R
A 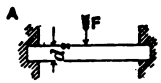	$\frac{f F d_2}{2}$	.05	$\frac{.04 P d_2}{p}$
B 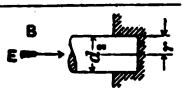	$\frac{2 f E r}{3}$	.05	$\frac{.2 P r}{p} = \frac{.1 P d_2}{p}$
C 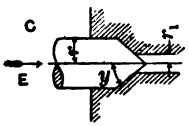	$\frac{2 f E (r^3 - r_1^3)}{3 r \sin. y}$	.05	$\frac{.2 P (r^3 - r_1^3)}{p r \sin. y}$
D 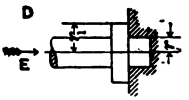	$\frac{2 f E (r_1^3 - r^3)}{3 (r_1^2 - r^2)}$	.05	$\frac{.2 P (r_1^3 - r^3)}{r_1^2 - r^2}$

or a smaller diameter of worm for a given thread angle, thus keeping within the limits of good practice, and increasing the efficiency of the system for the forward movement.

Having determined the force P_2 tangential to the worm pitch line, resulting from the frictional moment at the journals, the angle of repose for this force acting with the force Q, as shown in Fig. 37, is given by the equation,

$$\tan x = \frac{P_2}{Q}.$$

The thread angle found previous to the consideration of the effect of the journal friction may now be increased by the angle x, making the thread angle $a + x$. This may be accomplished either by increasing the thread angle, increasing the pitch, or decreasing the pitch diameter.

Consider, now, that in the foregoing example, the worm-shaft is of

the form in Case 2, the worm being central between the bearings, and the distance between bearings being 36 inches.

Then, from (5) we have,

$$F = 0.259 \times 5{,}000 = 1{,}295 \text{ pounds,}$$

and from (6)

$$E = 0.966 \times 5{,}000 = 4{,}830 \text{ pounds.}$$

From (10)

$$M = \frac{0.259 \times 5{,}000 \times 36}{4} = 11{,}655 \text{ inch-pounds.}$$

Assuming $s = 10{,}000$ pounds per square inch for the allowable fiber stress in the worm-shaft, we have

$$M = \frac{\pi}{32} d_2^3 s \text{ or } d_2 = 2.28 \text{ inches.}$$

From the table, Case A,

$$P_1 = \frac{0.04 \times 199 \times 2.28}{1} = 18.15 \text{ pounds.}$$

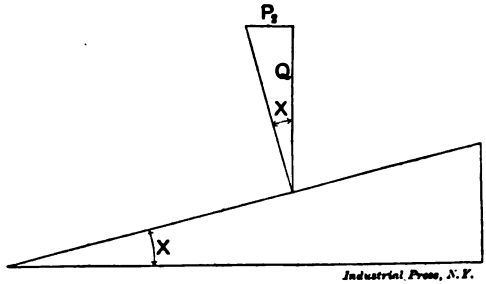

Fig. 37

From the table, Case B,

$$P_1 = \frac{0.1 \times 199 \times 2.28}{1} = 45.37 \text{ pounds.}$$

Then

$$P_2 = 18.15 + 45.37 = 63.52 \text{ pounds.}$$

$$\tan x = \frac{63.52}{5{,}000} = 0.0127$$

$$x = 0 \text{ deg. } 44 \text{ min.}$$

From (1)

$$\tan a = \frac{1}{3.14 \times 8} = 0.04$$

$$a = 2 \text{ deg. } 17 \text{ min.}$$

Then

$$a + x = 3 \text{ deg. } 1 \text{ min.}$$

$$\tan 3 \text{ deg. } 1 \text{ min.} = 0.053$$

$$\frac{p}{\pi d} = 0.053 = h, \text{ and } d = 6 \text{ inches, approx.}$$

If, now, we substitute these new values of h and d in equations (7) and (4), we continue as follows:

From (7)

$$P_1 = 5{,}000\ \frac{0.053 + 0.05}{1 - (0.053 \times 0.05)} = 516 \text{ pounds.}$$

From (4)

$$5{,}000 = \frac{P \times 3.14 \times 6}{1}, \text{ or } P = 265 \text{ pounds.}$$

From (8)

$$\frac{P}{P_1} = \frac{265}{516} = 51 \text{ per cent efficiency for the worm-gear.}$$

The total efficiency of the system, taking account of the journal friction, will be

$$\frac{P}{P_1 + P_2} = \frac{265}{516 + 63.52} = 46 \text{ per cent.}$$

It thus becomes clear that while the efficiency of the worm threads and wheel teeth has been increased above 50 per cent, the efficiency of the whole system, including the journals, is below 50 per cent, and the system retains its self-locking property. It is evident that when running forward, the end thrust E upon the worm-shaft will be upon the opposite end from that when running backward, and on this account a system may be designed to have a high efficiency on the forward movement and still preserve its self-locking property.

If both the journals have roller bearings, and the end taking the thrust on the forward movement has a ball bearing, while the opposite end be made like Case C or D in the table, properly proportioned, the worm may be designed to show a very high efficiency on the forward movement, while the frictional resistance of the step bearing on the opposite end will cause the system to be self-locking by reason of the energy absorbed at the step bearing.

The formulas may be put into more convenient form for this purpose, as follows:

The designer will have, to start with, a knowledge of the force Q required at the worm-wheel, the force P_1 at the pitch line of the worm, developed from the source of power, the pitch required for the worm-wheel, and the efficiency e for which he wishes to design the system. We then have,

$$\frac{P}{P_1} = e, \text{ and } P = P_1 e.$$

Substituting this value for P in equation (4) and solving for d, we have

$$d = \frac{p Q}{3.14 P_1 e}$$

for the worm, neglecting the journals, when the journals and thrust bearings are roller and ball bearings, respectively, and

$$d = \frac{p Q}{3.14 (P_1 - P_2) e}$$

when the journals and thrust bearings are considered.

The worm being thus designed for the given efficiency on the forward movement, it remains to determine such proportions of the step bearing for the backward movement as will present enough frictional resistance to render the system self-locking. Let e_1 = the efficiency when the journals and thrust are considered, then

$$\frac{P}{P_1 + P_2} = e_1 \text{ or } P = e_1 (P_1 + P_2)$$

and substituting the value of P found above

$$e P_1 = e_1 P_1 + e_1 P_2$$

and

$$P_2 = \frac{P_1 (e - e_1)}{e_1}.$$

By equating this force P_2 to the proper quantity from Column 4 in the table of journal resistances, the proportions required of the journal or step bearing may be determined.

Theoretical Efficiency of Worm Gearing

The following table gives the theoretical efficiency of worm gearing for a number of different coefficients of friction. Practical experiments carried out by the Oerlikon Company, Oerlikon by Zürich, Switzerland, agree closely with the results from theoretical calculations given in the table. These experiments indicate that the efficiency increases

TABLE GIVING THEORETICAL EFFICIENCY OF WORM GEARING.

Coefficient of Friction.	Angle of Inclination.								
	5 deg.	10 deg.	15 deg	20 deg.	25 deg.	30 deg.	35 deg	40 deg	45 deg
0.01	89.7	94.5	96.1	97.0	97.4	97.7	97.9	98.0	98.0
0.02	81.3	89.5	92.6	94.1	95.0	95.5	95.9	96.0	96.1
0.03	74.3	85.0	89.2	91.4	92.7	93.4	93.9	94.1	94.2
0.04	68.4	80.9	86.1	88.8	90.4	91.4	92.0	92.2	92.3
0.05	63.4	77.2	83 1	86.3	88.2	89.4	90.1	90.4	90.5
0.06	59.0	73.8	80.4	84 0	86.1	87.5	88.2	88.6	88.7
0.07	55.2	70 7	77 8	81.7	84.1	85 6	86.4	86.9	86 9
0.08	51.9	67.8	75.4	79 6	82 2	83.8	84.7	85.2	85.2
0.09	48.9	65.2	73.1	77.6	80.3	82.0	83.0	83.5	83.5
0.10	46.3	62.7	70.9	75.6	78.5	80 3	81.4	81.9	81.8

with the angle of inclination, up to a certain point. They also show that for larger angles of inclination than 25 degrees to 30 degrees the efficiency increases very little, especially if the coefficient of friction is small, and this fact is of importance in practice, because, for reasons of gear ratio and conditions of a constructive nature, an angle greater than 30 degrees cannot be employed. The coefficient of friction increases with the load and diminishes to a certain extent with increase of speed. Besides the friction between the worm and the wheel teeth, there is also the friction of the spindle bearings and the ball bearings for taking the axial thrust. To obtain the best results,

there must be very careful choice of dimensions of teeth, of the stress between them, and the angle of inclination. To show what can be done, the following are the results of a test with an Oerlikon worm-gear for a colliery winding engine: The motor gave 30 brake horse-power to 40 brake horse-power at 780 revolutions. The normal load was 25 brake horse-power, but at starting it could develop 40 brake horse-power. The worm-gear ratio was 13.6 to 1, the helicoidal bronze wheel having 68 teeth on a pitch circle of 7.283 inches, and the worm 5 threads. The power required at no load for the whole mechanism was 520 watts, corresponding to 2.8 per cent of the normal. The efficiency at one-third normal load gave 90 per cent, at full load 94½, and at 50 per cent overload 93 per cent. The efficiency of the *worm and wheel* alone is higher, and knowing the no-load power, is calculated to be 97½ per cent. According to the table given, of theoretical efficiencies, this gives the coefficient of friction as 0.01. To obtain a reduction of 13.6 to 1 with spur gears would have necessitated two pinions and two wheels with their spindles and bearings, and if the bearing friction was taken into consideration, the efficiency of such gearing would certainly not have reached the above-mentioned figure of 94½ per cent at full load. These figures, of course, seem very high for the efficiency of worm gearing. They were published in MACHINERY, December, 1903, having been obtained from a reliable source, and were never challenged.

No. 39. Fans, Ventilation and Heating.—Fans; Heaters; Shop Heating.

No. 40. Fly-Wheels.—Their Purpose, Calculation and Design.

No. 41. Jigs and Fixtures, Part I.—Principles of Jig and Fixture Design; Drill and Boring Jig Bushings; Locating Points; Clamping Devices.

No. 42. Jigs and Fixtures, Part II.—Open and Closed Drill Jigs.

No. 43. Jigs and Fixtures, Part III.—Boring and Milling Fixtures.

No. 44. Machine Blacksmithing.—Systems, Tools and Machines used.

No. 45. Drop Forging.—Lay-out of Plant; Methods of Drop Forging; Dies.

No. 46. Hardening and Tempering.—Hardening Plants; Treating High-Speed Steel; Hardening Gages; Hardening Kinks.

No. 47. Electric Overhead Cranes.—Design and Calculation.

No. 48. Files and Filing.—Types of Files; Using and Making Files.

No. 49. Girders for Electric Overhead Cranes.

No. 50. Principles and Practice of Assembling Machine Tools, Part I.

No. 51. Principles and Practice of Assembling Machine Tools, Part II.

No. 52. Advanced Shop Arithmetic for the Machinist.

No. 53. Use of Logarithms and Logarithmic Tables.

No. 54. Solution of Triangles, Part I.—Methods, Rules and Examples.

No. 55. Solution of Triangles, Part II.—Tables of Natural Functions.

No. 56. Ball Bearings.—Principles of Design and Construction.

No. 57. Metal Spinning.—Machines, Tools and Methods Used.

No. 58. Helical and Elliptic Springs.—Calculation and Design.

No. 59. Machines, Tools and Methods of Automobile Manufacture.

No. 60. Construction and Manufacture of Automobiles.

No. 61. Blacksmith Shop Practice.—Model Blacksmith Shop; Welding; Forging of Hooks and Chains; Miscellaneous Appliances and Methods.

No. 62. Hardness and Durability Testing of Metals.

No. 63. Heat Treatment of Steel.—Hardening, Tempering and Case-Hardening.

No. 64. Gage Making and Lapping.

No. 65. Formulas and Constants for Gas Engine Design.

MACHINERY'S DATA SHEET SERIES

MACHINERY'S Data Sheet Books include the well-known series of Data Sheets originated by MACHINERY, and issued monthly as supplements to the publication; of these Data Sheets over 500 have been published, and 6,000,000 copies sold. Revised and greatly amplified, they are now presented in book form, kindred subjects being grouped together. The purchaser may secure either the books on those subjects in which he is specially interested, or, if he pleases, the whole set at one time. The price is 25 cents a book.

The reliability of MACHINERY'S Data Sheets has been fully established by years and years of actual use in machine-building plants and drafting-rooms everywhere. The number of corrections it was found necessary to make in the old Data Sheets during the thorough editorial revision preceding publication in book form was relatively insignificant; but the value of the original Data Sheets has been greatly enhanced by the additional new material, never before published, by the careful arrangement and grouping together of kindred subjects, and by the helpful explanatory notes. It is the aim of the publishers to make these books absolutely authentic as reference books, notwithstanding the low price at which they are sold.

In combination with MACHINERY'S Reference Series these Data Sheet Books offer draftsmen, mechanical engineers and machinists an unusual opportunity to secure a complete working library of indispensable material.

CONTENTS OF DATA SHEET BOOKS

No. 1. Screw Threads.—United States, Whitworth, Sharp V- and British Association Standard Threads; Briggs Pipe Thread; Oil Well Casing Gages; Fire Hose Connections; Acme Thread; Worm Threads; Metric Threads; Machine, Wood, and Lag Screw Threads; Carriage Bolt Threads, etc.

No. 2. Screws, Bolts and Nuts.—Fillister-head, Square-head, Headless, Collar-head and Hexagon-head Screws; Standard and Special Nuts; T-nuts, T-bolts and Washers; Thumb Screws and Nuts; A. L. A. M. Standard Screws and Nuts; Machine Screw Heads; Wood Screws; Tap Drills; Lock Nuts; Eye-bolts, etc.

No. 3. Taps and Dies.—Hand, Machine, Tapper and Machine Screw Taps; Taper Die Taps; Sellers Hobs; Screw Machine Taps; Straight and Taper Boiler Taps; Stay-bolt, Washout, and Patch-bolt Taps; Pipe Taps and Hobs; Solid Square, Round Adjustable and Spring Screw Threading Dies.

(See back cover for additional titles)

No. 4. Reamers, Sockets, Drills and Milling Cutters.—Hand Reamers; Shell Reamers and Arbors; Pipe Reamers; Taper Pins and Reamers; Brown & Sharpe, Morse and Jarno Taper Sockets and Reamers; Drills; Wire Gages; Milling Cutters; Setting Angles for Milling Teeth in End Mills and Angular Cutters, etc.

No. 5. Spur Gearing.—Diametral and Circular Pitch; Dimensions of Spur Gears; Tables of Pitch Diameters; Odontograph Tables; Rolling Mill Gearing; Strength of Spur Gears; Horsepower Transmitted by Cast-iron and Rawhide Pinions; Design of Spur Gears; Weight of Cast-iron Gears; Epicyclic Gearing.

No. 6. Bevel, Spiral and Worm Gearing.—Rules and Formulas for Bevel Gears; Strength of Bevel Gears; Design of Bevel Gears; Rules and Formulas for Spiral Gearing; Tables Facilitating Calculations; Diagram for Cutters for Spiral Gears; Rules and Formulas for Worm Gearing, etc.

No. 7. Shafting, Keys and Keyways.—Horsepower of Shafting; Diagrams and Tables for the Strength of Shafting; Forcing, Driving, Shrinking and Running Fits; Woodruff Keys; United States Navy Standard Keys; Gib Keys; Milling Keyways; Duplex Keys.

No. 8. Bearings, Couplings, Clutches, Crane Chain and Hooks.—Pillow Blocks; Babbitted Bearings; Ball and Roller Bearings; Clamp Couplings; Plate Couplings; Flange Couplings; Tooth Clutches; Crab Couplings; Cone Clutches; Universal Joints; Crane Chain; Chain Friction; Crane Hooks; Drum Scores.

No. 9. Springs, Slides and Machine Details.—Formulas and Tables for Spring Calculations; Machine Slides; Machine Handles and Levers; Collars; Hand Wheels; Pins and Cotters; Turn-buckles, etc.

No. 10. Motor Drive, Speeds and Feeds, Taper Turning, and Boring Bars.—Power required for Machine Tools; Cutting Speeds and Feeds for Carbon and High-speed Steel; Screw Machine Speeds and Feeds; Heat Treatment of High-speed Steel Tools; Taper Turning; Change Gearing for the Lathe; Boring Bars and Tools, etc.

No. 11. Milling Machine Indexing, Clamping Devices and Planer Jacks.—Tables for Milling Machine Indexing; Change Gears for Milling Spirals; Angles for setting Indexing Head when Milling Clutches; Jig Clamping Devices; Straps and Clamps; Planer Jacks.

No. 12. Pipe and Pipe Fittings.—Pipe Threads and Gages; Cast-iron Fittings; Bronze Fittings; Pipe Flanges; Pipe Bends; Pipe Clamps and Hangers; Dimensions of Pipe for Various Services, etc.

No. 13. Boilers and Chimneys.—Flue Spacing and Bracing for Boilers; Strength of Boiler Joints; Riveting; Boiler Setting; Chimneys.

No. 14. Locomotive and Railway Data.—Locomotive Boilers; Bearing Pressures for Locomotive Journals; Locomotive Classifications; Rail Sections; Frogs, Switches and Cross-overs; Tires; Tractive Force; Inertia of Trains; Brake Levers; Brake Rods, etc.

No. 15. Steam and Gas Engines.—Saturated Steam; Steam Pipe Sizes; Steam Engine Design; Volume of Cylinders; Stuffing Boxes; Setting Corliss Engine Valve Gears; Condenser and Air Pump Data; Horsepower of Gasoline Engines; Automobile Engine Crankshafts, etc.

No. 16. Mathematical Tables.—Squares of Mixed Numbers; Functions of Fractions; Circumference and Diameters of Circles; Tables for Spacing off Circles; Solution of Triangles; Formulas for Solving Regular Polygons; Geometrical Progression, etc.

No. 17. Mechanics and Strength of Materials.—Work; Energy; Centrifugal Force; Center of Gravity; Motion; Friction; Pendulum; Falling Bodies; Strength of Materials; Strength of Flat Plates; Ratio of Outside and Inside Radii of Thick Cylinders, etc.

No. 18. Beam Formulas and Structural Design.—Beam Formulas; Sectional Moduli of Structural Shapes; Beam Charts; Net Areas of Structural Angles; Rivet Spacing; Splices for Channels and I-beams; Stresses in Roof Trusses, etc.

No. 19. Belt, Rope and Chain Drives.—Dimensions of Pulleys; Weights of Pulleys; Horsepower of Belting; Belt Velocity; Angular Belt Drives; Horsepower transmitted by Ropes; Sheaves for Rope Drive; Bending Stresses in Wire Ropes; Sprockets for Link Chains; Formulas and Tables for Various Classes of Driving Chain.

No. 20. Wiring Diagrams, Heating and Ventilation, and Miscellaneous Tables.—Typical Motor Wiring Diagrams; Resistance of Round Copper Wire; Rubber Covered Cables; Current Densities for Various Contacts and Materials; Centrifugal Fan and Blower Capacities; Hot Water Main Capacities; Miscellaneous Tables; Decimal Equivalents, Metric Conversion Tables, Weights and Specific Gravity of Metals, Weights of Fillets, Drafting-room Conventions, etc.

MACHINERY, the monthly mechanical journal, originator of the Reference and Data Sheet Series, is published in four editions—the *Shop Edition*, $1.00 a year; the *Engineering Edition*, $2.00 a year; the *Railway Edition*, $2.00 a year, and the *Foreign Edition*, $3.00 a year.

The Industrial Press, Publishers of MACHINERY,

49-55 Lafayette Street, New York City, U. S. A.

MACHINERY'S REFERENCE SERIES

EACH PAMPHLET IS ONE UNIT IN A COMPLETE LIBRARY OF MACHINE DESIGN AND SHOP PRACTICE REVISED AND REPUBLISHED FROM MACHINERY

No. 2

A Dollar's Worth of Condensed Information

Drafting-Room Practice

THIRD EDITION

Price 25 Cents

CONTENTS

Drafting-Room System, by RALPH E. FLANDERS - 3
Tracing, Lettering and Mounting, by I. G. BAYLEY 17
Card Index Systems, by A. L. VALENTINE, J. S. WATTS and A. B. HOWK - - - - - - 34

The Industrial Press, 49-55 Lafayette Street, New York
Publishers of MACHINERY

COPYRIGHT, 1910, THE INDUSTRIAL PRESS, NEW YORK

MACHINERY'S REFERENCE SERIES

This treatise is one unit in a comprehensive Series of Reference books originated by MACHINERY, and including an indefinite number of compact units, each covering one subject thoroughly. The whole series comprises a complete working library of mechanical literature in which the Mechanical Engineer, the Master Mechanic, the Designer, the Machinist and Tool-maker will find the special information he wishes to secure, selected, carefully revised and condensed for him. The books are sold singly or in complete sets, as may be desired. The price of each book is 25 cents.

LIST OF REFERENCE BOOKS

No. 1. Worm Gearing.—Calculating Dimensions for Worm Gearing; Hobs for Worm Gears; Location of Pitch Circle; Self-Locking Worm Gearing, etc.

No. 2. Drafting-Room Practice.—Drafting-Room System; Tracing, Lettering and Mounting; Card Index Systems.

No. 3. Drill Jigs.—Elementary Principles of Drill Jigs; Drilling Jig Plates; Examples of Drill Jigs; Jig Bushings; Using Jigs to Best Advantage.

No. 4. Milling Fixtures.—Elementary Principles of Milling Fixtures; Collection of Examples of Milling Fixture Design, from practice.

No. 5. First Principles of Theoretical Mechanics.

No. 6. Punch and Die Work.—Principles of Punch and Die Work; Suggestions for the Making and Use of Dies; Examples of Die and Punch Design.

No. 7. Lathe and Planer Tools.—Cutting Tools for Planer and Lathe; Boring Tools; Shape of Standard Shop Tools; Forming Tools.

No. 8. Working Drawings and Drafting-Room Kinks.

No. 9. Designing and Cutting Cams.—Drafting of Cams; Cam Curves; Cam Design and Cam Cutting; Suggestions in Cam Making.

No. 10. Examples of Machine Shop Practice.—Cutting Bevel Gears with Rotary Cutters; Making a Worm-Gear; Spindle Construction.

No. 11. Bearings.—Design of Bearings; Causes of Hot Bearings; Alloys for Bearings; Friction and Lubrication; Friction of Roller Bearings.

No. 12. Mathematics of Machine Design.—Compiled with special reference to shafting and efficiency of hoisting machinery.

No. 13. Blanking Dies.—Making Blanking Dies; Blanking and Piercing Dies; Construction of Split Dies; Novel Ideas in Die Making.

No. 14. Details of Machine Tool Design.—Cone Pulleys and Belts; Strength of Countershafts; Tumbler Gear Design; Faults of Iron Castings.

No. 15. Spur Gearing.—Dimensions; Design; Strength; Durability.

No. 16. Machine Tool Drives.—Speeds and Feeds of Machine Tools; Geared or Single Pulley Drives; Drives for High Speed Cutting Tools.

No. 17. Strength of Cylinders—Formulas, Charts, and Diagrams.

No. 18. Shop Arithmetic for the Machinist.—Tapers; Change Gears; Cutting Speeds; Feeds; Indexing; Gearing for Cutting Spirals; Angles.

No. 19. Use of Formulas in Mechanics.—With numerous applications.

No. 20. Spiral Gearing.—Rules, Formulas, and Diagrams, etc.

No. 21. Measuring Tools.—History and Development of Standard Measurements; Special Calipers; Compasses; Micrometer Tools; Protractors, etc.

No. 22. Calculation of Elements of Machine Design.—Factor of Safety; Strength of Bolts; Riveted Joints; Keys and Keyways; Toggle-joints.

No. 23. Theory of Crane Design.—Jib Cranes; Calculation of Shaft, Gears, and Bearings; Force Required to Move Crane Trolleys; Pillar Cranes.

No. 24. Examples of Calculating Designs.—Charts in Designing; Punch and Riveter Frames; Shear Frames; Billet and Bar Passes; etc.

No. 25. Deep Hole Drilling.—Methods of Drilling; Construction of Drills.

No. 26. Modern Punch and Die Construction.—Construction and Use of Subpress Dies; Modern Blanking Die Construction; Drawing and Forming Dies.

No. 27. Locomotive Design, Part I.—Boilers, Cylinders, Pipes and Pistons.

No. 28. Locomotive Design, Part II.—Stephenson Valve Motion; Theory, Calculation and Design of Valve Motion; The Walschaerts Valve Motion.

No. 29. Locomotive Design, Part III.—Smokebox; Exhaust Pipe; Frames; Cross-heads; Guide Bars; Connecting-rods; Crank-pins; Axles; Driving-wheels.

No. 30. Locomotive Design, Part IV.—Springs, Trucks, Cab and Tender.

No. 31. Screw Thread Tools and Gages.

No. 32. Screw Thread Cutting.—Lathe Change Gears; Thread Tools; Kinks.

No. 33. Systems and Practice of the Drafting-Room.

No. 34. Care and Repair of Dynamos and Motors.

No. 35. Tables and Formulas for Shop and Drafting-Room.—The Use of Formulas; Solution of Triangles; Strength of Materials; Gearing; Screw Threads; Tap Drills; Drill Sizes; Tapers; Keys; Jig Bushings, etc.

No. 36. Iron and Steel.—Principles of Manufacture and Treatment.

No. 37. Bevel Gearing.—Rules and Formulas; Examples of Calculation; Tooth Outlines; Strength and Durability; Design; Methods of Cutting Teeth.

No. 38. Grinding and Grinding Machines.

(See inside back cover for additional titles)

MACHINERY'S REFERENCE SERIES

EACH NUMBER IS ONE UNIT IN A COMPLETE LIBRARY OF MACHINE DESIGN AND SHOP PRACTICE REVISED AND REPUBLISHED FROM MACHINERY

NUMBER 2

DRAFTING-ROOM PRACTICE

THIRD EDITION

CONTENTS

Drafting-Room System, by RALPH E. FLANDERS - 3
Tracing, Lettering and Mounting, by I. G. BAYLEY 17
Card Index Systems, by A. L. VALENTINE, J. S. WATTS and A. B. HOWK - - - - - 34

Copyright, 1910, The Industrial Press, Publishers of MACHINERY, 49-55 Lafayette Street, New York City

CHAPTER I

DRAFTING-ROOM SYSTEM*

The drafting-room may be said to bear a double relation to the shop. It is the place where designs are originated, and so in a sense it is the head of the shop, furnishing it with the ideas which the machinist turns into concrete forms in iron and steel. On the other hand, the drafting-room may be the servant of the rest of the establishment, doing its calculating and its routine work of testing, etc., lessening the tax on the memory, and leaving the minds of the workmen and foremen free to the task of getting out the product. In different shops, the use which is made of these two functions varies—one or the other of them may be neglected. It is safe to say, however, that there are scores of shops where the drafting-room is looked upon as an almost unnecessary evil, and every cent which is spent in its salaries and supplies begrudged, when this part of the plant might be the servant of the whole, making the work go more smoothly and easily all along the line, from office to shipping-room, if the men in charge understood how to get from it its full value. It is this second function which is, perhaps, least understood. In the following, attention will be called to some of the different ways in which the drafting-room may lighten the labors of the workmen, lessen the strain on the foreman, and grease the wheels of industry generally. We will neglect entirely the matter of design, therefore, and consider the routine office work of a typical shop. All the ideas which will follow have been put into practical and satisfactory use, some of them for years in the largest establishments in the country.

Systems will vary greatly in such widely varying lines as fire-arms, electrical apparatus and milling machines, but in order to take a case which will be most suggestive, suppose it is required to equip with all necessary drawings, lists and records, a small shop building a line of machine tools.

Numbering the Parts

We should have to start with a layout of the machine in hand, done to accurate scale, made either as a new design or a copy of a machine already being produced. The first question to consider is that of numbering the parts and arranging the detail drawings. A good way to number the parts, drawings, etc., is to give to each variety of tool produced a distinctive letter, such as "A" for universal, "B" for plain, and "C" for vertical milling machines, "D" for shaper, and so on. Attached to this is a number distinguishing the size. "B2" is No. 2 plain miller, "L24" might be 24-inch lathe, and so on. The men in the shop and office alike soon fall into the way of calling the machines

* MACHINERY, March, 1905.

by these nicknames. Then each separate part is given a serial number. Thus "L20-49" might mean the head cone gear for a 20-inch lathe. This designation would be marked on the pattern and serve as a pattern number as well.

The arrangement of the parts in order for numbering depends on whether the parts are to be manufactured and fitted in assembling, or fitted each to the other in the process of making. We may take it for granted that the shop is trying at least to do business in a profitable way, so the arrangement will be considered from a manufacturing standpoint. The parts should then be grouped in such manner that pieces having similar operations involved will be detailed on the same sheets. First will come the large castings, like the beds, legs, tables, heads, etc.; after, come the other small castings, involving milling and drilling mostly, as the brackets, levers, braces, gear guards,

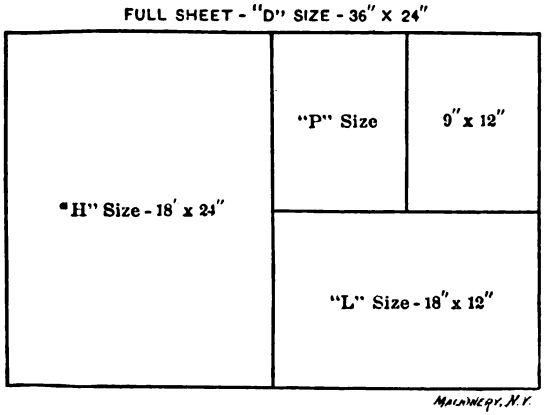

Fig. 1. Standard Size Drawing Sheets

etc.; then the castings which are finished mostly by turning, like pulleys, gears, and bronze bushings. Next comes the group which includes the turned parts made from stock or forgings, such as spindles, shafts, steel gears, etc.; followed by a group of the small parts made on the screw machine. The last class contains the parts made by milling and drilling from flat and rectangular stock. If the parts are numbered and arranged on the drawings in some such order as this, the workman who makes a specialty of certain operations will have all his work conveniently grouped together on the sheets.

Standard Drawing Sizes

To obtain the greatest simplicity in handling and indexing in the drawing office, it is necessary to have a single standard size for the sheets. In the shop, however, big blueprints are a nuisance, and the sheets should be no larger than is needed to show a convenient number of the parts in the group being detailed. It is possible to satisfy the requirements of both shop and office by making the tracings of a

standard size, and cutting the prints up afterward into as many smaller sheets as may be necessary. Fig. 1 shows how the convenient 36-inch by 24-inch "D" size sheet may be cut up into the other smaller sizes; thus it may make two "H" sheets, or four "L" sheets, or eight "P" sheets, or two "L" sheets and four "P" sheets, and so on. The smaller size is especially suitable for the parts made on the screw machine. If an extra large sheet is needed for an assembly, or a full-size view of a large casting, a 36-inch by 48-inch sheet, or larger, may be made, folded into the standard sheet dimensions, and filed with the rest.

Detailing

Starting in the order in which the parts have been grouped, detail them out on large sheets, sub-divided to suit the case in hand. Don't

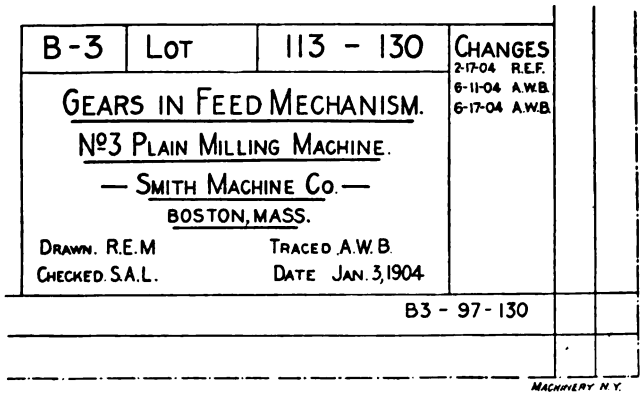

Fig. 2. Lower Right-hand Corner of Drawing

try to crowd them, but give plenty of room for changes and additions, and leave space in each drawing for adding other parts of a similar group, if this should be required in the future The lower right-hand corner of each section is ruled off into a title as shown in Fig. 2, containing on the top line the symbol of the machine, in this case B3, which means No. 3 plain miller, then the lot number, which is filled in on the print, and lastly, the list of part numbers included on that drawing. The second line contains in large letters a title descriptive of the contents of that drawing; the next names the machine, and after that comes the firm name and the space for initials and dates. The column at the right, headed "Changes," will be explained later on.

In assigning numbers to the parts, leave a few numbers out at the start to give to the assembled drawings when they are made. Begin by numbering the column, say, No. 15. Leave out two or three numbers, to give leeway, if it is desired to add any new details to that sheet later on, and then number the knee and saddle, for instance, if they come next, 19 and 20. The first sheet then would include Nos. 15 to 18, and so 15-18 would be printed in the proper space in the top line. The drawing with the knee and saddle, containing only these

two details might be numbered 19-23, and so on. In the same manner, if the first group ends at 60, begin the next group at 100; that might end at 271 and the next begin at 300, and so on. Thus parts and drawing will be numbered in a flexible way which will make additions easy without deranging the list of parts. In the margin at the lower right-hand corner of the sheets should be placed the numbers inclusive of all the details on all the drawings of that sheet, as shown in the sample title, Fig. 2. This is for convenience in filing the tracings.

Dimensioning

In detailing, the way in which the parts are dimensioned, the completeness of the information given by the dimensions and the notes,

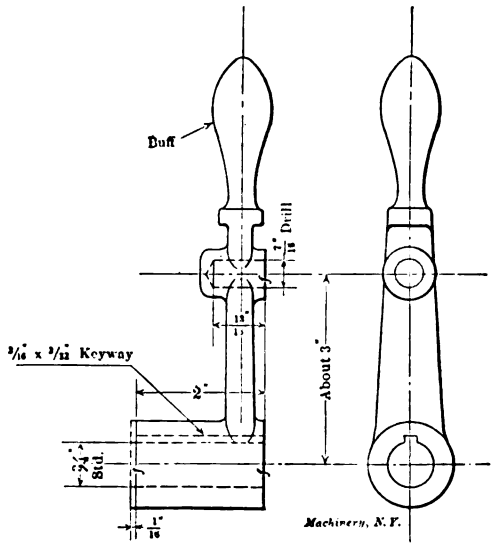

Fig. 3. Detail Drawing

and the clearness of the drawing itself, all these points together make the difference between help and hindrance. Much has been written in mechanical papers, and much more said in the shop, profanely and otherwise, about the dimensioning of drawings. The draftsman must keep in his mind's eye the whole course of the manufacture of the piece, and give the dimensions in such manner that the workman will not have to add or subtract or multiply or divide this and that to obtain the measurement he requires. Of course no scaling of drawings is allowed in the shop. The ideal to be kept in mind is that of a drawing having information so completely given that the wayfaring man, though a fool, need not ask questions, but take the blueprint, follow it in blind confidence, and turn out work all completed save for

the little squaring up of shoulders that may be needed in fitting it in place in the machine. In Figs. 3 and 4 are shown detail drawings, which more or less completely illustrate this idea.

Fig. 3 shows a cast-iron lever. The handle is not turned, but buffed, as noted. Since the body part has no finish given, it is painted to correspond with the rest of the machine. The ends of the hub and the face of the boss are marked "*f*," which means "finish." This idea is sometimes carried out more completely by making f^1, for instance, mean a ground surface, f^2, a filed surface, f^3, a smooth-turned, but it is much less confusing to write out in plain English whatever finish may be required other than that left by the cutting tool. Do not be afraid of putting on the drawing any notes which will aid the operative. "Finish" is often indicated by a red line about 1/16 inch outside of the finished surface and parallel with it. This is the best and clearest way on paper drawings, and blueprints as well, when the red lines print well, but it takes good paper and careful printing.

The dimension from the center line of the hub to that of the boss is marked "about 3 inches." This means that the centralizing of the holes in the casting is of more importance than the actual dimension given. The hole in the hub is marked ¾-inch "std.," or "standard," which means that it is to be reamed to fit a standard plug gage. The hole in the hub is marked "drill," which shows that it is not to be reamed or fitted, but left as the drill leaves it. It will be noticed that a "fit" of 1/16 inch is indicated at one end of the hub. The workman who squares up the casting at this point must leave 1/16 inch for the fitter to remove in putting the machine together. In the same way "fit" is indicated on the drawings of all shafts, etc., where it is necessary to square up a shoulder to make an end fit. This relieves the lathe hand of all speculation as to where his fits come. Under the detail are placed the part number, the name, the material of which it is to be made, and the number wanted for each machine.

There are no casting or pattern dimensions given in the detail. It is an unmitigated nuisance to have the shop drawings obscured by a maze of dimensions which are never used but once, when the pattern is made. These pattern figures may be placed on the paper drawing from which the tracing is taken, or they may be put in with a yellow pencil on a blueprint taken specially for that purpose. Of course, when it is necessary for a finished surface to bear a definite relation to a rough surface, dimension lines may be drawn from that point, but otherwise the shop should have to do only with the finished surfaces.

The detail drawings for the patternmaker should show the draft plainly wherever it is required, show the manner in which a finish cut terminates in the rough casting, and, in general, give a true picture of the piece as it will look when finished in cold metal. This relieves the patternmaker of all guesswork as to whether he ought to add or take off the draft, and, when combined with careful pattern-making, furnishes a record of the exact shape of the castings, which will be useful in estimating clearances in future changes.

Fig. 4 shows a sample detail of a steel pinion and shaft. Limits

are shown for all the diameters. The determination of limits calls for good judgment on the part of the draftsman. It is very natural for him to put the standard much too high, while the shop often complains of the closeness called for, not realizing that by the old cut-and-fit method much closer work was done than is needed or called for under the limit system. Limits may be expressed in two ways. For instance, a running fit on a shaft to go in a 1¼-inch standard hole in a bronze box may be marked 1¼

—0.001 max.
—0.0015 min.

or it may be expressed

0.249
0.2485

The first way may be best for shops where the workmen have not yet become acquainted with their micrometers, but it savors strongly of the "⅞ inch plus 1/32 inch less ½ of 1/64 inch" of our forefathers.

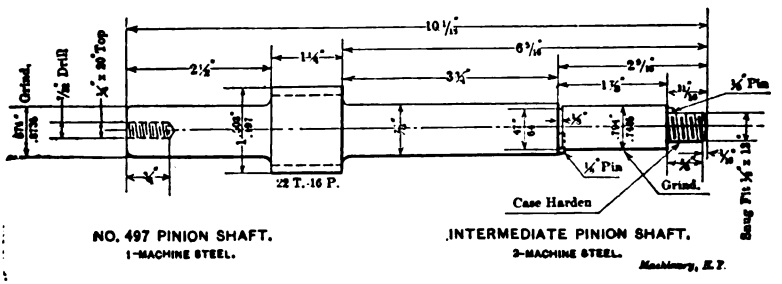

Fig. 4. Another Example of Detail Drawing

In the better shops of the country the very errand boys learn to use the micrometer with ease and skill, so it would seem that the second method of marking the size ought not to puzzle the workmen very long. In either case the larger dimensions should be on top, to catch the eye first. In places where there are no limits given, of course it is understood that good, accurate scale measurement will do.

On the drawing, the tap drill size and the depth of a tapped hole are shown. The two journals are marked "Grind," which means "grind to size"; the one into a plainly shown recess, the other, where the box does not come within ½ inch of the shoulder, up to the fillet. In general it is intended that the dimensions shall be so arranged that the lathe hand will be able to use them as they stand, without bothersome calculation. On work made from the round or rectangular bar, finish marks are omitted. If it is desired that the piece be left rough at any point, the words "stock size" may be applied to the figures describing that dimension. For instance, on a 1¼-inch cold-rolled shaft turned up for a short distance at each end, the central part would be dimensioned 1¼-inch "stock size." This particular piece is used twice in the construction of the machine, and in different localities, so it is given two names under the same part number.

Part Lists

Two lists are required: A list of detailed parts, and a list of stock parts. Every single item of a given machine must be recorded somewhere, either on the blueprints or in the list of screws, washers and other sundries taken from the stock-room or purchased outside. A page heading for the list of parts in the casting group is shown, upper sketch, Fig. 5. The first column gives the part number; then comes the name, then the number wanted, the material of which they are cast, and lastly, two columns marked "castings ordered" and "order filled." These spaces may be conveniently checked by the one who orders the castings, and he will thus have a good idea at any time of what progress is being made in supplying the needed material. This does not, of course, take the place of whatever foundry order system may now be in use. The page heading of the parts made from the bar and rod are also self-explanatory, the last two columns being filled in with the dimensions of the rough stock needed to make each piece. It will be remembered that numerous blank spaces were left

CASTING PARTS.

PART No.	NAME	No. WANTED	MAT'L	CASTINGS ORD'RD	ORDER FILLED
115	Vise Body	1	C. I.		
116	Vise Swivel Base	1	C. I.		
117					
118					
119	Table Stop Clamps	2	C. I.		
120	Table Stop Abutment	1	C. I.		

BAR STOCK PARTS.

PART No.	NAME	No. WANTED	MAT'L	SECTION	LENGTH OF BLANK
411					
412	Vertical Feed Shaft	1	M.S.	1⅛" Diam	13⅛"
413	Elevating Hand Wheel Shaft	1	C.R.S.	1⅛" Diam	11⅝"
414	Telescope Shaft	1	M.S.	1⅛" Diam	15½"
415	Telescope Quill	1	Steel Tubing	1⅝"×1⅛" Diam	12⅜"

Fig. 5. List of Detailed Parts

in numbering the parts, to give room for future changes. Similar gaps should be left in the list of parts.

The "List of Stock Parts," of which two sample headings are shown, Fig. 6, covers everything not otherwise provided for, and gives all the information necessary for ordering. Leave plenty of room here, as well, for additions and alterations. These lists may be done in ink on printed and ruled blanks of thin bond paper, or they may be typewritten for blueprinting in the following manner: Do the work in a good strong manifolding machine with a new black ribbon. A piece of carbon paper should be placed in back of the sheet with the face against it. This prints the back of the sheet as well as the front, and makes characters heavy enough to make good blueprints.

If these lists are printed, clipped together in tough paper covers, and distributed generally among those who have any use for them, they will save a vast amount of useless mental strain. Before a new lot of machines is ordered, the stock-keeper can go through the list and see

that he has got every screw and washer on hand that is needed. The man who orders the castings can look over the supply on hand and govern himself accordingly. The man who has charge of the bar stock can keep himself supplied with the necessary material, and cut it off of the proper cross-section to the proper length, as fast as it is needed. The foremen in the shop can assure themselves that nothing has been forgotten, that everything is coming along as it is wanted, and have in general a constant reminder at hand of what is required of them.

Assembly Views

After all this has been done, we may make the necessary assembly views, working entirely from our detail views and stock part list. If the parts all go together as required, it is an indication that the job will check up well. On these drawings, at least, and perhaps on the details, it is a good plan to use some simple method for distinguishing the various classes of materials by cross-sectioning. It is

LIST OF SQ HEAD SET SCREWS.

NAME OF SCREW.	No WANTED	DIAM.	LGTH	MAT'L	FINISH	POINT
To hold Dog # 89 on Shaft # 417	4	3/8" x 16"	1 3/4"	Steel	C.H.	Cup
" " Rod # 468 on Bracket # 111	1	3/8" x 16"	1 3/4"	Steel	C.H.	Cup
" " Gear # 126 on Shaft # 439	2	3/8" x 16"	1 3/4"	Steel	C.H.	Cup
" " Stud # 458 in Holder # 97	5	3/8" x 16"	1 3/4"	Iron	Soft	Oval
" " Roll # 512 on Pivot # 542	12	3/8" x 16"	1 3/4"	Iron	Soft	Oval

LIST OF FURNISHINGS.

DESCRIPTION	AMT PER MACH.
Single Belting - made Endless - First Qual. - 1½" Wide.	13 Ft. 7 In. Endless
Single Belting - First Quality - 1" Wide.	49 Ft.
Round Belt - ¼" Diam - Furnished with Couplings.	3 Wanted 11 Ft. each
"Cosmolubric" Oil.	2½ Galls

Fig. 6. List of Stock Parts MACHINERY N.Y.

good enough to have one style for steel and wrought iron, one for brass, bearing metals, etc., and one for cast and malleable iron.

Tracings

Next comes the tracing. If the machine is a new one, never built before, it is a good plan to shellac the paper drawings and send them out into the shop for the first lot. This will make the inevitable changes easier to handle than when blueprints are used from the start. As soon as the machine is well in hand, the drawings may be recalled, cleaned with alcohol, and traced. It is of great importance to use the very best grade of tracing cloth. Not every well-advertised brand will stand the rubbing and scrubbing for a draftsman who has the fever of improvement seething in his brain. It costs much less to get the best tracing cloth at the start than it does to have to make new tracings on account of having cloth that will not stand erasure.

Checking

The checking may now be done. It is best to delay this until after the tracings are completed, and then it is done once for all; and it

can best be done by some one other than the man who did the detailing. If, however, it be gone over in some orderly, systematic way, it may be as well done in a one-man drafting-room as in some large establishments, where the drawings are examined and initialed by every one in sight, from the engineer in charge down to the tracer.

Think over beforehand every direction in which a mistake is liable to occur, and make a table covering these chances of errors and tack it in plain sight on the wall over the desk. For such a system as that we are considering, the following list might be appropriate:

1. General design.
2. Finish.
3. Dimensions; sufficiency and arrangement.
4. Dimensions; compared for accuracy.
5. Compare with list of parts.
6. Compare with list of stock parts.
7. Pattern number.
8. Notes.
9. General title.

That is to say, beginning with the first part in the list of detailed parts, we would examine it first for points in its general design. 1. Is it well proportioned, strong enough, and in general harmony with the lines of the rest of the machine? Could it be changed so as to require less machining, or to make it cheaper to mold (if a casting)? 2. Is there any unnecessary finish, and has the needed finish been properly indicated? 3. See that the dimensions are sufficiently full, and arranged in such manner that the workman will know, without figuring, the dimensions he needs. 4. Compare the dimensions of the detail in hand with those of every single contiguous and related piece in the whole machine, whether detailed or given in the list of stock parts. This is the important item in the list, and if it is faithfully carried out, it will double-check every dimension, as each part is thus checked up once individually, and again in the checking of other related parts. 5. Compare titles and stock dimensions with entries in the list of detailed parts. 6. See that every stock part which is related to the detail being considered is properly entered on its list. 7. If the detail is a casting which has no pattern of its own, but uses that of some other part of the same or another machine, see that the proper pattern number is given under the title. 8. Be sure that notes are given, to supply the workman with all the information he needs as to fit, finish, etc. Otherwise he will worry the foreman with fool questions. 9. After the details have been checked, as above, see to it that the title of the drawing is correct as to part numbers, names, etc.

In the same manner the lists must be gone over, checking every name, number, note and dimension.

Printing, Mounting, Etc.

The tracings may now be blueprinted, cut up into the proper sections, and mounted on suitable boards. Do not send them out rolled up, to get defaced and torn, and refuse to lie flat in the files, when

they are returned. When mounted, they are distributed to whoever needs them. With the details intelligently grouped as described above, and with not too many on a drawing, one set of detail prints ought to suffice to put through a single lot in the shop. Be generous with the lists, however, and put them wherever they can be of any service. Stamp each print, in red, with the date when it was printed, and keep a record of prints made and delivered to the shop. This record will be found very valuable when making changes as described below.

Changes

In a shop which is alive, the product is in constant process of improvement, so it is necessary to make a full provision for this state of affairs in a good drafting-room system. In the first place, the men in the shop should on no condition be allowed to make an erasure or addition of any kind to the shop prints and drawings. If an error is discovered or an improvement found advisable, let it be reported at once to the draftsman, who should stand ready to make any needed change with promptness and good grace. In general practice, however, it will be found best, from the drafting-room standpoint and that of cheapness of production as well, to delay radical changes until a new lot is begun. In some places the foremen and other prominent men are furnished with stub books in which they write suggestions for the improvement of the different lines of machinery. The leaf is filled out in duplicate with the stub, and sent to the drafting-room, where it is considered either immediately or when a new lot is ordered, according to the urgency of the case. This scheme gives the draftsman the advantage of having all the suggestions in a tangible form, for ready reference, and also gives the credit to the men who hold the duplicate stubs.

In the same manner as was done when checking, it will be found advisable to make out a list of everything which might require attention in making alterations of any kind. The following table would cover about everything. This ought also to be printed and nailed on the wall in plain sight of the draftsman:

1. Detail tracings.
2. Assembly tracings.
3. List tracings.
4. All prints (detail, assembly and lists).
5. Patterns.
6. Special tools.
7. Record of changes.

In making a change, if it is at all elaborate, it is safest to sketch it out on detail paper before making changes on the tracing. In erasing tracings, use any smooth sand eraser which has been approved by experience, and place under the part being treated a sheet of some smooth hard substance like celluloid, sheet metal, or a round-edged piece of glass. This will remove the ink without giving the rubber a chance to deeply abrade the cloth itself. Cases sometimes occur in which a comparatively simple change, like shortening the over-all

length of a complicated casting, would entail a considerable amount of labor. To avoid this, the dimensions only may be changed, and then a small heavy circle drawn around each dimension. If on a paper drawing, draw the circle with red ink; if on a tracing, use black ink. This gives notice to whomsoever it may concern that the dimensions are out of scale, so that the drawing will not measure correctly. Where the change is one of 1/32 inch or less, it is not advisable to alter the lines of the detail or circle the figures.

The assembled drawings should be kept up to date if they are to serve any purpose at all. In some cases it might be permissible to introduce circled dimensions on these tracings as well, where an otherwise small change would require much erasing. The lists also must be corrected, of course.

There are two ways of changing the blueprints, where the change is so small as to make a new print inadvisable. One way is to use the "soda solution" which acts chemically on the paper itself. This gives the most permanent results, but requires some skill in handling, as the lines do not appear until some time after the liquid has been applied. Chinese white, ground in water, can be used like ink, and easily removed when desired—so easily, in fact, that it is best to shellac the changed portion of the print to preserve the lines. With either method it is best to draw in the new lines first, and then obliterate the old ones with a blue pencil, this being the only known method of erasing on a blueprint. Be sure that every print of each tracing is changed—the list of prints charged should take care of this. If new copies of a print are required on a change, destroy the old ones; do not leave them lying around, to cause trouble.

Patterns and special tools must be looked up for each individual case, and duplicate written orders made out for changes, one to go to the toolmaker or patternmaker, and the other to be kept in the office as a record until the work is reported finished.

Referring again to Fig. 2, there is shown at the right of the title a column headed "Changes." After each change is completed and checked up, the person making the change should enter here his initials and the date, in small legible characters. A "Record of Changes" book should be kept. Under the date signed in the "Changes" column there should be entered a brief description of the alterations, giving exact dimensions, and perhaps the reason for them as well. A separate book should be kept for each line of machines manufactured. By comparing the last change date on a print with that on a tracing, it can immediately be determined whether or not the print is up to date. By referring to the given date in the "Record of Changes," the exact scope of the alteration can be found at any time. This will be found a great convenience.

In cases where an error has been made in the shop on a machine, and a deviation from the drawings in that particular case will save a large amount of costly labor and material, such change may be made; but it must be recorded, for convenience in making future repairs and attachments. It is the proper thing to number the machines of a

given kind and size serially, beginning, for instance, by numbering the first 20-inch lathe built, No. 1, the next one No. 2, and the one hundred and seventy-eighth one No. 178, and so on, as long as the machines are built. This number should be stamped in a prominent place, and attention called to it in the catalogues and other printed matter of the firm. A book for a "Record of Machines Shipped" should be kept, with a page for each individual machine. This page is numbered with the tool's serial number, and contains name of person or firm to whom the machine was sold, a record of the inspector's tests, a description of any change from the standard drawings used on other machines in the same lot, and a record of all attachments furnished, repair parts sent, complaints from user, etc. It is easy to see the value of such a record as this in furnishing new parts, remedying defects, and estimating the values of various designs.

After each lot of machines has been approved ready to ship, all the prints—detail, assembly, and lists—should be returned to the office. A complete set should be taken from them and the duplicates destroyed. File this set of blueprints away in a folio the size of the "H" sheet, doubling the "D" size to do this. As far as the work done in the home shop is concerned, this, with the office book, will furnish a record of each individual machine for all time, no matter whether it goes to Klondyke, or stays in the town where it was made. These folios should be kept indefinitely.

Drawings for Jigs and Fixtures

It is not feasible to try to make the tool drawings of jigs, special cutters, etc., on full-size sheet, even though divided, as the standard parts are. These should be made on a suitable standard size of a good grade of detail paper in a quick, sketchy way, shellaced, and sent into the shop. Number these drawings with the symbol and part number of the detail for whose manufacture they are used, adding a serial number as well. This serial numbering is common to all tools made, no matter for what purpose, and is to be given them in the order the drawings come from the office. Thus if L 22-75 is the part number for the spindle of the No. 4 vertical miller, the finishing taper reamer for the hole in the same might be numbered L 22-75-193. If A 4-267 is the index worm-wheel for the No. 4 universal miller, and the next tool drawing made is a hob for same, it would be numbered A 4-267-194. These numbers should be stamped or etched on the different tools as soon as they are made.

A book should be ruled up for a "List of Tools." A sample page heading is shown for this in Fig. 7. The tools are entered serially as fast as drawn. The first column gives the date when drawn, the main part of the page, the description. Next is a space for a list of parts for which this tool is used other than the one it was made for. As changes are made, old numbers are crossed off from here and new ones added, so plenty of space must be allowed. For convenience in finding the drawing, the last column gives the standard size of sheet on which the tool was drawn. It will be noted that one tool is marked "None."

This tool was made in the shop off-hand, without any drawing to go by, but it was entered on the list, and its tool number marked on it, to give it a local habitation and a name. These tools and jig sheets should be filed in a drawer of their own, divided into compartments of suitable size, and all arranged with serial numbers in order, the lowest at the bottom. The jigs and tools themselves are best arranged with the serial numbers in order, since they will avoid constant rearranging as the stock increases. To find them readily, an index list should be prepared, giving the standard machine parts in numerical order, and listing under each one all the special tools used in its production, whether those tools were originally used for it or not. Of course much of this system of keeping track of special tools is required only in shops where they are used in large numbers, but that may be taken for granted, if the concern is in earnest about doing a profitable business on a large scale.

Special Machines and Attachments

In cases of special machines or outside work of any kind, which does not come under the head of standard product, the same system may

DATE.	TOOL NO	NAME	USED ALSO FOR.	SHEET.
2-17-04	H14-76-276	.498" Rose Reamer for bushing holes in Stop Slide	(H7-96) (K1-72) (L14-472)	None
2-17-04	B2-28-277	Jig for bushing holes in Gear Box		D
2-18-04	B2-28-278	Boring Bar for bushing holes in Gear Box	(G2-49) (H6-82) (L17-24)	L
2-20-04	L17-480-279	Gang Rack Cutter for Feed Rack	(L20-480) (L24-480)	P

MACHINERY N.Y.

Fig. 7. List of Tools

be followed as a whole, with the exception of the symbol for the machine, which should be given a serial number instead of the letter and size number of the regular product. A record of these serial numbers should be kept in the office, and the drawings filed away, if the job is important, in the same manner as the standard blueprints. Attachments to regular machines, made up separately, may follow the entire system for standard parts. The symbol describing them may be formed by adding a letter to the symbol letter of the machine. Thus AA-3 would be "Vertical Milling Attachment for No. 3 Universal Miller"; BD-4 would be "Rack Cutting Attachment for No. 4 Plain Miller," etc.

In place of the record books suggested, it might be better to use loose leaves, with punched holes, held in suitable binders. These leaves could then have proper entries made on them on the typewriter,

and thus save hand work. It will be noted that in no case are there any forms used in such numbers as to require the use of printed matter, so the initial expense is small. Printed forms, index systems, etc., may be evolved as the shop grows.

Summary of Advantages of System Outlined

In recapitulation, a drawing office managed in some such way as this will give the firm the benefit of the following advantages:

Complete tracings and blueprints, easily filed and indexed, and made in such a way as to give the fullest, clearest information possible to the workman.

Complete list of parts as a convenience in tracing the progress of the work and keeping up the supply of raw material.

Complete list of all stock parts, for the benefit of the assembling foreman and the stock-keeper.

A list of all tools used for any given part, and ready means for finding the same, also means for ordering duplicate tools by number from the original drawings.

Means for making all changes entailed by changes in the product in a simple, comprehensive way, and for making a permanent record of same.

A record of the suggestions made in the shop and office, for the drafting-room in making changes, and for the firm in determining the relative value of their employes.

A full individual history, by means of the office record and the filed prints, of each machine built, useful in many obvious ways.

There are many men to whom the suggestions given above will seem the veritable A B C of the business; on the other hand, there are dozens of places where the suggestion of doing things in some such way as this would be considered a dangerous and revolutionary proposition. But practically all the work covered by a good system has to be done by someone, some time, and if it is not done decently and in order, it will be done in vexation of spirit, and with waste of time and money.

CHAPTER II

TRACING, LETTERING AND MOUNTING *

While the previous chapter has dealt with the system of the drafting-room in its relation to the shop, and outlined its functions in a general, although comprehensive, manner, the present chapter is intended to deal with the small details of performing the work in the drafting-room, at the same time as many valuable hints are included with special reference to the young draftsman. In fact, the present chapter has, in particular, been addressed to the beginner, although it has general application.

At the commencement of a drawing-office career only a few tools may be purchased, adding others as they are needed. Careful selection is necessary, and good instruments pay for themselves in the end. A set of drawing instruments comprising a straight pen or two—one for black and one for red ink—a spring-bow pen, bow pencil, and dividers, a six-inch compass with fixed needle-points and interchangeable pen, pencil, and lengthening bar, will suffice. T-square, triangles, pencils, rubbers, erasers, and pens are usually provided by the office. Each man should keep his own instruments, and have a private mark on his triangles, scales and T-square for identification in case they become exchanged.

Small instruments should be put away each night, as in cleaning up the office they are easily lost. A drawer or cupboard with trays or boxes for the various tools is very necessary for the draftsman. A large clean rag duster or brush to wipe the board and T-square occasionally should be provided, as the least particle of dust getting into the pen will clog the ink, causing a poor line to be drawn. In case the eraser must be used (a thing to avoid as much as possible) rub a little French chalk or soapstone well into the part erased. A little of this prepared chalk should always be kept on hand; it can be procured from any artists' material store. A piece of rag, cheesecloth or chamois skin hung by a thumb-tack at the end of the drawing board comes in handy for wiping the pens. A sand-paper pencil sharpener and an oil stone completes the list.

Inks

Too much cannot be said about the inks used, as I believe to a certain extent a great many bad tracings can be laid to the bad quality of ink used in the various drawing offices visited by the author, in this country and abroad.

Good ink is indispensable, and no one should attempt to make a tracing until he has it. Some offices, to save (?) expense, resort to many ingenious ways of making ink by wholesale. A large bottle

* MACHINERY, September, October, November, 1906.

with a ground-glass stopper is provided. A quantity of broken ink (which can be purchased by the pound and much cheaper than buying by the stick or cake) is put into the bottle; a quart or so of ammonia is then poured over the ink. The bottle is then put in a warm place, shaken every now and then until the ink is dissolved, or partly so (the latter usually being the case) when it is supposed to be ready for use. This is the cheapest and worst way of making ink. Some drawing offices buy the ink ready mixed, put up in pint or quart bottles. For shop tracings, either of these methods may be resorted to. But for *neat* work it is almost impossible to get along with either; the only way is to mix the ink fresh each morning, washing out the pallet every day. When purchasing the ink stick, the very best should be bought; it can be recognized by a pleasant odor which cannot be mistaken and is perceptible when grinding it in the saucer. The saucer, or pallet, should be spotlessly clean, and the water clear. Do not use too much water at first; more can be added as the ink is mixed. A little vinegar in the ink will keep away the flies. In many offices in warm climates they are a great nuisance; the writer has seen whole views completely eaten away by these pests in a very short time. Commence by rubbing a little Prussian blue in the saucer; this is not absolutely necessary, but it improves the ink somewhat and helps to thicken it quicker. Saucers made of slate with ground-glass covers are the best. The ink stick should be held firmly, but do not bear too hard upon it while grinding, or else, when mixed, the ink will be gritty. Grind until the bottom of the saucer cannot be seen when blowing down into the ink; this is a good test, and one can also see if the ink looks gritty. Try it on the edge of the tracing cloth or paper to see if it gives a clear black line. The cover should always be kept over the ink to keep it from evaporating and free from dust. In cold weather, if the ink should thicken, hold it before the fire or heater, when it will run easily and will not clog the pen.

Ordinary scarlet ink is used by some draftsmen for making red lines, although it is much better to use a mixed ink of crimson lake color, adding a little ox-gall to make it run. The prepared ox-gall in tiny jars can be procured from artists' material stores. In the absence of this, a little soap rubbed into the color will answer the purpose. Bichromate of potash dissolved in the water before mixing the ink will help to keep away flies.

It sometimes happens that draftsmen are troubled with sweaty hands which mark the tracing as the work proceeds. This can be avoided by putting half a teaspoonful of ammonia in the water used for washing the hands.

Truing up the Instruments

As the pens are constantly used they will become blunt, which can be seen by holding them against the light and looking down upon the nibs. Every draftsman should be able to set his own instruments. There should be an oil stone in every office for this purpose. Let it lie flat on the window sill or a table near to the light. Screw up the

nibs tight, and, holding the pen in an upright position between the finger and thumb, move it backward and forward, as shown in Fig. 8, along the stone as indicated by the arrows, tilting it from side to side as shown by the dotted lines.

In this way a round and even surface is given to the nibs. They will be of the same length and true with each other. Now, holding the pen in a slanting position of about 30 degrees, rub the nibs upon the stone in a circular direction, as indicated in Fig. 9, rolling the pen as it were between the thumb and finger, turning it over and grinding both nibs alike. Hold the pen to the light occasionally to see if the nibs are level, and look down upon the points to see if the flat sur-

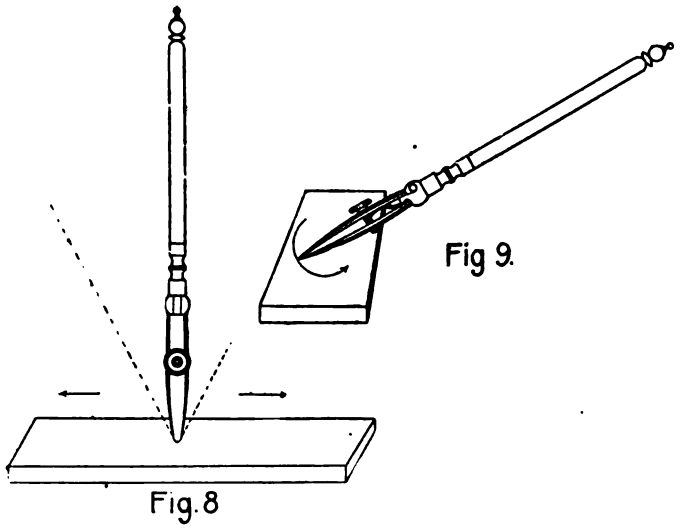

Figs. 8 and 9. Truing the Point of the Pen

faces have been taken out. If sharpened correctly, one will not be able to see anything, the same as when looking down upon the edge of a razor.

The thumbscrew must now be taken out and the inside edge of the pen be rubbed across the oil stone several times. Thoroughly clean the pen from any grit or oil and try it upon the edge of the tracing. If too sharp, it will have a tendency to run away from the T-square or straight-edge, in which case it should be rubbed on the stone again, as in Fig. 8, though with care, as all pens should be fairly sharp. The bow pen is trued up in the same way, with the exception that a thin slip of stone is passed between the nibs to take off any rough parts, as the nibs of the bow pen do not hinge; and when straight pens are made in the same way, they should also be treated in the same manner. All instruments should have the best of care. When not in use for some time they should be kept clean and free from rust by wiping them on a piece of chamois leather greased with vaseline.

Tracing Paper

Tracing paper is much used in architects' offices and occasionally by engineers for pencil sketching. When it is used for permanent work, the best quality should be had. But although it is possible to purchase paper capable of standing fairly rough usage, it is by no means as good as cloth.

A narrow strip of tracing cloth tacked along the lower edge protects the paper from being torn while leaning over the board. Either thumb-tacks, copper tacks, or small carpet tacks may be used to hold down the paper; a small magnetized hammer can be used for the latter, picking the tacks up very quickly, so that whichever plan is adopted, it takes about the same time. In case the tracing will be worked on for some time, or if there is any coloring to be done, the paper must be mounted on the board as described later.

Tracing Cloth

For permanent work tracing cloth should by all means be used. Cloth is either glazed or unglazed, the foreign make being by far the best. With proper care a tracing may be taken up when complete, as clean as when cut from the roll. All shop or working tracings should be made on the unglazed or dull side of the cloth, as this side will take pencil lines nicely, and when erasing has to be done it will not mar the surface so perceptibly. But for show or estimate tracings, where much finer and neater work is required, the glazed side must be used. The lines will be sharper, and the work will stand out much better. In either case the cloth should be laid down in the same manner as the paper. It should then be rubbed down with pulverized chalk.

Laying Down the Tracing

The drawing to be traced is squared up with the board and wiped down with a dry cloth or duster. The roll of tracing cloth is run down the board and cut off to correct size. The edges at either side are then torn off quickly and the cloth is laid down correct side up. A tack is put in the center of the top edge; the flat of the hand is drawn firmly but gently down to an opposite point at the lower edge, the fingers spread apart, while another tack driven between them holds that edge. Run the flat of the hand gently to the one side, driving in a tack; then to the opposite, stretching it well and securing it by another tack. The four corners and all intermediate spaces are then held down in the same manner.

With a dry rag or piece of chamois skin rub some pulverized chalk (or chalk scraped from the stick) all over the tracing cloth, dusting it off with a dry rag or brush. This will cause the pen to bite much better, especially in the case of show tracings where the glazed side is used. Some draftsmen use a little ox-gall in their ink for this purpose, but unless the exact quantity is used, the ink will be very sensitive.

Tracing

Everything is now ready for tracing. Try to understand the work as you proceed. If the job is likely to last long, work on one view

and complete it, as sometimes the temperature of a room will change over night, causing the cloth to become quite flabby, and although it may be stretched again by holding it near the radiator or in the sun, yet it very seldom goes back to its correct position. But when making a smaller tracing which can be completed in a day, put in all the black lines first, the red or blue lines next (when making show tracings), the printing or lettering next, and finally the border and cutting-off lines. Although as a rule red and blue lines are put in last, there are a few exceptions, as, for instance, when tracing a number of bolt or rivet heads in bridge or girder work; if a red line is run

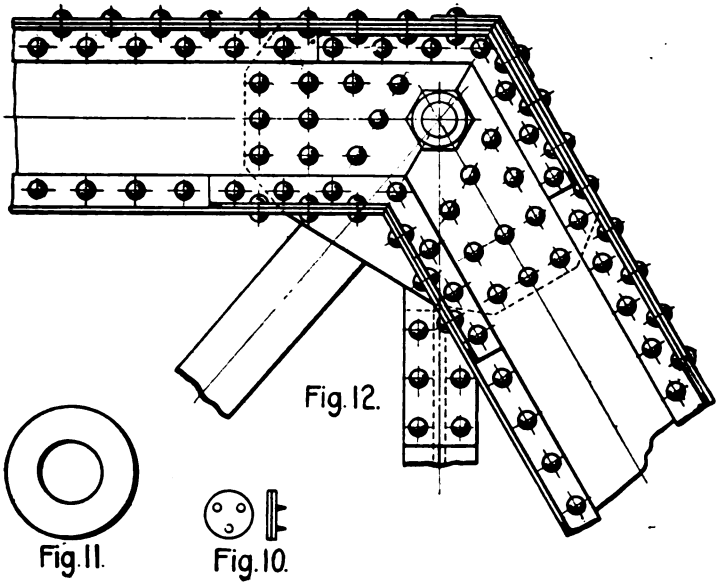

Figs. 10, 11 and 12. Horn Center, and Examples of Shading

right through the heads, it will be easier to get them all exactly true and in line; otherwise they are apt to be put in a very zig-zag way.

If the drawing is crowded, the best plan is to stick to the rule and put red lines in last, as otherwise they will make the drawing hard to read by covering up work not yet traced. As a general rule, commence with the circles and curves first, joining the straight lines onto the curves, and not *vice versa*. When a number of circles and curves are struck from the same center, always commence with the smallest or inner one first, while the center is good.

Sometimes a horn center, shown in Fig. 10, is used to protect centers from which a number of curves or circles are struck, as in gear wheels, for instance. These horn centers are circular pieces of horn with three needle points. Some draftsmen glue a small piece of hard wood or horn over the centers. The pens should be tried upon the edge of the tracing to see what thickness of line they make, and when once set

they should not be moved; for this reason some pens have small lock nuts on the thumbscrews. They should be wiped and the ink put in without again adjusting the screw. This particularly applies when making heavy lines. In this way all lines will be of the proper thickness. The pens can be filled with an ordinary writing pen or dipped in the ink sideways.

Working Tracings

Working tracings or shop tracings are usually made a little heavier than others. The lines should be all of the same thickness. No red or blue lines need be used, but all black, and although the tracings should be neat, especial care being given to the figures and dimension lines, yet such care need not be taken as when making a show or estimate tracing. The figures should be plain and simple and might be made a little large. The arrow points should be true and go exactly to their intended position. The figures should be checked before handing in the tracing so that as few mistakes as possible will come back to the tracer.

Show Tracings

Estimate or show tracings should have a little more time expended upon them. The lines need not be so heavy and as a general rule are shaded, *i. e.*, the lines furthest from the light, which is supposed to come from the top left-hand corner, should be heavier than the others; this is clearly shown in Fig. 12. Shade lines can be made by going over the lines again or adjusting the screw of the pen, causing the ink to make a heavier line. When dark-lining a circle the radius is kept, but the center changed slightly, as shown in Fig. 11; or the same center and radius may be kept, going over the dark or shaded side several times with the pen.

The letters, figures and dimension lines should be made neatly, the arrow points evenly made. Some draftsmen put in the arrow heads with their spring bow pen, and since they can be put in just as quickly this way and look much neater it would be well to practice this method. Dotted lines should be finer than full ones. The dots and spaces should be made the same length—about one-thirty-second to one-sixteenth inch in length. In shading rivet heads sometimes a small half circle is made inside the first, as shown in Fig. 12. It should be heavier than the outline of the rivet head.

The heading or title should be neat and attractive and a fancy border line might be made. All notes or stray words should have a neat red line drawn under them. Bolt heads should be neatly made and all small work carefully executed. Threads of bolts should be parallel and equally spaced, and may be accurately drawn or indicated, as shown in Fig. 13, *c*, *d* and *e*. Dotted work can be shown to advantage if the dots forming the apex and root of the threads are united, as shown at *e*. These may seem trifles, but they all tend to make a neat tracing.

Holding the Instruments

The author has been more than surprised at the rough and unsteady way which some draftsmen have of holding their instruments. The

bow pen should be held lightly at the top between the thumb and first two fingers, resting the little finger upon the tracings to steady the instrument while finding the position for the point. This being found, the little finger should be lifted and the bow pen cleverly spun between the thumb and first finger. It is good practice when at leisure to see how quickly one can make a number of small circles; in this way one will get into the knack of cleverly spinning the bow pen as described, instead of holding it in an awkward manner. The straight pen should be held in a slightly inclined position, the thumb-screw on the side away from the T-square or straight-edge, and with the second finger resting upon the screw to adjust if necessary.

Sectioning

Sections are shown in several ways. For working tracings line sectioning is by far the better. Plates and sections in wrought iron or

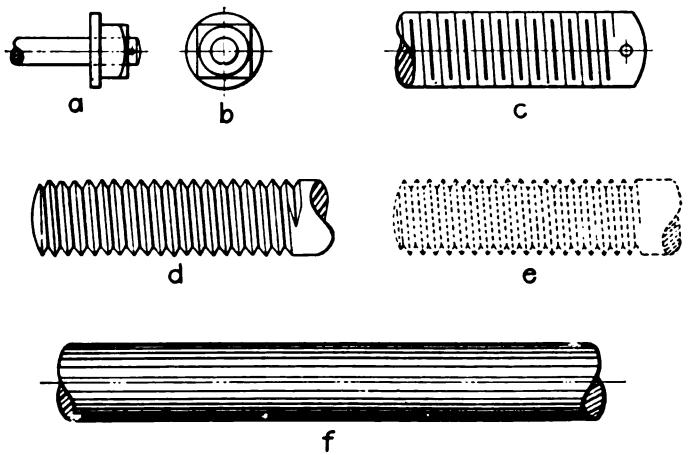

Fig. 13. Screw Threads and Shading

steel work may be blackened, as shown in Fig. 23. A narrow white space should be left between two pieces, as shown in Fig. 21.

A pretty way of showing sections, especially in the case of show tracings, is to represent the various metals, wood, etc., by broken and full lines, as shown in Fig. 14. These conventions are in common use, but in case there should be any doubt as to whether they will be generally understood it would be well to make a small note to one side, naming the material.

A neat little tool for section lining is easily made from a slip of wood a little thicker than the triangle or set square used by the draftsman, as illustrated in Fig. 15. The notch cut in one side is a little longer than the side of the triangle. Resting the thumb upon the T-square, the first finger upon the sectioner and the second finger (all of the left hand) upon the triangle, they are alternately slipped along each time a line is drawn with the pen. With a little practice, sectioning can be done quicker than by using a triangle and T-square

only, trusting to the eye for correct spacing. Section lining done this way looks very neat and even. Another section liner, shown in Fig. 16, can be made to fit triangles having a recess in the center.

Views in section are sometimes colored, generally on the back, turning the tracing over and tacking it down again; or, where there is much coloring to be done, the tracing should be mounted as described under that head at the end of this chapter; otherwise the color will

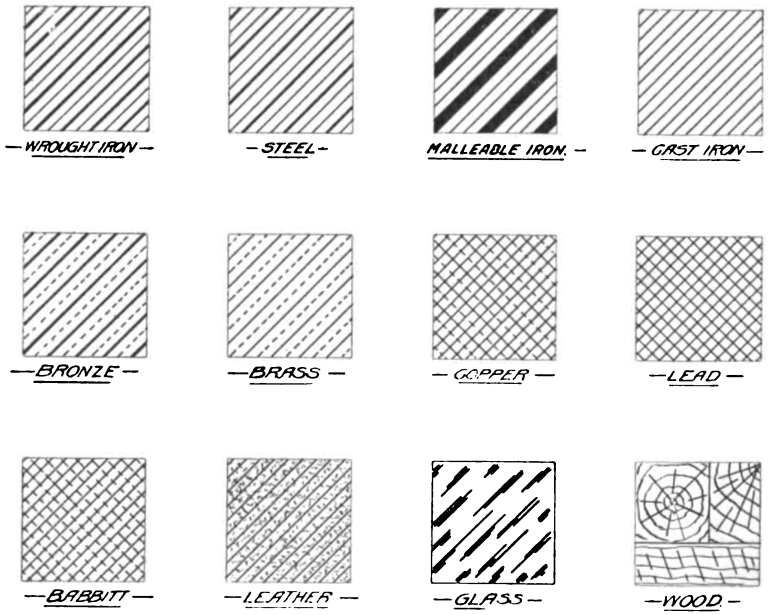

Fig. 14. Cross-sectioning *

cause the tracing to buckle, giving it a very untidy appearance. Having stretched the tracing, one may be mixing the colors while it thoroughly dries. The colors should be rather thin, and to make them run evenly a little prepared ox-gall should be mixed in well with them. This should not be omitted, as otherwise the colors will present a very smudgy appearance. Some draftsmen use a small piece of soap in place of the ox-gall.

By trying the colors upon a scrap piece of tracing cloth or paper and turning it over, the proper shade may be obtained.

---

* There is no universally adopted standard for cross-sectioning for the purpose of indicating different materials. The chart above does not agree fully with the charts given in any of a number of text-books on mechanical drawing, but as these at the same time do not agree with one another it has been assumed that the chart above represents as good practice as those in the text-books. A chart, similar to this, but differing in a few instances, and more extensive, was given in MACHINERY's Data Sheet No. 15, December, 1902. There being no recognized standard, however, cross-sectioning alone should never be depended upon for indicating materials to be used. Written directions should also be given, or a small chart placed in a corner of the drawing, indicating the conventions used in designating the various materials.

Following is a list of representative colors used in many offices:

Cast iron.....Payne's gray.
Wrought iron.....Prussian blue.
Steel .....Crimson lake and small quantity of blue.
Brass .....Yellow.
Copper .....Crimson lake and yellow.
Brick .....Crimson lake.
Wood .....Burnt sienna.
Earth .....Daubs of ink, Payne's gray, etc.

In the absence of Payne's gray, a pale wash of India ink in which has been mixed a little Prussian blue may be substituted. Very neat

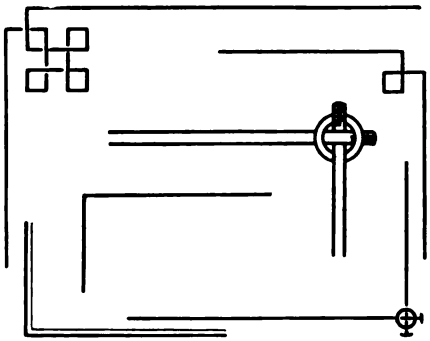

Fig. 18.

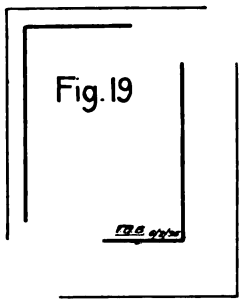

Fig. 20.

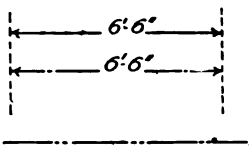

Fig. 17.

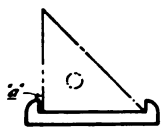

Fig. 15

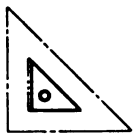

Fig. 16

Figs. 15 to 20

sectioning can be made with crayons, toning them down with a soft rubber.

Dimensions and Center Lines

Working tracings should have the dimension lines, center lines and all lines black ink, the idea being to make a neat, distinct tracing for use only, whereas a show or estimate tracing should be made with greater care. It is a well-known fact that many contracts have been awarded on the merits of a well-executed piece of work by the draftsman. The time and expense spent upon making a neat show tracing is never lost. Make the center lines of red ink or color, a fine long dash and dot line; make dimension lines either one continuous line broken only where the figures come, or a dash and dot line, as in Fig. 17.

Border and Cutting-off Lines

Simple as these may seem, yet many well-executed tracings have been spoiled by either neglecting a border line or making a very poor one. A one-line border is perhaps the best and its thickness should match the work in hand, together with the size of the sheet. There should be plenty of margin between the border line and the work. A fancy border line, of which a few samples are given in Fig. 18, may be put around estimate or show tracings. The cutting-off line should not be too near the border line, say, from ¾ inch to 1 inch. Nothing looks worse than to see a good tracing spoiled by cut-

Fig. 21.

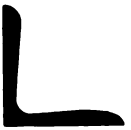

Fig. 22

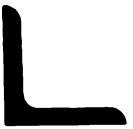

Fig. 23.

Fig. 24

Fig. 25

Figs. 21 to 25

ting off within a quarter of an inch of the border line (compare Figs. 19 and 20). The initials of the draftsman and date tracing was made should not be omitted.

Miscellaneous Directions

Attention to details is perhaps the true secret of making a neat tracing. No matter how trifling a detail may seem, it should be made as neatly as the rest of the work. Channels, angles, etc., in section, should be made accurately, as in Fig. 23. Do not make them, as is so often done, like Fig. 22.

When tracing a blueprint, the tracing should be tacked down with few tacks, as it will have to be lifted quite often to see the work distinctly; in fact, in many cases, it would pay to make a drawing from the blueprint and trace it. Drawings which are faint or unfinished should by all means be made clear before attempting to trace them, thereby sav-

ing much patience, but in particular the eyesight. In tracing from another tracing, a clean sheet of white drawing paper underneath will make it stand out clearly. If the draftsman understands what he is tracing, the work will be much easier and he will not be likely to make so many mistakes as he would if tracing a number of meaningless lines.

The tracing should be wiped down occasionally with a clean, dry duster or cloth. Cotton sleeves are sometimes used to protect the coat. A sponge-rubber or piece of bread may be used to clean a tracing, but if proper care has been taken, a tracing can be taken up as clean and neat as when tacked down. A greased, soiled tracing shows

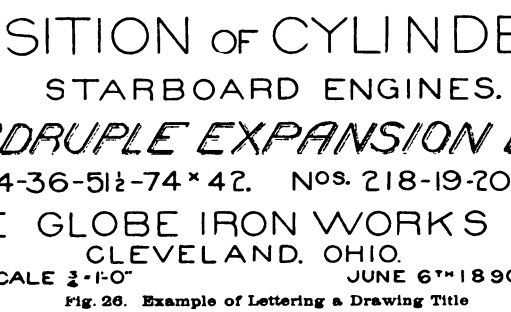

Fig. 26. Example of Lettering a Drawing Title

a bad workman. In some offices it is the practice to sponge the tracings down with benzine. Waterproof ink must be used by all means if this plan is adopted. When the tracing is complete, the draftsman should look over it carefully, trying to detect any errors, as all such count against him. The shop hands, as a rule, are only too pleased to point out any trifling mistake coming from the drawing office. Accuracy, as well as neatness and quickness, is desirable.

Lettering

No matter how neatly or carefully the working lines of a tracing are made, if the lettering and figures are not satisfactory the tracing will look poor in every sense of the word. The young draftsman should, therefore, take especial care to get into a neat way of lettering, and should devote a little of his spare time each day to this end if he wishes to excel as a neat draftsman. Neat letterers are in demand and are always sure of a position. Many cases are known, for instance, where a good letterer has been employed in his spare time to put on the figures and letters of other men's work, and although a poor tracing can be improved by neat lettering, to excel in both should be everyone's desire.

A good instruction book on this subject is difficult to find. Most alphabet books are ridiculous in the extreme; it would take longer to make the letters they describe than the whole tracing. The tracings would look insignificant in comparison with the wonderful lettering. The letters and figures must conform to the other work—neither should be more conspicuous than the other. For this reason it is

preferable for each man to complete his own tracing. It is an easy matter to tell who made the various tracings in most drawing offices by the peculiar characteristics of each draftsman—this one by its poor lettering or that by a beautiful harmony of lines, letters and figures, the whole standing out in correct proportion, fine lines having small neat figuring, lettering, and narrow points to match, or heavy lines *vice versa*. Nothing looks more uniform, neater, or is quicker done than good, plain, one-line lettering, even for the titles, though perhaps a little display may be given to them.

A few samples are here given. The small letters are for the general working parts of the tracings, notes, etc. Headings should be a little

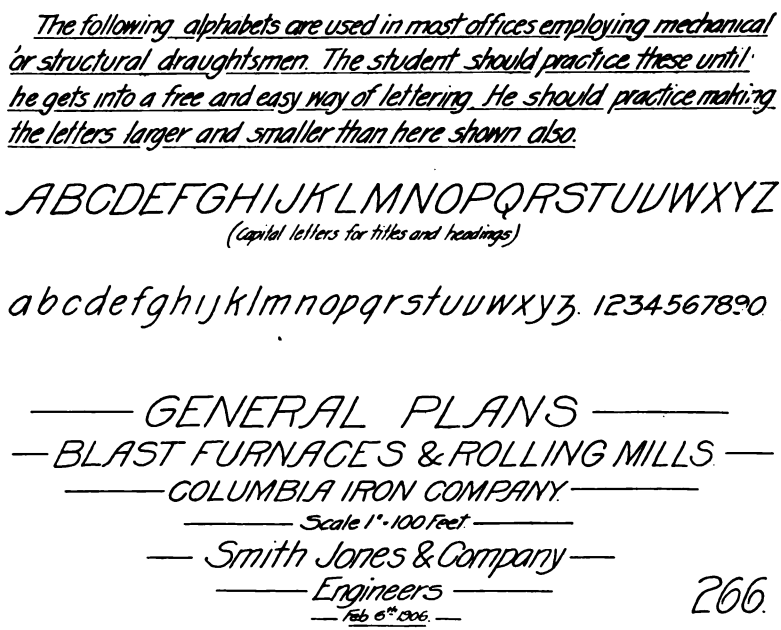
The following alphabets are used in most offices employing mechanical or structural draughtsmen. The student should practice these until he gets into a free and easy way of lettering. He should practice making the letters larger and smaller than here shown also.
ABCDEFGHIJKLMNOPQRSTUVWXYZ
(capital letters for titles and headings)
abcdefghijklmnopqrstuvwxyz. 1234567890
GENERAL PLANS
BLAST FURNACES & ROLLING MILLS
COLUMBIA IRON COMPANY
Scale 1"-100 Feet
Smith Jones & Company
Engineers
Feb 6th 1906.
266.

Fig. 27. Examples of Lettering

larger, and the title, which will be referred to later, should be distinguished from the rest of the work by using large letters, either blocked out, or capital letters made with a heavier pen. Figures should be made plain and simple, without the use of flourish or tail-piece. Fractions should be made with one figure immediately over the other, instead of to one side. The vertical system of figuring is preferable to the slanting, especially with shop tracings.

For lettering, have plenty of black ink, but not too thick. The best kind of pen points are Esterbrook's No. 333, or Gillot's 303 for fine work. A heavier pen must be used for titles. Make the letters and figures with one stroke of the pen; do not go over them again, but get the heavy required thickness, even with titles, by bearing on the pen

more. A pen can be tempered, when new, by holding it in the flame of a match, though pressing it on the thumbnail is generally sufficient.

Headings or Titles

The heading or title should be in a conspicuous place, and as far from anything which may tend to crowd it as possible. The bottom right-hand corner of the sheet is a good place. A heading sometimes looks better without lines drawn underneath, as shown in Fig. 26.

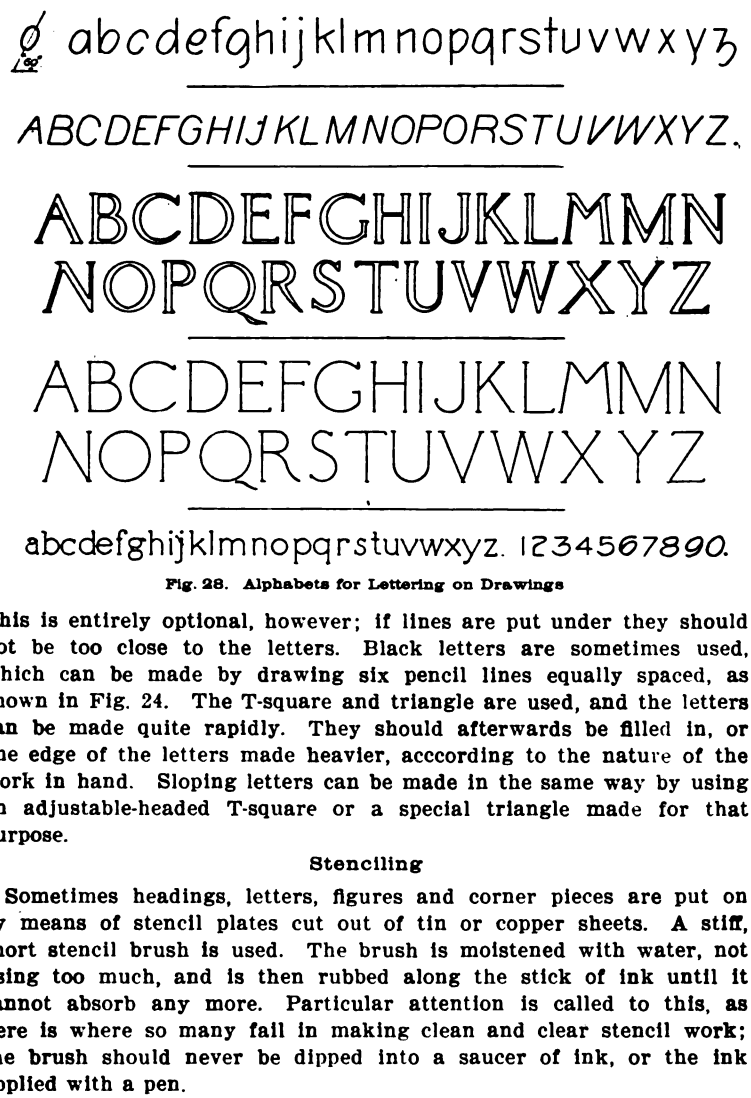

Fig. 28. Alphabets for Lettering on Drawings

This is entirely optional, however; if lines are put under they should not be too close to the letters. Black letters are sometimes used, which can be made by drawing six pencil lines equally spaced, as shown in Fig. 24. The T-square and triangle are used, and the letters can be made quite rapidly. They should afterwards be filled in, or one edge of the letters made heavier, acccording to the nature of the work in hand. Sloping letters can be made in the same way by using an adjustable-headed T-square or a special triangle made for that purpose.

Stenciling

Sometimes headings, letters, figures and corner pieces are put on by means of stencil plates cut out of tin or copper sheets. A stiff, short stencil brush is used. The brush is moistened with water, not using too much, and is then rubbed along the stick of ink until it cannot absorb any more. Particular attention is called to this, as here is where so many fail in making clean and clear stencil work; the brush should never be dipped into a saucer of ink, or the ink applied with a pen.

The position for the title having been settled, pencil lines should be drawn on the cloth as a guide for the stenciling. Sometimes the title or heading is stenciled upon a spare piece of cloth or paper first, then slipped into place under the tracing and the stencil work done over it. This is a good plan, as the correct position may thus be obtained. If this is not done, the only way is to make a pencil tick mark after each letter to indicate the position of the next, as, of course, the stencil plate will hide all beneath it except the letter being stenciled. Then the letters must each be filled in, as shown in the first two letters of Fig. 25.

Even when the stencil guide referred to is made and slipped into place under the tracing cloth, a pencil guide line should be drawn and all letters stenciled exactly to it. The pencil lines and ticks are then erased. If the brush becomes dry, it may be moistened on the tongue without again rubbing it on the ink stick. Draftsmen sometimes cut their own stencil plates out of stiff drawing paper, applying a coat of varnish on the upper surface.

Round Writing

When referring to alphabet books, the writer should have made one exception at least, and that is the round writing system. It is easily learned and not soon forgotten. Letters and figures of all sizes and shapes can be made by using different graded pens. Books of instruction and an assorted box of pens may be had from any stationery store of importance.

Mounting Tracing Paper

Tracings likely to be in hand a long time should be mounted to the drawing board, for several reasons. They will be protected from getting torn and will not shift on account of the sudden change of temperature of the room which may take place; they can also be cleaned more safely than if held by a few tacks. The paper should be cut large enough to allow for sticking the edges to the board, and should it be intended to color the tracing with liquid colors, twice the allowance should be made, as the paper will be cut after the tracing is made, and mounted the second time. The drawing to be traced should be laid down square with the board perfectly flat and level, then thoroughly dusted down to remove all obstructions, as these cannot be removed after the tracing paper is mounted.

A long, flat straight-edge with a couple of weights for each end is needed. Having cut the paper, dampen it slightly with a wet sponge, going over it very evenly and working quickly, so that it may be attached to the board before quite dry. The damp side must be up. The straight-edge is placed an inch outside of the cutting-off line and the weights put on, one at each end. Turn up the edge of the tracing paper, as shown in Fig. 29, and apply the mucilage or paste brush, pressing the edge down firmly with a straight-edged ruler or paper knife. The opposite side of the tracing paper is treated in the same way, and then the two remaining sides, care being taken to stretch

the paper carefully by pulling the edge of the paper gently with the tips of the fingers, before the weights are put on the straight-edge. Any superfluous water may be removed with a blotter. The whole operation, as before stated, should be done very quickly, as in a warm room the paper soon dries.

Mounting Paper for Coloring

Should there be any wash coloring to be done after the tracing is made, it is usually done on the back. The tracing is therefore taken up, cutting close to the pasted edge, so as to leave as much margin as possible for the second mounting. The drawing paper is also taken off the board and a clean white sheet, not so large, put in place of it. The tracing paper, being turned over, is again mounted to the board as previously described, care being taken to get no paste inside the cutting-off line, which should have been distinctly marked. While the

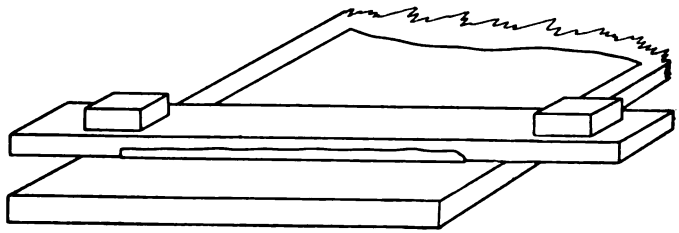

Fig. 29. Mounting Tracing Paper

paper is drying the colors can be mixed. Allow the coloring to thoroughly dry before cutting off the tracing, which should be done with a sharp knife, following the cutting-off line very carefully.

Mounting Cloth for Tracing or Coloring

The process described above is for paper tracings only. Cloth can be mounted in the same way, except that on no account should a damp sponge touch it, but it may be stretched without damping it at all, though not so satisfactorily. If the tracing cloth is put in a cold or slightly damp place over night it can be stretched very nicely, using a thin glue instead of paste. When one edge is firmly fixed, the other should be pulled very tight and extra weights put on the straight-edge to hold it in place while applying the glue brush. Mounting for coloring is done the same way, it being, of course, understood that the coloring is done only on the dull side of the cloth. Very satisfactory results can be obtained by not mounting tracing cloth at all, but simply using a number of iron tacks driven with a magnetized hammer, as elsewhere described.

Mounting Blueprints, Maps, Etc.

Blueprints, maps, drawings, old tracings, etc., are often mounted on linen or cotton to preserve them. The linen or cotton should be cut larger by several inches than the blueprint, and a drawing board about the same size used. Soak the linen well in water, wringing it out between the hands until all the superfluous water is squeezed out.

when it should be unfolded and shaken out. Lay it across the board and commence tacking one edge, beginning at the center and pulling gently; place a tack about every two inches along the edge of the board, as shown in Fig. 30. The other half of the same edge must be done in the same manner. The opposite edge is done next, stretching the linen well each time before a tack is driven; commence at the middle as before and work toward each end. The two remaining edges are done in exactly the same manner, and all is now ready for the paste, which should be prepared for use before the linen is stretched. The paste can be made either of starch or flour. A sufficient quantity is mixed in cold water to about the thickness of cream. Hot water is then poured over it, gently stirring it meanwhile; the whole is then put in a saucepan on the fire and stirred until it begins to boil over, when it is lifted from the fire, poured back again into the basin, and is ready for use. An apron of some kind is fastened around the neck, reaching to the knees, to protect the clothes from

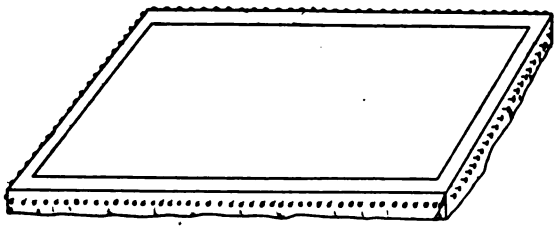

Fig. 30. Mounting Blue-prints and Maps on Linen

getting soiled. Taking some of the paste in the hand, slap it over the board, rubbing it well into the linen with both hands, using more paste if required, until the whole surface is covered. Now, commencing at the lower edge and at the left-hand end, holding the tips of the fingers close together push the superfluous paste along to the center of the board as you travel along from left to right. Go to the opposite side of the board and do the same thing, forming a ridge of paste along the middle of the board, which is scraped off with the hand into the basin. With both hands go all over the board again until the paste is nicely and evenly spread all over the linen.

An assistant is now required. The blueprint is dampened on the back with a sponge and placed gently in correct position on the linen. One-half is to be pasted at a time. The assistant holds it up by the two corners at an angle of about 30 degrees, while with a large blotter in one hand held to the print you rub gently but firmly over it, the assistant letting the print gently yield to the pressure you bring to bear upon it. Passing over to the other half, it is lifted from the board and then treated in the same way. Wherever an air bubble appears it can be pricked with a needle, and the blotting pad placed over it, while with a circular sweep of the other hand you press it firmly to the board. Should any obstruction unfortunately have been left between the print and the linen a slit can be made in the former and the obstruction removed when it is again pressed to the board.

The whole should thoroughly dry before any attempt is made to tear it from the board. Often this is not done till the following day. Cut through the print and linen with a sharp knife along the cutting-off line all around the board. Then, lifting the corner, pull gently but firmly in a slanting direction. The tacks and trimmings are then removed and the board cleared away. The case of a blueprint has been taken. Maps, drawings, etc., are done in precisely the same manner. Before the print is taken up, a coat or two of clear copal varnish is sometimes applied to preserve it still more.

Mounting Paper on Drawing Board

A quick and very satisfactory way of mounting drawing paper to the board, instead of using tacks, is resorted to by many draftsmen in the following manner: The paper is laid flat on the board, right side up. A moderate sized sponge filled with water is wiped all over the surface of the paper within an inch or so of the edge all around. The superfluous moisture is mopped up with the sponge, and the edges then dampened. One half of the sheet is turned precisely over the other half, edge for edge. With a well-filled mucilage brush go quickly around the three edges of the upturned half of sheet, and turning it over again, press the edges firmly to the board with the thumb or a flat, thin stick. Turn the other half of the sheet over the first and proceed in the same way. When thoroughly dry, the paper will stretch very satisfactorily.

Still another way of mounting paper is to lay the sheet down *wrong side* up and with a small glue brush dipped in liquid glue go all around the edge of the paper at once. Quickly sponge all over the surface with plenty of water, keeping clear of the glued edge. Having mopped up the superfluous moisture with a dry sponge, turn the paper completely over and stretch it to the board by going over the surface with the flat of the hand or a clean, dry duster, working from the center to the edges, pressing the latter all around firmly to the board with the flat of the thumb or a thin, flat stick or ruler. Either of these methods has been successfully used in many offices, especially architects', but for important work the method described under the head of "Mounting Tracing Paper," and illustrated in Fig. 29, should be resorted to.

CHAPTER III

CARD INDEX SYSTEMS

It is evident that the index system suitable for one drawing-room may not be exactly what is wanted in another, where a different product of manufacture, and different conditions in general, call for some individual modifications. It is therefore necessary to assume, perhaps, that the index systems outlined in the following may not be directly applicable to a majority of drafting-rooms, but the general principles involved will be, and ought to be, used as guides in devising any drawing-room card index system.

Index System for Drafting-room with a Great Variety of Work *

The greatest difficulty in devising a satisfactory index system is met with in shops having to deal with a great variety of work. For drafting-rooms in shops where the product is limited to only a few

Drawing No. A-612 **Date** March 6 1905

Drawn by M. C-r **Checked by** Potter

Casting Detail:
Special head for #2
Brown & Sharpe Milling Machine.

Piece No. 656

Remarks: For construction see A-109.
For milling hexagon nuts.

Fig. 31. Index Card for Shop Drawing

standard machines, or articles, which are turned out in great quantities, the problem is a comparatively easy one. But in the case where, even if the shop be comparatively small, the accumulation of drawings, sketches, patterns, and such tools as the drafting-room is often expected to take care of, becomes of a vast scope even in a few years, on account of the variety of work, a more detailed system becomes necessary.

The system indicated in the following may, at first glance, seem somewhat elaborate, but a little extra expense added in the beginning will more than repay itself in the long run. The main factor to be taken in consideration when planning a system is, of course, the rapidity with which a thing looked for can be found. The somewhat

* MACHINERY, September, 1905.

greater care needed to keep up a complete system will hardly amount to anything compared with the time wasted in trying to locate things looked for in an incomplete and patched up card index system.

The words, "drawing," "shop sketch" and "customer's sketch" referred to below are defined in this system thus:

Drawing.—Any tracing or drawing for machines, tools and devices manufactured by the firm as a standard article or used in the shop.

Shop sketch.—Any drawing, made in the drawing-room, of special tools that are ordered in small quantities by customers.

Customer's sketch.—Any drawing, tracing, sketch or blueprint that has been sent to the firm by outside parties or customers.

The drawings are indexed on cards (see Fig. 31) on which is stated:

1. Number and letter of drawing (the letter indicating the size of the drawing).
2. When made.
3. By whom made.
4. By whom checked.
5. Complete title of the drawing.
6. Piece number (if a casting, this is also the pattern number).
7. Remarks.

These cards are numbered, when they are blank, with the drawing numbers in rotation, and are kept in numerical order. As soon as a drawing is made, the first blank card is filled out and its number stamped on the drawing. The card is then placed in the index, according to the following rules: In the first place, tools and machines should be indexed in general classes, and all general attachments for the machines should be indexed under the heading of the machine with which they are used. For example, cutters of every description should be indexed under the word "Cutter," and sub-headings should be provided in the index if the number of cutters of different descriptions make a sub-division necessary. Again, for example, "Dividing head for milling machine" should be indexed under "Milling Machine" and sub-divisioned under "Head." Fig. 32 of an index arranged in this manner will make further explanations unnecessary.

Jigs and fixtures that are to be used for certain operations in manufacturing parts of standard machines and tools are indexed in the same divisions as the parts on which the operation is to be performed are indexed under; for example, a fixture for boring head for milling machine is indexed under "Head" for "Milling Machine." In cases where it is found difficult to decide under which heading to place a certain tool or fixture, it is advisable to make out two or even more cards under such headings where they are most likely to be looked for. The files for the cards should be kept in the most accessible place in the drafting-room, where everybody having to use them can do so with convenience.

The drawings are filed in drawers in the drawing-room, but a "record blueprint" of each ought to be kept in a fireproof safe or vault; of course one must be very particular about replacing these "record blueprints" every time a change is made on the original tracing or drawing.

Sketches, as a rule, being used only a very limited number of times, ought not to be traced, but drawn either in copying ink or copying pencil, and copied in a special copybook used for the purpose. The sketch is marked with the page number of the copybook where it is copied. These sketches could, of course, be indexed on the index pages of the copybook, but when one copybook after another is filled out it would be a waste of time to have to go through the index of each

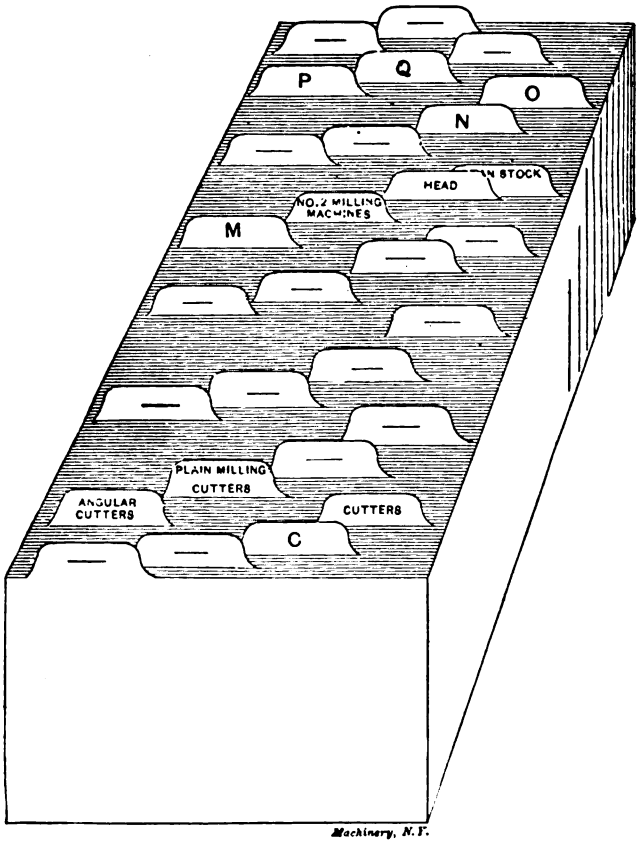

Fig. 32. Arrangement of Index Cards in File

one in order to find what is wanted; therefore a card index is provided for these sketches also, where the cards are put in order according to the names of the customer.

There is also an additional card index for these sketches where the cards are put in order, not with reference to name of customer, but according to name and kind of tool drawn on sketch. Customer's sketches are not listed in any card index, but are kept in proper order in a common letter-file.

There is no need of providing for a card index for the patterns, as

the pattern numbers are always marked, not only on the drawing itself, but also on the index card for the drawing in question. However, it is both convenient and necessary in many cases to be able to tell from the number of the pattern what machine or tool this pattern applied to; therefore a book is provided with pattern numbers in rotation, where the patterns are entered as soon as a drawing is made.

It is not only necessary to keep a good record of drawings or pat-

No. of copybook 6 **Page** 314 **Date** March 12 1905
Drawn by G. R. **Checked by** Potter
Customer's name: American Tool Works Co.,
Cincinnati, Ohio.
Tool: Taper Reamer.
Remarks: For Brass--made to their sketch.

Fig. 33. Card in Index Arranged According to Name of Customer

terns that have been made, but equally as important to have a complete record of blueprints, sketches, patterns, etc., when in use. All blueprints given out from the drawing-room must be charged to the person for whose use it is furnished, whether he be some one in the shop or an outside party. For this purpose there is a special set of cards, one card for each drawing, this card being provided with the drawing number; these cards are kept in numerical order. When a

No of Copybook 6 **Page** 314 **Date** March 12 1905
Drawn by G. R. **Checked by** Potter
Tool: Taper Reamer.
Customer's name: American Tool Works Co.,
Cincinnati, Ohio.
Remarks: For brass--made to their sketch.

Fig. 34. Card in Index Arranged According to Class of Tool

blue-print is given out by the drafting-room, the name of the person for whose use the blue-print was given out, is recorded on the card with the same number as the drawing. This enables anyone to find at a glance where every blueprint of a certain drawing can be found.

When sketches are sent out in the shop, it is noted in the copybook itself on corresponding page, to whom and on what date, sketch was given out. As these sketches have to go from one department to another, each department foreman is expected to keep a record of

when and to whom he sent the sketch, when he was through with it. When the work is finished, the sketch is returned to the drafting-room and the date when it was returned is noted down in the copybook on page number corresponding with sketch. Customer's sketches are never sent out in the shop, but are kept as records and for reference in the letter-file mentioned above.

A system laid out and made up in accordance with the principles above will prove itself very satisfactory, not to say necessary, for the drafting-room in a shop having a great variety of work to do.

Card Index in the Jobbing Shop *

The index system of the drafting-room in a general jobbing and repair shop also offers difficulties. The system for such a drafting-

NAME BROWN & Co -

ORDER NO.	NAME OF MACHINE	SIZE	HAND	MACHINE NO.	DWG. NO.
1157 '06.	HORIZONTAL ENGINE	12 X 12	L-H.	231	52-A.
1078 '06.	HOIST - ELECTRIC	200 HP	R-H	273	12-A.
132 '07.	BOILER - HORIZONTAL R.T.	48'X12'-0	——	325	46-A.
3746 '07.	—— VERTICAL MARINE	42"X7'-0	L-H	700	722-A.
627 '07.	SPLIT PULLEY	66"X27"		1172.	7237-B.
233 '07.	ROPE PULLEY & SHAFT	12'-0"		928	1023-C
3887 '07.	PORTABLE BOILER	48"X14'-0	R-H	7280	61-F.
3873 '07.	BOILER - SCOTCH	5'-6"X10'-0"	——	2122	72-F.

Fig. 35

room, as outlined below, has been devised by a man in charge of a shop doing a general line of repair work and some building of new machinery, in a place where there is little scope to take up any standard line of work or even to make the same machine twice without alteration. To avoid endless confusion, he has found it necessary to evolve some system of keeping records of the machines and parts of machines sent out, as well as of the drawings, and his experience undoubtedly will prove useful to others having to work under similar conditions.

In most shops of this kind a part of the work is done to blueprints or sketches supplied by the customer, and part to drawings made by the firm's own staff; and the patterns are sometimes the customer's property and sometimes the firm's. The remainder of the work is repairs, overhauling, refitting, etc., of which no record need be kept. The problem resolves itself into these requirements: First, to be able to find at any time the drawing to which any part of any machine was made, given the customer's name. Second, to have a complete

* MACHINERY, June, 1907.

index to all patterns, drawings, foreign blueprints, etc., to save duplication of any of these where they can be worked in on another order.

On receipt of an order from a customer it is written out on a form, a copy of which goes to the drawing office, pattern shop, boiler shop and machine shop, or such of these departments as have work to do on that order.

We will suppose that this order is for a machine to be made to the firm's own drawings. The drawing office then, on receipt of this order, makes out a production sheet on bond paper forms, giving name and number required of each part, drawing number, pattern number if a casting, and material of which it is made. This production sheet should include everything required, bolts, nuts, oil-cups, gaskets, split pins, name-plate and every detail, no matter how small. In the case

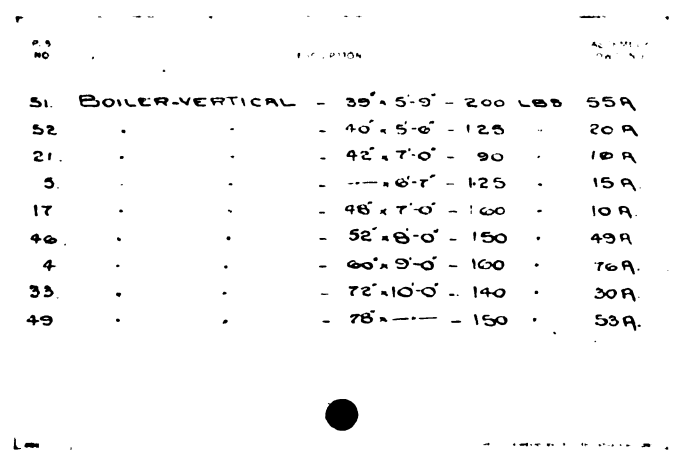

Fig. 36

of forgings, it should give, in addition to drawing number, the length and size of bar required to make it. The required number of prints should then be made from the production sheet, and the order number, name of customer, date issued and number of machines required (the production sheet should always be made out for one machine only) put on the prints, and not on the original, as this may be used again later, on other orders. One print should then be sent to the stores department, to order the material from, and one to each of the different departments having work to do on that order, the pattern shop having to issue the patterns and orders to the foundry department. Also one print should be filed away as a record under the order number, preferably in an envelope, together with any special specification or other matter referring to that order only; these will be kept in numerical order and should be stored in a fireproof vault, but in a convenient place for reference. The original can now be altered to suit any future orders or improvements in design without affecting our record of that order. Any alterations to the drawings for subsequent orders

are also made in such a way that there is a record of the original dimensions.

Now, to duplicate any part of an old order, we have a card index of the production sheet prints that are filed under their order numbers. These cards are indexed alphabetically under the customer's name; a copy of the card is shown in Fig. 35. This card is filled out for each order for that firm and filed away in the index cabinet. Therefore, given the customer's name, we can, by consulting this index, find the order number under which his machine was built, and by getting out the production sheet print for that order number we get the drawing numbers we require.

The columns for size and hand save us the necessity of looking up two or three production sheet prints, as, for instance, if we get an order for a set of grate bars, same as supplied by us with a 48-inch

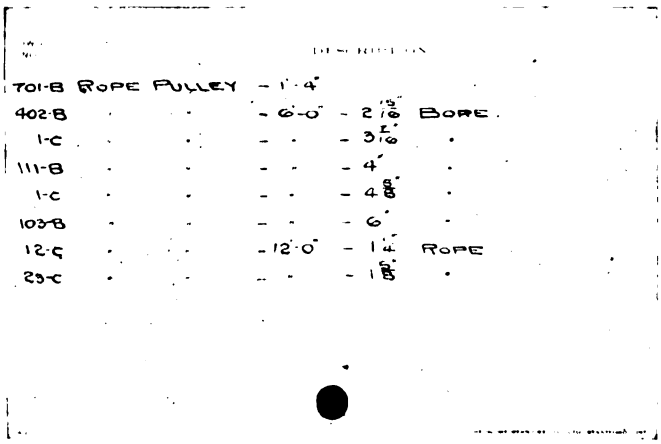

Fig. 37

boiler for Brown & Co., we look under Brown for Brown & Co.'s card, and then down that card till we come to a 48-inch boiler, which will give us the order number, and from the production sheet print for that order number we can get the pattern number and number required. If we had not the size on the card we might have any number of boilers built by us for that firm to look up in the production sheet prints before we found the 48-inch size.

The Machine No. column is used in case a customer sells his machine to some one else, the number being stamped on the name-plate of the machine.

The Drawing No. column gives the assembly drawing number, and may save time if one wanted only an assembly drawing, but it is primarily intended for orders such as stacks, smoke connections, etc., which require only one drawing. No production sheet is made for such orders, a bill of material on the drawing giving all information required.

The original production sheets have a card index with alphabetical guide cards, and are indexed under the name of the machine, as boiler under B. A copy of these cards is shown in Fig. 36. The production sheets are numbered in order, as made. The shop drawings are indexed alphabetically under the name of the part. These drawings are numbered and filed consecutively as made, and are given the suffix A or B. A is the large size (18 x 24-inch) and B the small size (9 x 12-inch). The A and B drawings are numbered and filed independently of each other. The cards for indexing these drawings are shown in Fig. 37. Each part of a machine is on a separate card, and the cards are rewritten from time to time to keep the parts on the card in order of size, smallest size at top, as other similar parts of different sizes are made and interpolated.

If the order should be to make a machine to the customer's blue-

NO.	NAME OF FIRM	DESCRIPTION	PRINT NO.
36-D.	LONDONDERRY I. & M. Co.	STACK - 1'-10"	48.
39-D.	MABOU & GULF COAL CO	" - 3'-0"	50.
35-D.	ACADIA COAL CO	" - 3'-4" x 50'-0"	72.
38-D.	MABOU & GULF COAL CO	" - — — x 60'-0"	71.
82-D.	JOHN BLACKLOCK & Co.	" - 3'-0" x 65'-0"	84.
81-D.	R. GARRETT & CO.	" - 4'-0" x 70'-0"	97.
42-D.	B. A. MARTIN MACHINE CO	" - 4'-6" x 75'-0"	195.
45-D.	NOVA SCOTIA STEEL & COAL	" - 5'-0" x 80'-0	372.
700.	U-S. STEEL CORP[N].	" - 5'-6" x 85'-0"	170.

Fig. 38

prints, we number these prints consecutively, starting with the number after that given to the last blueprint on the previous order, and giving it the suffix C or D, as 125-C. The suffix C indicates that the patterns shown on that print are our property, and the suffix D indicates the reverse. These prints are folded and put in envelopes bearing the same number, and are filed away in consecutive order, the C and D prints being in separate drawers. The C prints are indexed with our own A and B drawings, so that we have on the cards a complete list of all sizes of patterns or designs we have of that particular part. The D prints are indexed under the name of the part, the card being shown in Fig. 38. The column for print number is for the number given the print by the customer, and Name of Firm is the name of the customer or owner of the print; these two columns are for purposes of ready identification.

The foregoing is only a bare outline of the system, but it will be sufficient to show its cheapness and adaptability to the work required of it.

Limiting the Volume of the Card Index*

While the card index has proven a valuable aid in facilitating the drawing-room work, it is, however, apt to become rather voluminous if the business is a growing one, and even though one may add all the card index guides possible, dividing the index into classes and sub-divisions, there will invariably be some sub-divisions that will contain more cards than are convenient to look through every time a drawing is to be found.

For this reason a system based upon a principle of classification, as described below, will make the index less voluminous, and at the same time permit a saving of time when looking up a drawing. It is the usual practice to make one card for each drawing indexed. This is, however, not necessary as long as there will always be a certain number of drawings of the same kind of tools or articles that can conveniently be listed on the same card. The card depicted in Fig. 39 shows

CLASS.... ...Milling Machine Fixtures.
SUBDIVISION..Fixtures for parts of Multi-spindle Drills.

FIXTURES FOR FEED RACKS.

No. of Drawing.	Date Issued.	Draftsman..	Description.	Date Superseded
2716	6 13-1904	Smith	For 4-spindle drill, 1⅛ center-distance.	12-31-1905
3563	9-27-1905	Leland	For 3-spindle drill, 1⅛ center-distance.	.....
4716	12-30-1905	Leland	For 4 spindle drill, 2¼ center-distance.	.....
4719	12 31-1905	Leland	For 4-spindle drill, 1⅛ cen ter-distance.	.....

Fig. 39. Index Card Adopted to Save Space

plainly the principle employed in regard to using the index guides, having first guides for general classes, and then for sub-divisions. On the third line of the card is given the general name of the class of articles for which the drawings on this card are made. The remainder of the card can be used for filling out from time to time additional drawings belonging to this same general description. It will be seen that by means of this system the card index can be easily reduced to a fraction of its original volume. As the draftsman is well aware, the average life of a drawing is rather short, and still, as superseded drawings have often to be referred to, it is well to systematize the drawing-room so that the superseded drawings are kept on file right with the regular ones, but marked "superseded," and with the date the reissue took place. In order to save unnecessary delay in looking up a drawing, the date when the drawing was superseded should also be marked on the card in the index. With the exception of these remarks, the picture of the card will explain its purpose, and

* MACHINERY, September, 1906.

its general usefulness. Systems of this character have proved a time-saving suggestion to many drawing-rooms that used to work under difficulties with rapidly expanding card-index systems.

Blue-print Record Card *

A firm whose line of work is such that improvements and changes of designs and details are constantly being made, must by necessity devise some system of properly keeping track of the blue-prints in the factory. In an establishment where there are several hundred prints in twenty to twenty-five different departments, it is very necessary that there be some good system of keeping in touch with every blue-print, in order that the proper ones may be corrected when a change is made.

The card shown in Fig. 40 is one used to great advantage by The Garford Co., to keep track of all blue-prints issued from the drafting-

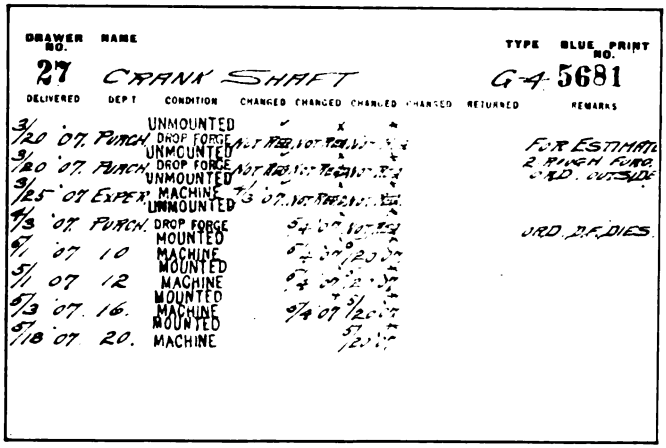

Fig. 40. Blue-print Record Card

room. Each detail is drawn on a separate standard sheet, and mounted on pressboard for the shop. Each department has a complete book of blue-prints for each type of machine. When a change is made on a drawing, a new blue-print is made to supersede each blue-print in the factory. On issuing a blue-print from the drafting-room, a card like that in Fig. 40 is filled out. The name of the piece is entered in the place marked "Name." Blue-print number and drawer number (which is the drawer where the tracing is filed) are placed on with a stamp in their proper places. In the column marked "Delivered" the date is entered, and the department number placed in the column marked "Dep't." Under the heading "Condition," the mounting and kind of the blue-print is noted, either mounted or unmounted, machine, drop-forge or pattern drawing. For this, a rubber stamp is used. When a change is made in the tracing, by looking on the proper card.

* MACHINERY, August, 1907.

it is readily seen where the blue-prints are, and which ones are to be changed. In the column "Changed," the date when the new blue-print is delivered and the old one is returned, is noted. If for any reason it is not necessary to change the blue-print in some departments, a check or some other mark is placed in the space instead of the date, and a similar check or mark placed on the back, and the reason noted. If, for instance, the piece is a casting and some drilled hole were changed from one-quarter inch to three-eighths inch, it would not be necessary to change the blue-print in the pattern shop. Each department has its own blue-prints, and they are never delivered from one department to another without first going through the drawing-room. When a department is through with the blue-print, it is returned to the drawing-room, and the date entered in the column marked "Returned."

Card Index for the Draftsman's Individual Records *

While in the up-to-date drafting-room the card index found early acceptance, and has become a necessary adjunct for the keeping of

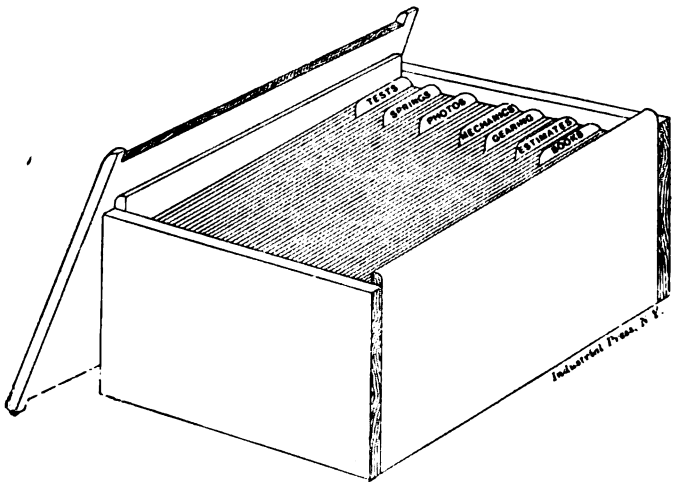

Fig. 41. Card Index for the Draftsman's Individual Records

records of various kinds, there is, however, a place in the drafting room for the card index where it has yet to be more generally adopted, and that is as an individual adjunct to each draftsman's outfit. Years ago Nyström said: "Every engineer should make his own pocketbook, as he proceeds in study and practice, to suit his particular business," and there is no better way of compiling a pocketbook than by the use of the card index. Outfits for the purpose may be purchased in all styles and prices, from the trial outfit of 3 x 5 cards, in a pasteboard case and costing about 75 cents, up to the most elaborate cases and trays for the 5 x 8 cards.

* MACHINERY, November, 1903.

Fig. 41 is a sketch of a very cheap and serviceable index box that can be readily put together in the pattern shop, and is in some ways better suited to this particular purpose than those purchased of the regular dealers in such goods. Being made of ½-inch pine, planed down to about ⅜ inch, it is very light and much more easily handled than the regular cases, which are usually made of oak. Another point in its favor is that it can be made much shorter than any of the regular trays which come in lengths of from 12 to 14 inches, and are, therefore, of a size that would prove unhandy upon a draftsman's board. A package containing 100 index cards of medium weight measures a little less than an inch in thickness, so that a box 4 or 5 inches deep will hold a sufficient number of cards to cover a long period of the average draftsman's experience. The object should be to compress

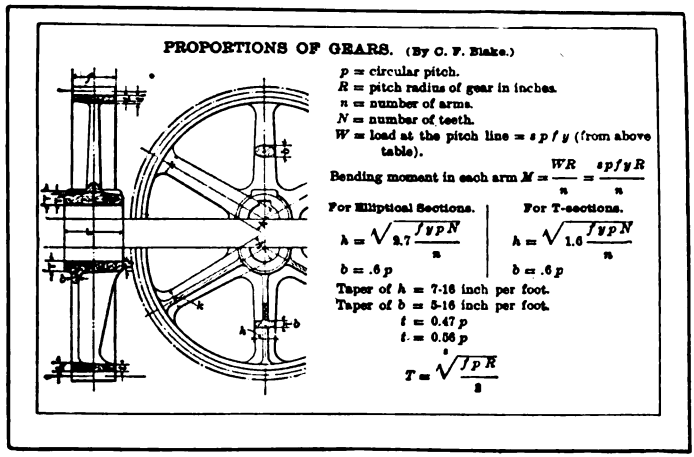
PROPORTIONS OF GEARS. (By C. P. Blake.)
p = circular pitch.
R = pitch radius of gear in inches.
n = number of arms.
N = number of teeth.
W = load at the pitch line = s p f y (from above table).
Bending moment in each arm M = WR/n = spfyR/n
For Elliptical Sections.
For T-sections.
b = .6 p
b = .6 p
Taper of h = 7-16 inch per foot.
Taper of b = 5-16 inch per foot.
t = 0.47 p
t = 0.06 p

Fig. 42. The Card Index used for Clippings

the entire outfit into size and weight which shall not greatly exceed that of an ordinary reference book.

Cards for these outfits are provided mainly in 3 x 5-, 4 x 6-, and 5 x 8-inch sizes, but if the index is to be put to all of the uses which are mentioned later, the cards should not be less than the 4 x 6-inch size. Either of the two larger sizes, if used in a short, light tray, will be found fully as convenient to handle as the ordinary tray for the smaller cards when it is of the usual length and constructed of oak. The cards chosen should be of sufficient size to allow of fairly lengthy computations, and for mounting complete tables and similar data clipped from periodicals. If home-made cards are to be used they can be easily cut from manila or stiff white drawing paper, and will answer the purpose very satisfactorily. Guide cards are cut from the same material and labeled to suit the matter to be indexed. In the case illustrated no provision whatever is made for locking the cards in, as none is considered necessary. When it is desired to refer constantly to a certain card or cards they may be easily slipped out and placed

on the drawing board for the time being, and any device which makes it necessary to lock and unlock in order to do this, or to remove and add cards, will, after a short trial, be found to be more of an objection than an advantage.

The uses to which the index can be put will suggest themselves to each draftsman as the requirements of his work present them. In the first place there are certain tables to which every draftsman must constantly refer, and these should form a foundation of the index system. Such data as decimal equivalents, squares and cubes, trigonometrical functions, etc., furnish the most natural beginning. These are to be found in the handbooks in common use, such as Kent and Nyström, but when only one table is needed for a particular use, the convenience of drawing out a single card over the necessity of handling the whole book, will at once be apparent. Often several tables

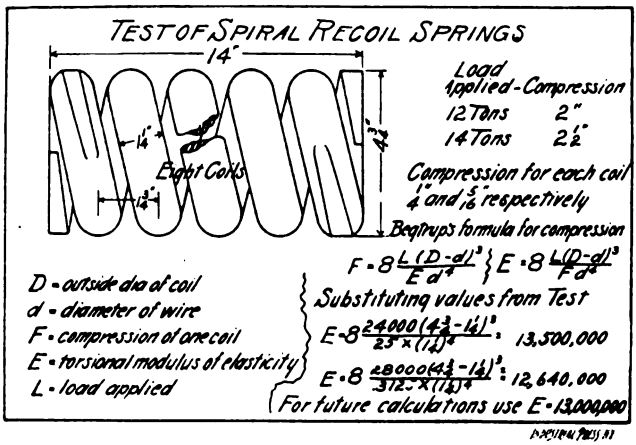

Fig 43. The Card Index used for Record of Tests

are used at the same time, and then the pages of the book must be turned back and forth, or, perhaps, two or more books must be referred to. With the index system any number of cards may be placed side by side where the draftsman may refer to them without trouble. Having started with the tables most commonly used the index will grow with considerable rapidity. If any unfamiliar table or data is to be consulted, much time may be lost in searching for it through the different handbooks, but if, when found, it is copied on to an index card, it is then ready for immediate use if again needed. Clippings from periodicals have before been referred to, and the value of a year's subscription to any good technical publication will be wonderfully increased if all of the data that is published pertaining to one's particular line of work is placed upon the cards. Fig. 42 is an illustration of a data card upon which is mounted one of the tables taken from a MACHINERY data sheet.

Reviews of all technical books that the owner reads should find a

place upon these cards. To thoroughly digest any book there is no better plan than to make notes and extracts as the reader proceeds, and if these are afterward placed in his index, they will often prove of the greatest value.

In many drawing-rooms the draftsman is provided with a note book in which to record all calculations, estimates, and other computations that may arise in connection with his work. After one of these books has been in use for several months, and a mass of calculations has accumulated therein, it is a most tedious job to search them over for the figures applying to the matter in hand. If, however, the calculations are made upon index cards and filed under appropriate headings, they may be found at a minute's notice.

A draftsman is often called upon to design certain pieces of mechanism in which the strength of the material must be taken from general

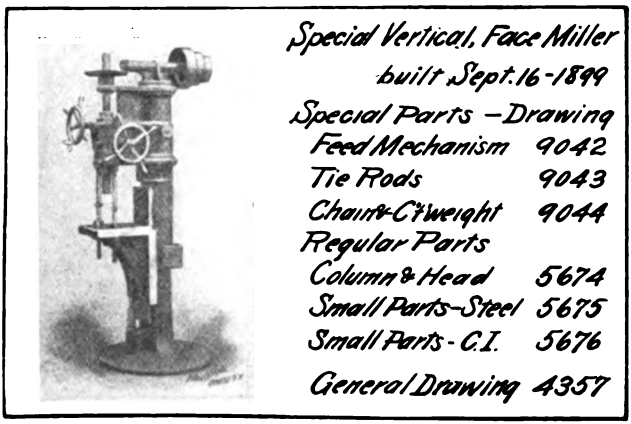

Fig. 44. The Card Index used for Record of Special Machines

data and may vary considerably from the strength of the material actually used. In such a case it may be practical to make subsequent tests and from these to obtain definite data. The card shown in Fig. 43 is taken from an index compiled by a designer for the purpose of recording such data, and serves to illustrate the way in which the results of such tests can be kept for ready reference. The problem in this case was to design a spring that should stand a load of about 25,000 pounds and to determine its deflection when loaded. The spring was designed and the compression figured by Begtrup's formulas, in which the modulus of elasticity is given as from 10,000,000 to 14,000,000, and the exact modulus to be used is left to the judgment of the designer. After these springs were made they were tested, with the results shown on the card, and substituting the actual deflection for given loads we are able to determine a modulus of elasticity, in this case about 13,000,000, which can be regarded as comparatively exact data for use in designing springs that are to be made of the same

material and to perform similar duty. If similar comparisons be made of castings and forgings of various kinds, we soon accumulate a quantity of very reliable information that applies more closely to our particular cases than any published data which must, at best, be only general in its nature.

Photographs of machines built, and data connected with them, will prove valuable additions to the index. Fig. 44 shows a record of a special vertical milling machine, and explains just which parts were special and which regular, and provides a complete record of the drawings used and any information that would be of aid to the draftsman if called upon to design a similar machine at some future time.

No. 39. Fans, Ventilation and Heating.—Fans; Heaters; Shop Heating.

No. 40. Fly-Wheels.—Their Purpose, Calculation and Design.

No. 41. Jigs and Fixtures, Part I.—Principles of Jig and Fixture Design; Drill and Boring Jig Bushings; Locating Points; Clamping Devices.

No. 42. Jigs and Fixtures, Part II.—Open and Closed Drill Jigs.

No. 43. Jigs and Fixtures, Part III.—Boring and Milling Fixtures.

No. 44. Machine Blacksmithing.—Systems, Tools and Machines used.

No. 45. Drop Forging.—Lay-out of Plant; Methods of Drop Forging; Dies.

No. 46. Hardening and Tempering.—Hardening Plants; Treating High-Speed Steel; Hardening Gages; Hardening Kinks.

No. 47. Electric Overhead Cranes.—Design and Calculation.

No. 48. Files and Filing.—Types of Files; Using and Making Files.

No. 49. Girders for Electric Overhead Cranes.

No. 50. Principles and Practice of Assembling Machine Tools, Part I.

No. 51. Principles and Practice of Assembling Machine Tools, Part II.

No. 52. Advanced Shop Arithmetic for the Machinist.

No. 53. Use of Logarithms and Logarithmic Tables.

No. 54. Solution of Triangles, Part I.—Methods, Rules and Examples.

No. 55. Solution of Triangles, Part II.—Tables of Natural Functions.

No. 56. Ball Bearings.—Principles of Design and Construction.

No. 57. Metal Spinning.—Machines, Tools and Methods Used.

No. 58. Helical and Elliptic Springs.—Calculation and Design.

No. 59. Machines, Tools and Methods of Automobile Manufacture.

No. 60. Construction and Manufacture of Automobiles.

No. 61. Blacksmith Shop Practice.—Model Blacksmith Shop; Welding; Forging of Hooks and Chains; Miscellaneous Appliances and Methods.

No. 62. Hardness and Durability Testing of Metals.

No. 63. Heat Treatment of Steel.—Hardening, Tempering and Case-Hardening.

No. 64. Gage Making and Lapping.

No. 65. Formulas and Constants for Gas Engine Design.

No. 66. Heating and Ventilation of Shops and Offices.

No. 67. Boilers.

No. 68. Boiler Furnaces and Chimneys.

No. 69. Feed Water Appliances.

No. 70. Steam Engines.

No. 71. Steam Turbines.

No. 72. Pumps, Condensers, Steam and Water Piping.

THE FOLLOWING TITLES ARE PREPARED, AND WILL BE BROUGHT OUT IN 1911

No. 73. Principles and Applications of Electricity, Part I.—Static Electricity; Electrical Measurements; Batteries.

No. 74. Principles and Applications of Electricity, Part II.—Magnetism; Electro-Magnetism; Electro-Plating.

No. 75. Principles and Applications of Electricity, Part III.—Dynamos; Motors; Electric Railways.

No. 76. Principles and Applications of Electricity, Part IV.—Electric Lighting.

No. 77. Principles and Applications of Electricity, Part V.—Telegraph and Telephone.

No. 78. Principles and Applications of Electricity, Part VI.—Transmission of Power.

No. 79. Locomotive Building, Part I.—Main and Side Rods.

No. 80. Locomotive Building, Part II.—Wheels; Axles; Driving Boxes.

No. 81. Locomotive Building, Part III.—Cylinders and Frames.

No. 82. Locomotive Building, Part IV.—Valve Motion and Miscellaneous Details.

No. 83. Locomotive Building, Part V.—Boiler Shop Practice.

No. 84. Locomotive Building, Part VI.—Erecting.

No. 85. Mechanical Drawing, Part I.—Instruments; Materials; Geometrical Problems.

No. 86. Mechanical Drawing, Part II.—Projection.

No. 87. Mechanical Drawing, Part III.—Machine Details.

No. 88. Mechanical Drawing, Part IV.—Machine Details.

No. 89. The Theory of Shrinkage and Forced Fits.

No. 90. Railway Repair Shop Practice.

MACHINERY'S DATA SHEET SERIES

MACHINERY'S Data Sheet Books include the well-known series of Data Sheets originated by MACHINERY, and issued monthly as supplements to the publication; of these Data Sheets over 500 have been published, and 6,000,000 copies sold. Revised and greatly amplified, they are now presented in book form, kindred subjects being grouped together. The purchaser may secure either the books on those subjects in which he is specially interested, or, if he pleases, the whole set at one time. The price is 25 cents a book.

TITLES AND CONTENTS ON BACK COVER

CONTENTS OF DATA SHEET BOOKS

No. 1. Screw Threads.—United States, Whitworth, Sharp V- and British Association Standard Threads; Briggs Pipe Thread; Oil Well Casing Gages; Fire Hose Connections; Acme Thread; Worm Threads; Metric Threads; Machine, Wood, and Lag Screw Threads; Carriage Bolt Threads, etc.

No. 2. Screws, Bolts and Nuts.—Filister-head, Square-head, Headless, Collar-head and Hexagon-head Screws; Standard and Special Nuts; T-nuts, T-bolts and Washers; Thumb Screws and Nuts; A. L. A. M. Standard Screws and Nuts; Machine Screw Heads; Wood Screws; Tap Drills; Lock Nuts; Eye-bolts, etc.

No. 3. Taps and Dies.—Hand, Machine, Tapper and Machine Screw Taps; Taper Die Taps; Sellers Hobs; Screw Machine Taps; Straight and Taper Boiler Taps; Stay-bolt, Washout, and Patch-bolt Taps; Pipe Taps and Hobs; Solid Square, Round Adjustable and Spring Screw Threading Dies.

No. 4. Reamers, Sockets, Drills and Milling Cutters.—Hand Reamers; Shell Reamers and Arbors; Pipe Reamers; Taper Pins and Reamers; Brown & Sharpe, Morse and Jarno Taper Sockets and Reamers; Drills; Wire Gages; Milling Cutters; Setting Angles for Milling Teeth in End Mills and Angular Cutters, etc.

No. 5. Spur Gearing.—Diametral and Circular Pitch; Dimensions of Spur Gears; Tables of Pitch Diameters; Odontograph Tables; Rolling Mill Gearing; Strength of Spur Gears; Horsepower Transmitted by Cast-iron and Rawhide Pinions; Design of Spur Gears; Weight of Cast-iron Gears; Epicyclic Gearing.

No. 6. Bevel, Spiral and Worm Gearing.—Rules and Formulas for Bevel Gears; Strength of Bevel Gears; Design of Bevel Gears; Rules and Formulas for Spiral Gearing; Tables Facilitating Calculations; Diagram for Cutters for Spiral Gears; Rules and Formulas for Worm Gearing, etc.

No. 7. Shafting, Keys and Keyways.—Horsepower of Shafting; Diagrams and Tables for the Strength of Shafting; Forcing, Driving, Shrinking and Running Fits; Woodruff Keys; United States Navy Standard Keys; Gib Keys; Milling Keyways; Duplex Keys.

No. 8. Bearings, Couplings, Clutches, Crane Chain and Hooks.—Pillow Blocks; Babbitted Bearings; Ball and Roller Bearings; Clamp Couplings; Plate Couplings; Flange Couplings; Tooth Clutches; Crab Couplings; Cone Clutches; Universal Joints; Crane Chain; Chain Friction; Crane Hooks; Drum Scores.

No. 9. Springs, Slides and Machine Details.—Formulas and Tables for Spring Calculations; Machine Slides; Machine Handles and Levers; Collars; Hand Wheels; Pins and Cotters; Turn-buckles, etc.

No. 10. Motor Drive, Speeds and Feeds, Change Gearing, and Boring Bars.—Power required for Machine Tools; Cutting Speeds and Feeds for Carbon and High-speed Steel; Screw Machine Speeds and Feeds; Heat Treatment of High-speed Steel Tools; Taper Turning; Change Gearing for the Lathe; Boring Bars and Tools, etc.

No. 11. Milling Machine Indexing, Clamping Devices and Planer Jacks.—Tables for Milling Machine Indexing; Change Gears for Milling Spirals; Angles for setting Indexing Head when Milling Clutches; Jig Clamping Devices; Straps and Clamps; Planer Jacks.

No. 12. Pipe and Pipe Fittings.—Pipe Threads and Gages; Cast-iron Fittings; Bronze Fittings; Pipe Flanges; Pipe Bends; Pipe Clamps and Hangers; Dimensions of Pipe for Various Services, etc.

No. 13. Boilers and Chimneys.—Flue Spacing and Bracing for Boilers; Strength of Boiler Joints; Riveting; Boiler Setting; Chimneys.

No. 14. Locomotive and Railway Data.—Locomotive Boilers; Bearing Pressures for Locomotive Journals; Locomotive Classifications; Rail Sections; Frogs, Switches and Cross-overs; Tires; Tractive Force; Inertia of Trains; Brake Levers; Brake Rods, etc.

No. 15. Steam and Gas Engines.—Saturated Steam; Steam Pipe Sizes; Steam Engine Design; Volume of Cylinders; Stuffing Boxes; Setting Corliss Engine Valve Gears; Condenser and Air Pump Data; Horsepower of Gasoline Engines; Automobile Engine Crankshafts, etc.

No. 16. Mathematical Tables.—Squares of Mixed Numbers; Functions of Fractions; Circumference and Diameters of Circles; Tables for Spacing off Circles; Solution of Triangles; Formulas for Solving Regular Polygons; Geometrical Progression, etc.

No. 17. Mechanics and Strength of Materials.—Work; Energy; Centrifugal Force; Center of Gravity; Motion; Friction; Pendulum; Falling Bodies; Strength of Materials; Strength of Flat Plates; Ratio of Outside and Inside Radii of Thick Cylinders, etc.

No. 18. Beam Formulas and Structural Design.—Beam Formulas; Sectional Moduli of Structural Shapes; Beam Charts; Net Areas of Structural Angles; Rivet Spacing; Splices for Channels and I-beams; Stresses in Roof Trusses, etc.

No. 19. Belt, Rope and Chain Drives.—Dimensions of Pulleys; Weights of Pulleys; Horsepower of Belting; Belt Velocity; Angular Belt Drives; Horsepower transmitted by Ropes; Sheaves for Rope Drive; Bending Stresses in Wire Ropes; Sprockets for Link Chains; Formulas and Tables for Various Classes of Driving Chain.

No. 20. Wiring Diagrams, Heating and Ventilation, and Miscellaneous Tables.—Typical Motor Wiring Diagrams; Resistance of Round Copper Wire; Rubber Covered Cables; Current Densities for Various Contacts and Materials; Centrifugal Fan and Blower Capacities; Hot Water Main Capacities; Miscellaneous Tables; Decimal Equivalents, Metric Conversion Tables, Weights and Specific Gravity of Metals, Weights of Fillets, Drafting-room Conventions, etc.

MACHINERY, the monthly mechanical journal, originator of the Reference and Data Sheet Series, is published in four editions—the *Shop Edition*, $1.00 a year; the *Engineering Edition*, $2.00 a year; the *Railway Edition*, $2.00 a year, and the *Foreign Edition*, $3.00 a year.

The Industrial Press, Publishers of MACHINERY,

49-55 Lafayette Street, New York City, U. S. A.

PRICE 25 CENTS

DRILL JIGS

PRINCIPLES OF DESIGN—EXAMPLES FROM PRACTICE—DIMENSIONS OF JIG BUSHINGS

THIRD EDITION

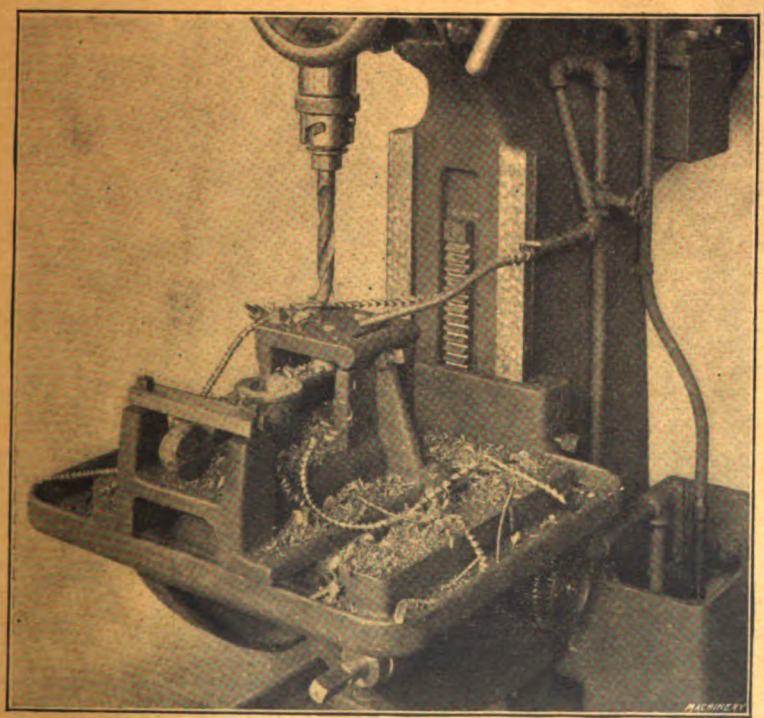

MACHINERY'S REFERENCE BOOK NO. 3
PUBLISHED BY MACHINERY, NEW YORK

MACHINERY'S REFERENCE BOOKS

This treatise is one unit in a comprehensive Series of Reference books originated by MACHINERY, and including an indefinite number of compact units, each covering one subject thoroughly. The whole series comprises a complete working library of mechanical literature. The price of each books is 25 cents (one shilling) delivered anywhere in the world.

LIST OF REFERENCE BOOKS

No. 1. Worm Gearing.—Calculating Dimensions; Hobs; Location of Pitch Circle; Self-Locking Worm Gearing, etc.

No. 2. Drafting-Room Practice.—Systems; Tracing, Lettering and Mounting.

No. 3. Drill Jigs.—Principles of Drill Jigs; Jig Plates; Examples of Jigs.

No. 4. Milling Fixtures.—Principles of Fixtures; Examples of Design.

No. 5. First Principles of Theoretical Mechanics.

No. 6. Punch and Die Work.—Principles of Punch and Die Work; Making and Using Dies; Die and Punch Design.

No. 7. Lathe and Planer Tools.—Cutting Tools; Boring Tools; Shape of Standard Shop Tools; Forming Tools.

No. 8. Working Drawings and Drafting-Room Kinks.

No. 9. Designing and Cutting Cams.—Drafting of Cams; Cam Curves; Cam Design and Cam Cutting.

No. 10. Examples of Machine Shop Practice.—Cutting Bevel Gears; Making a Worm-Gear; Spindle Construction.

No. 11. Bearings.—Design of Bearings; Causes of Hot Bearings; Alloys for Bearings; Friction and Lubrication.

No. 12. Out of print.

No. 13. Blanking Dies.—Making Blanking Dies; Blanking and Piercing Dies; Split Dies; Novel Ideas in Die Making.

No. 14. Details of Machine Tool Design.—Cone Pulleys and Belts; Strength of Countershafts; Tumbler Gear Design; Faults of Iron Castings.

No. 15. Spur Gearing.—Dimensions; Design; Strength; Durability.

No. 16. Machine Tool Drives.—Speeds and Feeds; Single Pulley Drives; Drives for High Speed Cutting Tools.

No. 17. Strength of Cylinders.—Formulas, Charts, and Diagrams.

No. 18. Shop Arithmetic for the Machinist.—Tapers; Change Gears; Cutting Speeds; Feeds; Indexing; Gearing for Cutting Spirals; Angles.

No. 19. Use of Formulas in Mechanics.—With numerous applications.

No. 20. Spiral Gearing.—Rules, Formulas, and Diagrams, etc.

No. 21. Measuring Tools.—History of Standard Measurements; Calipers; Compasses; Micrometer Tools; Protractors.

No. 22. Calculation of Elements of Machine Design.—Factor of Safety; Strength of Bolts; Riveted Joints; Keys and Keyways; Toggle-joints.

No. 23. Theory of Crane Design.—Jib Cranes; Shafts, Gears, and Bearings; Force to Move Crane Trolleys; Pillar Cranes.

No. 24. Examples of Calculating Designs.—Charts in Designing; Punch and Riveter Frames; Shear Frames; Billet and Bar Passes; etc.

No. 25. Deep Hole Drilling.—Methods of Drilling; Construction of Drills.

No. 26. Modern Punch and Die Construction.—Construction and Use of Subpress Dies; Modern Blanking Die Construction; Drawing and Forming Dies.

No. 27. Locomotive Design, Part I.—Boilers, Cylinders, Pipes and Pistons.

No. 28. Locomotive Design, Part II.—Stephenson and Walschaerts Valve Motions; Theory, Calculation and Design.

No. 29. Locomotive Design, Part III.—Smokebox; Exhaust Pipe; Frames; Cross-heads; Guide Bars; Connecting-rods; Crank-pins; Axles; Driving-wheels.

No. 30. Locomotive Design, Part IV.—Springs, Trucks, Cab and Tender.

No. 31. Screw Thread Tools and Gages.

No. 32. Screw Thread Cutting.—Lathe Change Gears; Thread Tools; Kinks.

No. 33. Systems and Practice of the Drafting-Room.

No. 34. Care and Repair of Dynamos and Motors.

No. 35. Tables and Formulas for Shop and Drafting-Room.—The Use of Formulas; Solution of Triangles; Strength of Materials; Gearing; Screw Threads; Tap Drills; Drill Sizes; Tapers; Keys, etc.

No. 36. Iron and Steel.—Principles of Manufacture and Treatment.

No. 37. Bevel Gearing.—Rules and Formulas; Examples of Calculation; Tooth Outlines; Strength and Durability; Design; Methods of Cutting Teeth.

No. 38. Out of print. See No. 98.

No. 39. Fans, Ventilation and Heating.—Fans; Heaters; Shop Heating.

No. 40. Fly Wheels.—Their Purpose, Calculation and Design.

No. 41. Jigs and Fixtures, Part I.—Principles of Design; Drill Jig Bushings; Locating Points; Clamping Devices.

No. 42. Jigs and Fixtures, Part II.—Open and Closed Drill Jigs.

No. 43. Jigs and Fixtures, Part III.—Boring and Milling Fixtures.

No. 44. Machine Blacksmithing.—Systems, Tools and Machines used.

No. 45. Drop Forging.—Lay-out of Plant; Methods of Drop Forging; Dies.

No. 46. Hardening and Tempering.—Hardening Plants; Treating High-Speed Steel; Hardening Gages.

No. 47. Electric Overhead Cranes.—Design and Calculation.

No. 48. Files and Filing.—Types of Files; Using and Making Files.

No. 49. Girders for Electric Overhead Cranes.

(See inside back cover for additional titles)

MACHINERY'S REFERENCE SERIES

EACH NUMBER IS ONE UNIT IN A COMPLETE LIBRARY OF MACHINE DESIGN AND SHOP PRACTICE REVISED AND REPUBLISHED FROM MACHINERY

NUMBER 3

DRILL JIGS

THIRD EDITION

CONTENTS

Elementary Principles of Drill Jigs, by E. R. MARKHAM 3
Drilling Jig Plates, by J. R. GORDON - - - - - 21
Examples of Drill Jigs - - - - - - - - - 27
Dimensions of Standard Jig Bushings - - - - 50
Using Jigs to Best Advantage, by B. P. FORTIN and J. F. MIRRIELEES - - - - - - - - - - 53

Copyright, 1913, The Industrial Press, Publishers of MACHINERY, 49-55 Lafayette Street, New York City

CHAPTER I

ELEMENTARY PRINCIPLES OF DRILL JIGS*

The reasons for the use of jigs may be summed up under three heads, the order in which they are stated representing fairly well the frequency of occurrence, though not necessarily the importance, of these reasons: First, reduction of cost; second, duplication; third, accuracy.

Let us first consider the question of cost. As no article can, as a rule, be sold in open competition with similar articles unless its cost is somewhat proportionate to the quality of its competitors, commercial considerations demand that the cost be kept as low as possible, while the quality be kept as high as possible; and jigs are one of the chief agents of this in metal work. When a jig is considered, the first thing to be settled is whether it can be made to pay, and if so, how much. The answer to this often involves very many other questions, but can generally, if not always, be resolved into computations based upon the number of pieces to be made, and the probable cost of labor per piece when made with and without a jig, and the cost of the jig, including maintenance. Also the fact that often a much less valuable machine, or one less busy, can be used with the jig, may be an important consideration. If no other factor than cost of production is involved, and it is found that the total cost of the jigged work will come very near that of the lot of articles when made without a jig, and no further order is in sight, it is pretty safe to abandon the jig idea; for it is apt to partake very much of the nature of an experiment, and the odds should be decidedly favorable to warrant the risk.

The second reason—the duplication of pieces—has a somewhat different foundation— though cost enters here also, as will be seen later. Suppose the part to be made is subject to wear or breakage, as in agricultural and textile machinery, guns, bicycles, etc. We know, for instance, the strong disinclination anyone has for buying a wheel, the makers of which have gone out of business. It is at once recognized that repair parts cannot be bought from stock dealers, but must be made at excessive cost and delay. So we have before us the importance to manufacturers that the buying public shall have confidence in the interchangeability of parts in order that sales may be made at all upon the open market. It is a fact that where this reason holds good, there is also the reason that costs will be lessened, because production of large numbers of parts is taken for granted. And in considering whether or not a jig shall be made, this combination of reasons militates strongly for the jig. There is also another equally important reason for jigs, based on costs and interchangeability—it is that, in

* MACHINERY, October, 1902; November, 1906; December, 1906, and January, 1907.

fitting and assembling, those parts which are exactly alike require a minimum amount of labor when putting in place. This, perhaps, one may, without danger of exaggeration, say is in most cases in the machine building business the chief consideration.

In the third place, accuracy is often attained only by the use of jigs. There are certain classes of work which could not be finished at all within the limits of accuracy demanded, if jigs of some sort were not used.

It will therefore be seen that the determination of whether a jig shall be made may rest upon a number of questions which often demand great care and practical experience to solve in the way best meeting the requirements of the case.

Drill Jigs

Drill jigs are used for drilling holes which must be accurately located, both in relation to each other and to certain working surfaces and points; the location of the holes is governed by holes in the jig through which the drill passes. The drill must fit the hole in the jig to insure accuracy of location. When the jig is to be used in drilling many holes, the steel around the holes is hardened to prevent wear. If extreme accuracy is essential, or if the jig is to be used as a permanent equipment, bushings, made of steel and hardened, are used to guide the drills.

General Considerations in Designing Jigs

The design of a jig should depend altogether on the character of the work to be done, the number of pieces to be drilled, and the degree of accuracy ncessary in order that pieces drilled may answer the purpose for which they are intended. When jigs are to be turned over and moved around on the drill press table they should be designed to insure ease and comfort to the operator when handling, and should be made as light as is consistent with the strength and stiffness necessary. Yet, we should never attempt to save a few ounces of iron, and thereby render the jig unfit for the purpose we intend to use it for. The designer should see that the jig is planned so that work may be easily and quickly placed in and taken out, and that it can be easily and accurately located in order to prevent eventual mistakes. As it is necessary to fasten work in the jig in order that it may maintain its correct position, fastening devices are used; these should allow rapid manipulation, and yet hold the work securely to prevent a change of location. Yet, while it is necessary to hold work securely, we should not use fastening devices which spring the work, or the holes will be not only improperly located, but they will not be true with the working surfaces or with each other. When finishing the surfaces of drill jigs and similar devices used in machine shops, the character of the finish depends entirely on the custom in the shop, for while in some shops it is customary to finish these tools very nicely, removing every scratch, and producing highly finished surfaces, in other shops it is not required, neither is it allowed, as it is considered a waste of time and an unnecessary item of cost.

Limits of Accuracy

When making drill jigs we must discriminate between measurements that must be *exact*, and those not requiring extreme accuracy; it is not considered good practice, and it shows poor judgment, to spend the amount of time necessary to locate a hole within a limit of variation of 0.001 inch or even closer, if a variation of 1/64 inch is insignificant. But if the holes must be located *exact* as to measurements, it is necessary to work as accurately as possible, and time cannot be considered a factor, provided a man improves every minute. Yet the fact that extreme accuracy must be observed does not warrant a jigmaker *wasting time*.

Before starting to work on tools of this character, the workman should first carefully look over his drawing, making himself thoroughly familiar with the construction, and making sure that the measurements given are, seemingly, correct; if in doubt about anything, consult the foreman, or the draftsman—according to the custom in the shop—in order that every detail may be thoroughly understood, or that any mistake made in the drawing may be rectified.

Many times one draftsman is puzzled to understand a drawing made by an equally good man, especially so if the work is foreign to him; and a shop man, who may not be very well versed in reading drawings—yet be an excellent workman—may easily get puzzled when he attempts to read a drawing of work he is not familiar with. Inquiries and proper explanations are therefore in place, and there should be no hesitation about asking questions, nor any reluctance about replying to them.

Provisions for Chips and Burrs

It is necessary when designing tools of any character, whether they be cutting tools or fixtures for holding work while machined, to make provision for the chips. These are liable to get into drill jigs, and despite ordinary care, get under the work or between it and the locating points. In order to do away, so far as possible, with this tendency, it is advisable to cut away as much of the seating surface as can be spared, and to locate stops away from the seating surface, if possible. The seating surface should be smooth enough so that chips will not adhere to it, and so that waste will not stick to it, but it should not be a polished surface, as we would in all probability get it out of true, if we attempted to polish it. If chips are allowed to get under the work it will not be drilled true; that is, the holes will not be at the proper angle with the working surface, and consequently the piece will be unfit for most purposes.

Many operations of machining are almost sure to throw a burr on one side of the piece, and in shops where quantities of work of the same kind are machined, many employes are kept busy removing these burrs in order that they may not interfere with the proper seating of the pieces during the succeeding operations. While the operation of removing the burr on a single piece of work may not incur great cost, yet when thousands of pieces are machined each day, the aggregate cost constitutes quite an item of expense, and the successful manager

is he who so far as possible eliminates the small items of expense, knowing that many small items of expense amount to a large item in the aggregate. Not only is the operation of burring expensive, but as the class of help usually employed to do this work is unskilled, surfaces are many times left in a condition anything but satisfactory. As a consequence, the surfaces of jigs, milling machine fixtures, etc., are many times cut away to receive these burrs, thus doing away with the necessity of burring, as it many times happens that subsequent operations remove the burrs. In Fig. 1 is shown a piece of work having a burr thrown up at *a*, while Fig. 2 represents a surface cut away to receive the burr.

Factors Determining the Advisability of Using Jigs

When we wish to drill two holes a given distance apart, the location of the holes is obtained by means of a pair of dividers set to a scale. The location is obtained and prick punched, after which the holes are drilled. This method answers nicely when one piece is to be drilled, and precise measurements need not be observed. If it is necessary to

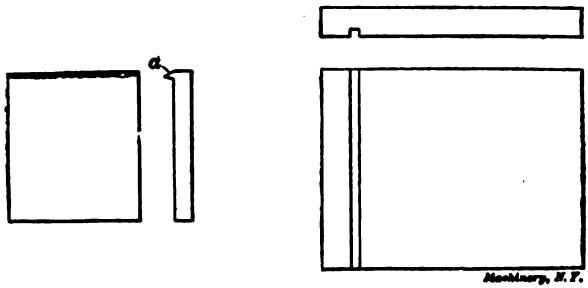

Figs. 1 and 2. Work with Burr, and Grooved Part of Jig to Correspond

drill ten thousand pieces, then this becomes a costly method, and the work can be done more cheaply if a jig is made to hold the pieces. The jig must, of course, have holes the size of the drill, which are properly located. By the use of the jig, the cost of drilling is but a fraction of what it would be if the holes were located by dividers, and the surface prick punched as described. As we have already said, the first factor which must be considered is the cost of the jig. If the cost of the jig, plus the cost of drilling, would exceed the cost if the pieces were first prick punched and drilled as formerly described, then the making of the jig would not be considered unless a greater degree of accuracy was necessary than would be liable to be the result of the method mentioned. When a jig is to become a permanent part of the equipment of a shop, its first cost is not so much a matter of consideration as when only a limited number of pieces are to be drilled. Yet no unnecessary expense should ever be allowed.

Means for Locating Work in Jigs

Many times when only two pieces are to be drilled which must be exactly alike as regards location of holes, it is cheaper to make a

simple jig than to attempt to drill them by any of the methods commonly used in machine shops. In such a case the jig may be made from a piece of cast iron or other material which may happen to be on hand, the holes being carefully laid off and drilled. This jig makes it possible to drill the holes in both pieces exactly alike as to location. When using a jig of this description it is possible to locate the holes near enough for most work by ordinary measurement. If many pieces

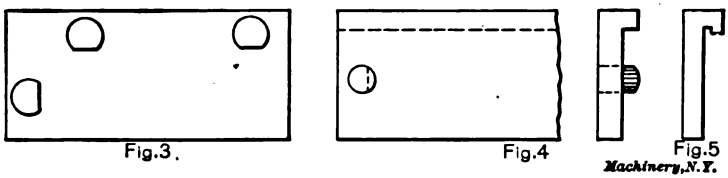

Figs. 3, 4 and 5. Means for Locating Work in Jigs

were to be drilled, it would be necessary to provide locating points, so that the pieces could be placed in the jig, and the essential surfaces brought against these. The means of locating may be pins, as shown in Fig. 3, or a shoulder and a pin, as in Fig. 4. If pins are used, they should be so located that the bearing surfaces may be worked flat, as shown, to prevent wear, and also to do away with a tendency to press into the surfaces of the work. If flat shoulders are used they should be cut away, or relieved, at corners, as shown in Fig. 5, to do away, so far as possible, with the liability of dirt or chips getting between them and the work. Then, again, if the working edges of the pieces of work are not exactly true, it would be impossible to properly locate by pressing them against true locating surfaces which extend the whole length.

When work is of irregular contour that could not be properly located by bringing it against two locating surfaces, it is possible to provide a locating device which bears against all the surfaces, as shown in Fig.

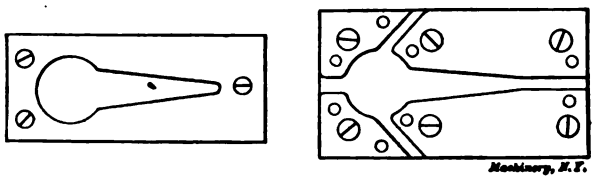

Fig. 6. Method of Locating Work in Jigs

6. This method, however, is hardly to be advocated for most work, as it necessitates exactness of measurement and shape on all the bearing surfaces, as well as on the pieces to be worked upon. Then, again, the shape makes it extremely difficult to clean, and a chip under any portion of the work will cause it to stand at an angle with the seating surface of the jig.

Clamping Devices

It is necessary to hold the work solidly in the jig without any chance of its changing its location. Should the location change after one or

more holes are drilled, and before all are drilled, it would cause a variation that would in all probability spoil the piece of work. When but a few pieces are to be drilled with a jig it is not generally considered advisable to make jigs with fastening devices, the wor.. being held in place with a clamp, as shown in Fig. 7. In order to do away with any possibility of change of location, a pin is forced through the jig hole and the hole in the work after drilling the first hole. If many holes are to be drilled in a piece it is advisable to have two pins. After drilling a hole in one end of the piece, force in a pin; then drill a hole in the opposite end, and place a pin in this hole, as shown in Fig. 8. The pins in opposite ends of the piece will prevent its slipping when the rest of the holes are drilled. Many different forms of fastening devices are provided, the design depending on the class of work. One of the most positive methods consists of a screw which passes through a stud or some elevation on the jig, and presses

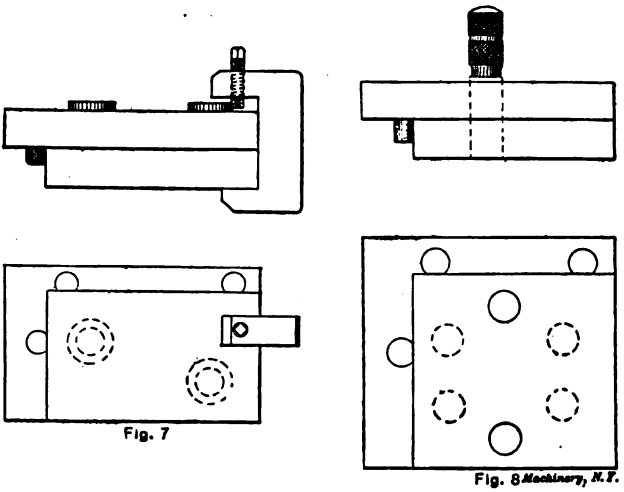

Figs. 7 and 8. Means for Holding Work in Drill Jigs

against the work, forcing it against the locating points, or stops, as they are called. The screw may have a knurled head, as shown in Fig. 9, or a thumb-screw may be used, Fig. 10. Sometimes it is necessary to exert greater pressure than can be applied by means of a screw of the ordinary form. Then, it is possible to make a screw with a round head, drill a hole through it, and through this hole pass a piece of wire as shown in Fig. 11. By this screw, sufficient pressure can be applied. When it is necessary to exert a greater amount of power than would be possible by the use of a pin of the length shown in Fig. 11, one may be used that will slide freely in a hole in the head of the screw. A ball placed on each end prevents its falling out. By getting the full length of the pin on one side of the screw-head, as shown in Fig. 12, a much greater amount of power is obtained. At times the stud which supports the screw may interfere with the plac-

ing of the work in, or the removal of the work from the jig, or it might be necessary to turn the screw for a considerable distance each time the work was placed in or taken out of the jig. In such cases a stud could be provided that could be removed from the jig when the screw was relieved of its tension against the piece of work. Such a stud is shown in Fig. 13.

Clamping Work by Cams or Eccentrics

A common method of fastening work is by means of a cam of suitable form. Cams of the ordinary design are not as powerful as the screw, but they have the advantage of being more quickly operated,

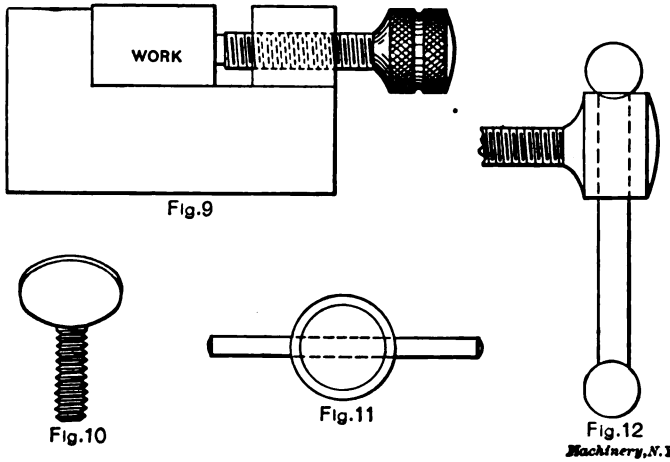

Figs. 9 to 12. Means for Clamping Work in Drill Jigs

and in the case of light work where but little strength is required, they answer the purpose much better. The designer should bear in mind that a few seconds' time saved on each piece of work amounts to a large saving in a day when a number of hundred pieces are placed in and taken out of a jig; and in these days of competition every means of saving time consistent with quality of work should be considered. When the work bears against two points—one on the side and one on the end—the cam should be designed so that its travel against the work will force it against both, rather than away from one. Fig. 14 shows a piece of work held by a cam which, by means of the handle, forces the work inward and in the direction of the arrow, thus holding it against the locating pins *a a* and the end stop *b*. In order to get as much pressure as possible with a cam, it is necessary to have the portion that bears against the work when it is against the locating surfaces nearly concentric with the screw hole. This being the case, it is obvious that the pieces must be very nearly of one size, while in the case of a screw binder any amount of variation may be taken care of. Thus it will be seen that a screw may be used where a cam would not answer. However, it is advisable to use a cam in prefer-

ence to a screw when possible, but at times the piece of work may be subjected to repeated jars which would tend to turn a cam, thus loosening the work. In such cases a screw is preferable. If a cam would be in the way when putting in or taking out work, it may be made removable, as shown in Fig. 15. At times a tapered piece of steel in the form of a wedge may be used to hold work, as shown in Fig. 16.

Simple Forms of Drill Jigs

When many pieces are to be drilled in a jig made in the simple form shown in Fig. 17, the drill wears the walls of the holes, enlarging

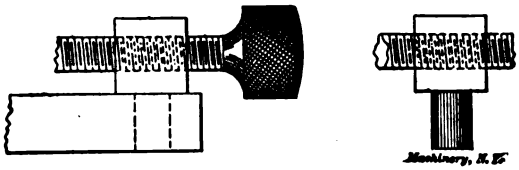

Fig. 13. Clamp Screw Mounted in Removable Stud

them sufficiently to render accuracy out of the question. Where jigs are to be used enough to cause this condition, the stock around the walls of the hole may be hardened, if the jig is made from a steel that will harden. If made from machinery steel, the stock may be case-hardened sufficiently to drill a large number of pieces without the

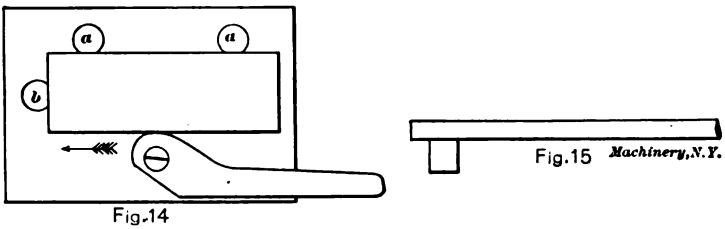

Figs. 14 and 15. Eccentric Clamp for Simple Drill Jigs

walls wearing appreciably. This, however, would not answer when accuracy is essential, as the process of hardening would have a tendency to change the location of the holes.

Guide Bushings

When the jig is to be used for permanent equipment, or where many holes are to be drilled, it is customary to provide bushings—guides—made of tool steel and hardened. These are ground to size after hardening, and being concentric, may be replaced, when worn, by new ones of the proper size. It is the common practice to make bushings for drill jigs on the same general lines as shown in Fig. 18, the upper end being rounded to allow the drill to enter the hole readily. A head is provided, resting on the surface of the jig; the portion that enters the hole in the jig is straight, and is ground to a size that insures its remaining securely in place when in use.

If the hole is sufficiently large to admit a grinding wheel, it is

ground to size after hardening. In such cases it is, of course, necessary to leave the hole a trifle small—0.004 inch—until it is ground. If the hole is not large enough to allow of grinding, or if there is no means at hand for internal grinding, the hole may be lapped to size by means of a copper lap, using emery or other abrasive material, mixed with oil. When the hole is to be lapped rather than ground,

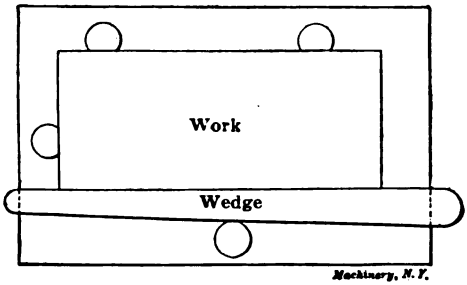

Fig. 16. Wedge Acting as Clamp in Drill Jig

leave a smaller amount of stock to be removed by the operation, say 0.001 inch or 0.0015 inch. After grinding or lapping the hole to size, place the bushing on a mandrel and grind the outside until it is a pressing fit in the hole. While on the mandrel, be sure to grind the

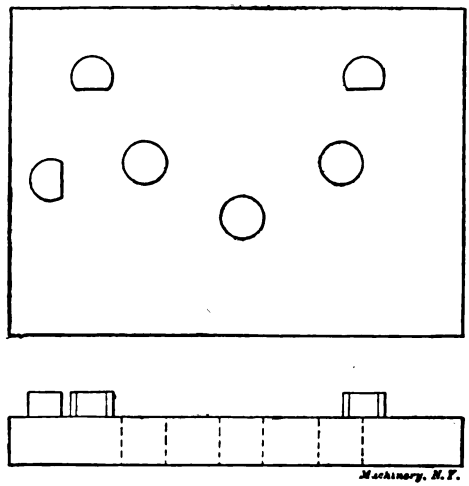

Fig. 17. Simple Form of Drill Jig without Bushings

under portion of the head, *a*, Fig. 18, to insure its being true with the body. Before starting to grind the outside of the bushing, test the mandrel for truth. This should be done *after* placing the bushing on it rather than before.

It is the custom in a few shops to make the outer portion of bushings tapered, as shown in Fig. 19. Unless there is a sufficient reason for so doing, this is to be avoided, as the operation of making a tapered

hole, unless it is bored on the taper with an inside turning tool, is not likely to produce a hole, the axis of which is at the desired angle to the surface of the jig. The outer portion of the bushing can easily be ground to the desired taper, but there is the liability of a particle

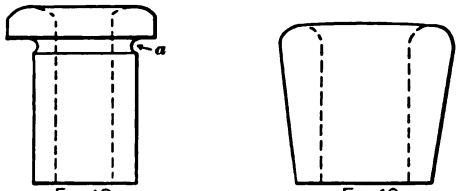

Figs. 18 and 19. Bushings for Drill Jigs

of dust getting in the hole when placing the bushing in the jig. A tapered bushing, in order to get the proper taper, necessarily costs a great deal more than a straight one, and cannot answer the purpose any better, and probably not as well.

Types of Drill Jigs

The shape and style of the jig must depend on the character of the work, the number of pieces to be drilled, and the degree of accuracy essential. It may be that a simple slab jig of the design shown in Fig. 20 will answer the purpose; if so, it would be folly to make a more expensive tool. If we are to drill a piece of work of the design shown to the left in Fig. 21, and but one hole is to be drilled in each piece, then a jig made in the form of an angle iron, as shown to the

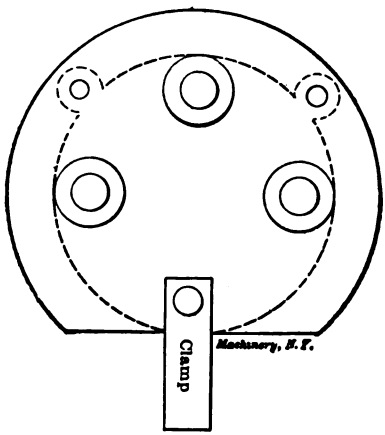

Fig. 20. Slab Jig of Simplest Design

right in Fig. 21, works nicely, and is cheaply made. As it is not necessary to move the jig around on the drill press table it may, after locating exactly, be securely fastened to the table. In designing such a jig, it is advisable, when possible, to have the work on the side

of the upright shown in Fig. 21, rather than on the opposite side, as that does away with any tendency of the jig to tip when pressure is applied in the operation of drilling.

Leaf Drill Jigs

For many kinds of work a jig provided with a leaf, as shown in Fig, 22, gives best results, as the leaf may be raised, and the work removed, and any dirt cleaned from the working surfaces. After placing the piece to be drilled in the jig, the leaf is closed. As the bushings are in the leaf, it is apparent that it must always occupy the same relative position to the work for the different pieces, or they will not be duplicates; consequently, the fulcrum pin, *a*, must be a perfect fit in the hole in the leaf, and a locating pin *b* is provided to prevent any tendency of the leaf to move from the action of the drill when cutting. Jigs provided with such a pin show less tendency to wear in the joint. The leaf should not close down onto the work, but

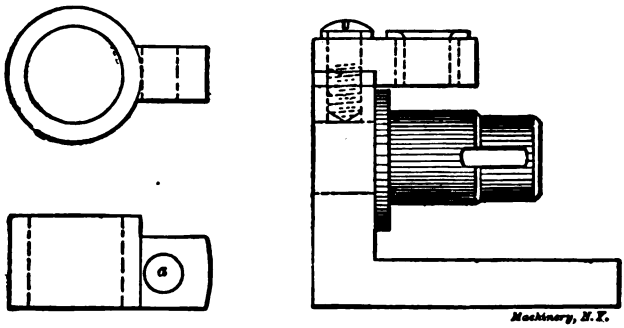

Fig. 21. Piece to be Drilled, and Jig Used for this Work

onto a shoulder on pin *b*, as shown, there being a space between the work and the jig leaf.

While the above is true for most work, a jig for drilling round pieces may be designed as shown in Fig. 23, the holding device being two V-shaped blocks, one located on the lower portion of the jig, while the other is on the leaf, as shown. In the case of a jig of this pattern, the work is securely held by binding the cylindrical piece by pressing the handles of the jig together.

Jigs Provided with Feet or Legs

When jigs are to be moved around on the table of the drill press, as is the case where several holes are to be drilled, feet or legs are generally provided, as shown in Fig. 22. In order that the legs may not wear, it is customary to harden them. The legs are hardened before they are placed in the jig, and are ground and lapped true while in the jig. As the only wear is on the ends, or where they come in contact with the drill press table, it is customary to harden only the ends which rest on the table. In most shops jig legs are made from tool steel, although a good grade of open-hearth steel containing sufficient carbon to insure its hardening answers as well for most purposes. But

as few shops carry such steel in stock, crucible tool steel is generally used. The ends of the legs should be ground true with the seating surface—that is, where the work rests—of the jig. To accomplish this a surface grinder should be used. As the operation of grinding leaves a number of projections on the surface ground, and as these ridges or projections would wear away as the legs were moved back and forth

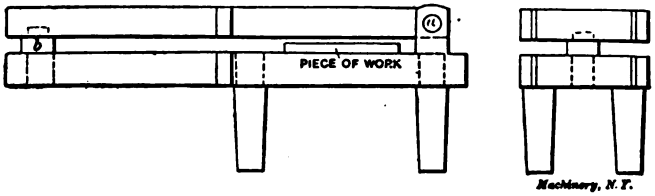

Fig. 22. Jig with Pivoted Leaf

on the drill press table, it is advisable to remove them by lapping on a flat lap, thus producing a perfectly smooth, true surface. In this way we reduce the wear to a minimum.

For certain classes of jigs the legs may be short, not more than ½ inch long; but for jigs of the style shown in Fig. 22, where the tool is held in the hand, it is necessary to make the legs longer to

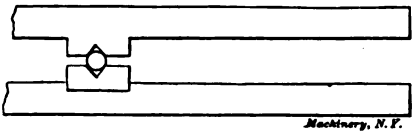

Fig. 23. Part of Jig with Pivoted Leaf, Showing Method of Holding Round Work

keep the fingers from coming in contact with the chips on the drill press table. The legs should be located so as to do away with any tendency of the jig to tip up when the work is being drilled.

Relation Between Accuracy of Jigs and Accuracy of Machines on which They are Used

While it is necessary to observe extreme care in designing drill jigs to prevent any tendency of the jig to tip, and to have the legs ground and lapped on a true plane, it is just as necessary that the drill press table should be perfectly at right angles to the spindle, and that it should be true and flat. Otherwise, the holes will not be at the desired angle with the working surface of the work.

In shops where interchangeable work is produced, or where the work must in all respects be machined correctly, the condition of the various machines is closely watched, and especially such parts of the machines as affect the accuracy of the finished product. Drill press tables are planed over when out of true, or are lined up to insure their being at right angles to the spindles of the drill press. This may be done by placing a bent wire in the drill chuck, the wire being bent so that it will describe as large a circle as possible, and yet be free to swing. The end of the wire is bent so that the point will come in

contact with the table. By loosening the screws holding the table, and inserting "shims," it may be trued as desired.

Locating the Holes for the Drill Bushings

When making jigs, the part of the work that calls for the best workmanship is locating the holes for the drill bushings. The methods employed differ, but should depend on the character of the work. Where accuracy is not essential, it is the custom many times to take a piece of work that is right, or, rather, one where the holes are drilled near enough right, place this in the jig and transfer the holes into the jig. As it is necessary to leave the bushing holes in the jig considerably larger than the holes in the work in order to have sufficient stock

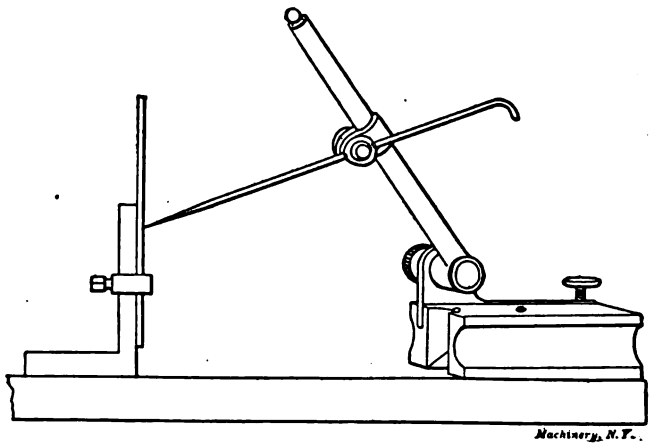

Fig. 24. Method of Taking Vertical Measurements

around the holes in the bushing, those in the jig may be enlarged by means of a counterbore, the pilot of which fits nicely in the transferred holes, and with a body the size of the desired hole. When this method does not insure desired accuracy, several other methods may be employed.

Making a Jig from a Sample Piece or Model

If a model of the work to be done is at hand, a jig, as shown in Fig. 22, may be made in the following way: The leaf is raised and the model put in place. The jig is fastened to the face-plate of the lathe, the leaf still being raised. By means of a center indicator the jig is located so that one hole of the model runs true; the leaf is then closed and the hole is drilled through it, and then bored with a boring tool to the desired size. Never ream a bushing hole in a jig, or any similar hole in any piece of work, where the finished hole must be exactly located, as a reamer is liable to run out somewhat and thus affect the accuracy of the work. A reamer, if properly made and used, will produce a round, true hole, accurate as to size, and is a valuable tool for many purposes, and holes of a uniform size may be produced. But on account of the stock being uneven in texture, or on account of

blow holes in castings, a reamer is liable to alter its course and so change the location of the hole. While for many purposes this slight alteration of location might be of no account, yet for work where accuracy is essential, it is out of the question.

After drilling and boring the first hole, the jig may be moved on the face-plate, and the other holes produced. It is obvious that in order to produce holes that will be at right angles to the base of the jig, the face-plate of the lathe must run true, and should be tested each time it is used for any work where accuracy must be observed.

Method of Locating Holes When Accuracy is not Essential

Where there is no model, and it is not considered advisable to make working models of the various parts, the location of the bushing holes may be obtained by laying out the various points on the jigs. In such cases a drawing is usually furnished, and the dimensions on same are transferred to the face of the jig. If it is not necessary to have the holes exact as to measurements, the laying out may be done with a surface gage, the point of the needle being set to a scale. The scale

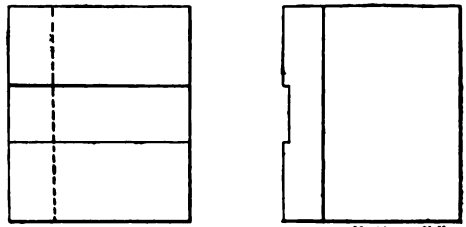

Fig. 25. Angle Iron with Groove for Scale

may be clamped against an angle iron, as shown in Fig. 24, or an angle iron may have a groove of the width of the scale cut across its face at right angles to the base, as shown in Fig. 25. The scale should be a good fit in the groove, so fitted that it will stay securely at any point from frictional contact with the sides of the slot, or a spring may be so arranged as to insure the proper tension.

Method Assuring a Fair Degree of Accuracy

Where greater accuracy is essential, the working points should be obtained by means of a height gage, as shown in Fig. 26. By means of such a tool the measurements may be fairly accurate, as the vernier scale allows of readings to one-thousandth inch. When the lines have been scribed at the proper locations they are prick punched. In order to prick punch exactly at the intersection of lines the operator must wear a powerful eye-glass, and use a carefully pointed punch, ground to an angle of 60 degrees. If the punch marks are made very light at first, the exact location may be observed nicely. The punch marks should not be deep, as there is a liability of alteration of location if the punch is struck with heavy blows. After the various points have been located and punched, the jig may be clamped to the face-plate of the lathe, and the bushing holes carefully drilled and bored to size.

At times jigs are made of such size and design that it seems wise to core the bushing holes. In such cases it is necessary, in order that we may lay out the location of the centers of desired holes, to press a piece of sheet steel or sheet brass into the cored hole, as shown in Fig. 27, and locate the center on this piece. When the holes are properly located for machining, the sheet metal may be removed and the holes finished to the desired size. If an error of 0.001 or 0.002 inch is not permissible, the method described above should not be employed.

Method Employed for Highest Degree of Accuracy

Where extreme accuracy is essential we must locate round pieces of steel on the face of our work. These pieces of steel are called buttons and are of exact size and perfectly round. To do away with any possibility of their becoming bruised in any way, they are hardened and carefully ground to size. The buttons are attached to the work by means of machine screws, as shown in Fig. 28, the holes in the buttons being larger than the screws used; this difference in size allows us to move the button until it is accurately located. The diameter of the buttons should be some standard size, exactly divisible by two, because, in making our computations we only consider the distance from the center of the button to its circumference, that is, the radius.

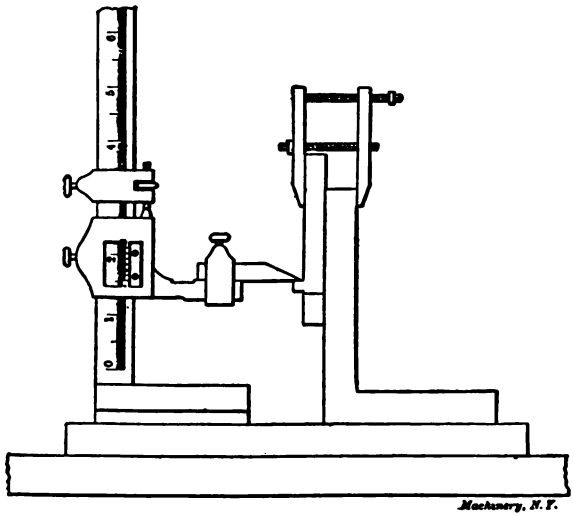

Fig. 26. Taking Vertical Measurements by Means of Height Gage

When we start to lay out the centers for the bushing holes we first determine our working surface, then lay out on the face of the jig, by means of a surface gage, as described in a previous operation, the centers of the holes to be produced. We then drill and tap screw holes to receive the screws to be used in holding the buttons to the jig. When we have prick punched the surface, and before drilling the holes, we scribe by means of dividers a circle the size of the button on

the face of the jig with the punch mark as center. This enables us to approximately locate the button. If the hole to be produced has its center 2 inches from the base *a* and 4 inches from vertical side *b*, Fig. 29, we would locate the button—provided it was ½ inch diameter—1¾ inches from *a*, and 3¾ inches from *b*. This can be done accurately by the use of a vernier caliper, or we can lay the jig on the side *b*, and by means of a length gage, or a piece of wire filed to the right length, accurately determine the distance from *b* to the button. The jig is then placed on the base *a* and the other dimension obtained in the same manner. The buttons may be located more easily by the use of a vernier height gage, if one is at hand.

If there are to be several bushings on the face of a jig, a button may be accurately located where each hole is to be. The jig may be clamped to the face-plate of the lathe so that one button is located to run exactly true. This is done by means of a lathe indicator. When

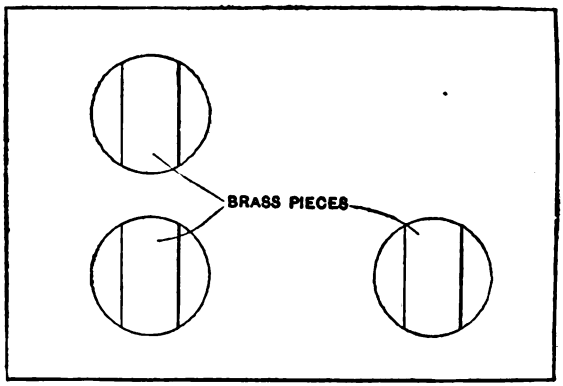

Fig. 27. Cored Holes with Inserted Brass Pieces for Centers

the jig has been so located that the button runs perfectly true, the button may be removed and the hole enlarged by means of a drill, so that a boring tool can be used to bore it to the proper diameter.

Locating the Holes on the Milling Machine

In some shops it is not considered advisable to locate a button at the desired position of each bushing hole. One button is located and the jig is fastened to the table of a milling machine having a corrected screw for each adjustment. Then, after one hole is accurately located and bored, it is a comparatively easy matter, by means of the graduated dials, to obtain the other locations; however, this method should never be used unless the machine has all its movements governed by "corrected" screws, as the screws ordinarily sent out on milling machines are not correct as to pitch, and if used, serious defects in measurements will result. Many tool-makers, therefore, prefer using a vernier scale and vernier attached to the knee and table of the milling machine, for accurate work, as they are then independent of the inaccuracies that may be present in the feed-screw.

Fig. 30 shows a jig clamped to an angle iron on the table of the milling machine. The angle iron is located exactly in line with the travel of the table, and the jig fastened to it. The button *D*, which has previously been accurately located, serves as a starting point, and the jig must be located so that the button is exactly in line with the spindle of the machine. This is accomplished by moving the table

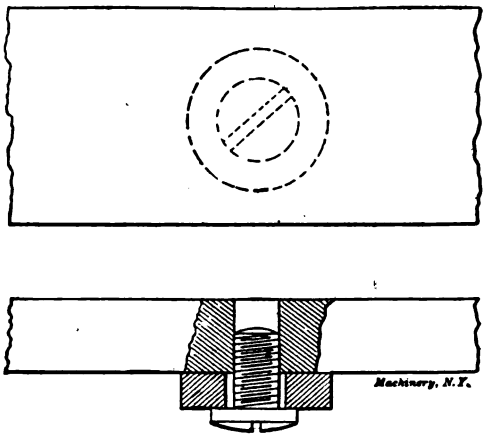

Fig. 28. Buttons for Locating Holes in Jigs

until the sleeve *A* on the arbor *B* will just slide over the button *D*. The hole in *A* must be a nice sliding fit on the arbor *B* and also on the button *D*. In order to insure accuracy, the arbor *B* must be turned to size in the spindle just as it is to be used; or, if a portable grinder is at hand, the arbor may be fitted to the spindle hole or to the collet, as the case may be; the portion which receives the sleeve *A* may be

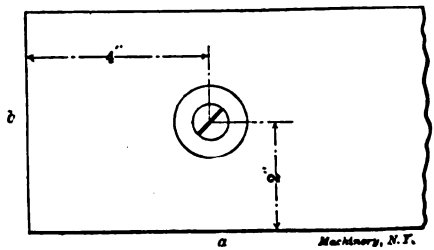

Fig. 29. Locating a Hole by Means of a Button

left a trifle large, and may be ground to size in place on the machine. The portable grinder is located on the table of the machine.

After the jig has been accurately located so that the button *D* allows the sleeve *A* to slide over it, the arbor *B* may be removed from the spindle, and a drill be employed to increase the size of the tapped screw hole that received the screw used in fastening the button. Best results follow if a straight-fluted drill, as shown in Fig. 31, is used. The drill should not project from the chuck or collet any further than necessary,

thus insuring the greatest rigidity possible. After drilling, a boring tool of the form shown in Fig. 32 may be substituted for the drill, and the hole bored to size. The machine may now be moved to position for the next bushing hole by observing the dimensions given. The operator should bear in mind that the screw used in getting the spac-

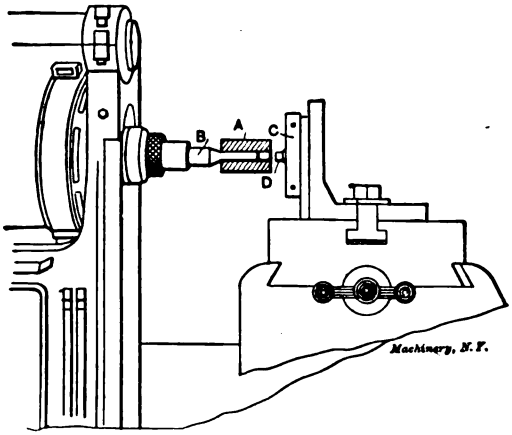

Fig. 30. Locating Holes in the Milling Machine

ings must be turned in the same direction at all times, otherwise the backlash will render accuracy out of the question.

While the foregoing relates to plain jigs, the same principles apply to those of more complicated design. In the next chapter attention

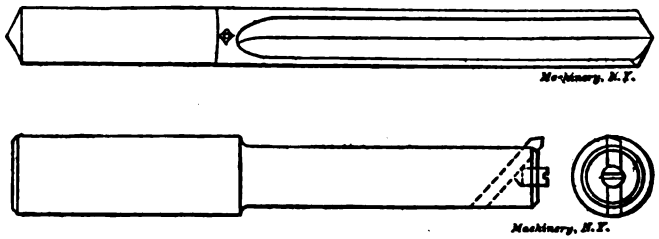

Figs. 31 and 32. Straight-Fluted Drill and Inserted Cutter Boring Tool

is given to a different and original method of locating the holes in jigs, using the drill press for this work exclusively, and Chapter III is devoted to examples of actual designs of drill jigs, showing how the elementary principles outlined above are employed in the practice of the machine shop.

CHAPTER II

DRILLING JIG PLATES*

A description of the following method of drilling jig plates was contributed to the columns of MACHINERY, October, 1902, by Mr. J. R. Gordon. The method being radically different from any of those in common use, it has been deemed proper to mention this method in connection with other methods for locating the holes in jigs already referred to.

In the case in question, a great many jigs were to be made, and the positions of the drill bushings were to be accurate within 0.001 inch. The procedure was as follows: The regular work-table from an ordinary sensitive drill press of the usual pattern was removed, and substituted by one of larger dimensions, as this was called for by the size of the jig plates to be made.

This table was first planed on the face and edges, and the stem, by which it is held in the bracket on the column of the press, was turned to fit snugly the hole in the bracket. After planing and turning the table, a series of holes was drilled, as shown in Fig. 34, and they were tapped to receive a No. 14-20 screw. Two parallel pieces *C* and *D*, Fig. 34, having straight edges and a thickness of $\frac{3}{8}$ of an inch, were made. These may be clamped to the table in such a position as may be desired or the work determine, the series of holes permitting any adjustment within the range of the table. In order to make more room between the spindle and the column of the drill press, the spindle head was blocked out, the block having a projecting lug, as shown at *A*, Fig. 33, to which a bracket, *F*, was fastened to carry the bushing, *B*. This bushing is fastened by a screw and can readily be removed and others inserted, having various sizes of holes, if found desirable. These preparations were all that were necessary with the exception of the gages that will be described in the operation of the method for spacing, which is as follows:

The plate to be drilled had a number of holes spaced as shown in Fig. 34, and before drilling them they were marked as Nos. 1, 2, 3, etc., No. 1, as will be seen, being the upper left-hand hole. Its location with reference to either end or sides of the plates did not require to be very exact; but other plates may need to have holes placed at some definite distance from the edges or ends, so it may be assumed that the distance is 6 inches from the edge, *G*, and 8 inches from the end, *H*.

With these distances given, make two gages, using vernier or micrometer calipers for standard, and make them $6\frac{1}{4}$ and $8\frac{1}{4}$ inches long, respectively. Remove the bushing, *B*, Fig. 33, and in its place insert a plug having a diameter of $\frac{1}{4}$ inch.

* MACHINERY, October, 1902.

Resting the 6⅛ gage on the table, and with one end touching the plug, the parallel piece, *C*, Fig. 34, is brought to just touch the other end of the gage and is then clamped to the table. This is not very difficult if one end of the parallel is left free and the other end is clamped tight enough to permit the free end to move somewhat stiffly. After locating and clamping the parallel, *C*, the other parallel

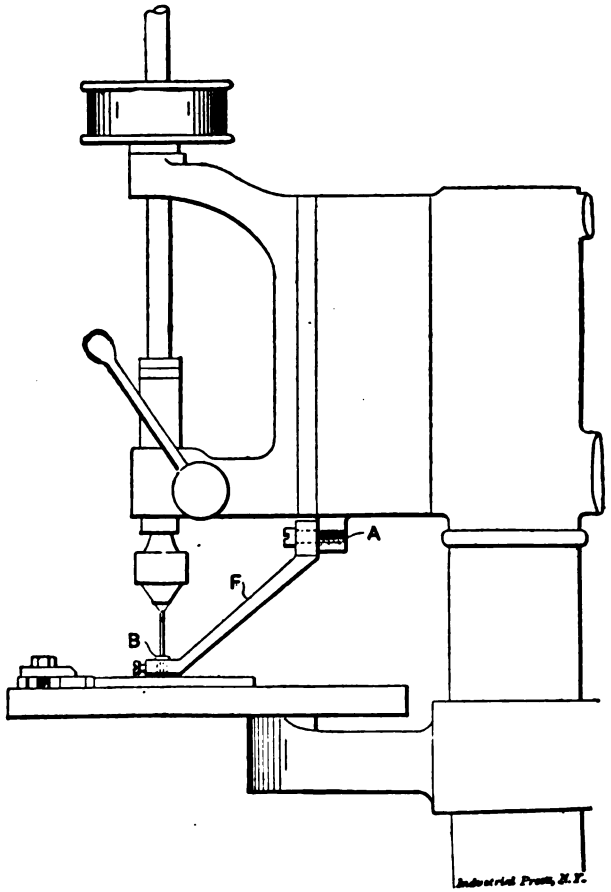

Fig. 33. Drill Press arranged for Drilling Jig Plates

is clamped in position, but it must be placed square with the first parallel. This is more difficult than in the first case, but is not at all difficult if one man can be employed to clamp the piece while another holds the square and gage. The reason for making the gages 6⅛ and 8⅛ inches long instead of 5⅞ and 7⅞ inches, respectively, is that it is not desirable to have the edges of the plate touch against the parallels, as chips could get between the two and destroy the accuracy of the measurements; allow the gage to be ¼ inch longer than the distance

required, and fill in the space with ¼ inch diameter gages, as shown in Fig. 34.

For gages over 1 inch in length use flat brass rods or strips about ⅝ inch wide and ⅛ inch thick, and cut them a little longer than the

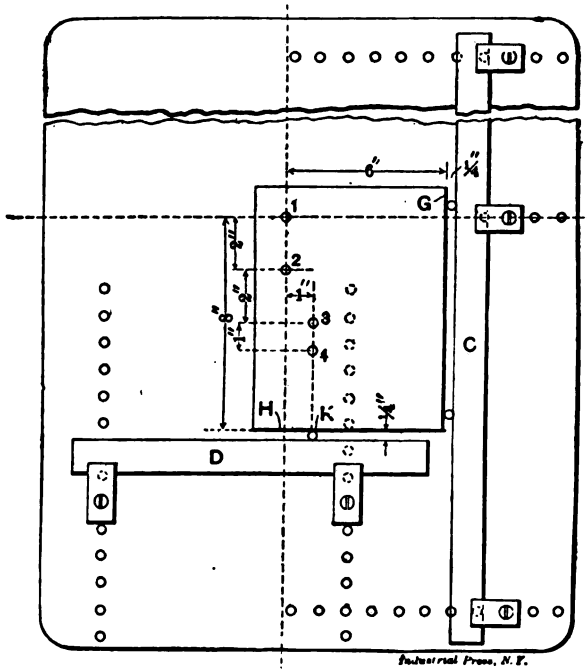

Fig. 34. Plate in Position for Drilling First Hole

finished length. One end is finished square and the other end is rounded as shown in Fig. 35. In making the gage, if too much metal is removed, it is an easy matter to pene the stock out to make up for any reasonable error. The length of the gage is stamped on it, and when the operation is completed it is put away for future use.

Having located the parallels, the plug is removed from the bracket

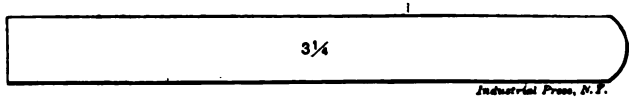

Fig. 35. Type of Gage used when Drilling Jig Plates

and the bushing replaced. The drill should, of course, fit as snugly to the hole in the bushing as it can and run without cutting. The bushing should support the drill to within a distance equal to the diameter of the drill from the plate to be drilled, and care should be taken not to drill through the plate until all the holes have been started. After drilling the first hole, to place the plate for the second hole, distant 2 inches from the first, it is moved along the parallel, *C*,

and a gage 2¼ inches long placed as shown in Fig. 36, and when so placed is ready for drilling. The third hole requires three new gages, since it is 1 inch off the line of the other two holes, as shown in Fig. 37.

For holes which are to be finished 3/16 inch to ¾ inch in diameter, use first a small drill, size No. 52 to No. 30. After the holes are all drilled to this size, then enlarge them, by the use of a series of four lip counterbores, to the required size. Where extreme accuracy is required, in the place of the counterbore, a small boring bar may be substituted and the holes bored to the size desired. One disadvantage of using a boring tool is that it requires a hole in the table equal to the largest hole to be bored out, or that the plate shall be kept clear of the table by blocking up with parallel strips under it.

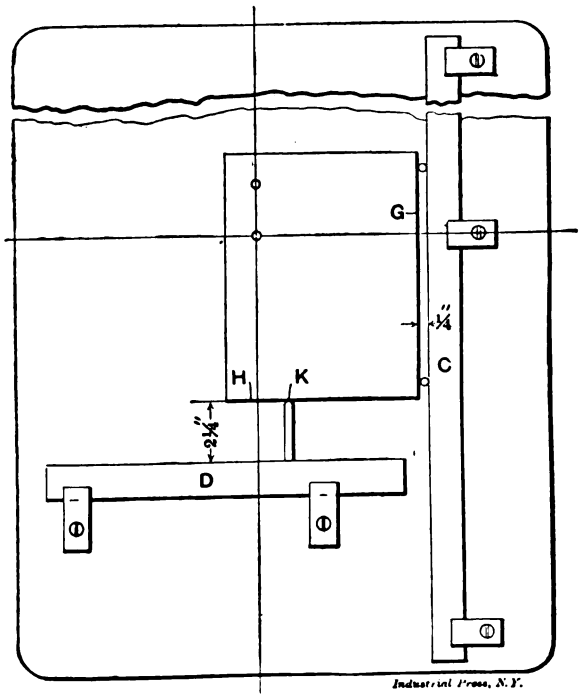

Fig. 36. Plate in Position for Drilling Second Hole

Fig. 38 shows a form of boring tool which will be found very convenient for use on this kind of work. It consists of the shank, *A*, which is fitted to the taper hole in the spindle, and a split holder, *B*, which is pivoted to the shank at *C*, and is locked to it at *D*, the screw at *D* serving to clamp the boring tool, *E*, at one end, while *F* clamps it at the other end. Adjustment is obtained by swinging the holder, the radial slot, *G*, allowing it to have quite a range, and the top screw, *H*, permitting fine adjustment. Split bushings in the holder will allow the use of boring tools of smaller diameter if desired.

This method of locating holes is not limited to the drill press, but may be employed to advantage on the face-plate of a lathe. In this case, the work, as soon as located by the gages, is clamped to the face-plate.

While this method was originated for drilling holes in jig plates, it may be used with equal success for drilling small interchangeable pieces. It is not necessary that the edges, *G* and *H*, be planed at right angles, as the same results will be obtained if the surface, *G*, is planed true and a finished spot provided at *K*, from which point all measurements to the parallel, *D*, are made.

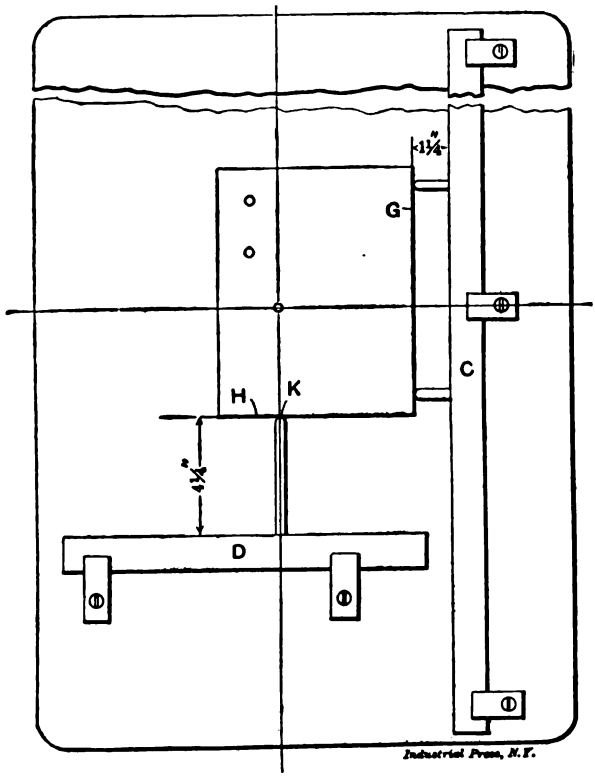

Fig. 37. Plate in Position for Drilling Third Hole

Mr. Gordon claims that this system has certain advantages over the button methods used on the milling machine. In the first place, the feed-screws on nearly all milling machines are not correct, and in some shops the tool equipment is so badly worn as to make the use of the feed-screws out of the question for accurate work.* However accurate a screw on a milling machine is when new, it soon loses its truth under ordinary conditions of machine shop practice, since only a small

* See page 18: Locating the Holes on the Milling Machine.

portion of the screw is used to do most of the work of driving the table. In the second place, Mr. Gordon claims that his method is quicker, the supposition being that the necessary appliances, such as parallels, brackets, bushings, etc., are made and ready for use; and finally, that there is a very small chance for errors, provided that the gages used are marked distinctly.

These assertions, however, called forth considerable comment in the columns of MACHINERY. Mr. Frank E. Shailor, in particular, took issue with Mr. Gordon on account of these assertions and claimed that there were considerable chances for errors. Mr Gordon, however, defended

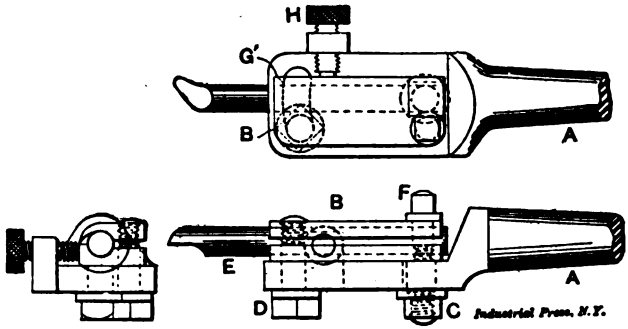

Fig. 38. Boring Tool

his method, pointing out that most of Mr. Shailor's objections were of little consequence, provided proper precautions were taken. Other contributors added their word to the discussion, some siding with Mr. Gordon, and some admitting that the methods used both by Mr. Gordon and Mr. Shailor would, under proper circumstances, be correct to use. It is not possible in this treatise to give place to what was more a personal controversy, than of direct bearing upon the subject of drill jig design. It may, however, be proper to mention that the discussions on this subject appeared in the July, August, September and November, 1904, and the January and February, 1905. issues of MACHINERY.

CHAPTER III

EXAMPLES OF DRILL JIGS

In the following will be given a number of examples of drill jig designs for definite purposes, as employed in various shops in the country. No attempt has been made to show only jigs of which it can be said that the design is perfect or nearly so, but examples have been taken which indicate general practice, and attention has been called to wherein these jigs conform to the principles of drill jigs as treated in Chapter I, and also to the objections that might be raised against each particular design, if such objections have been considered in

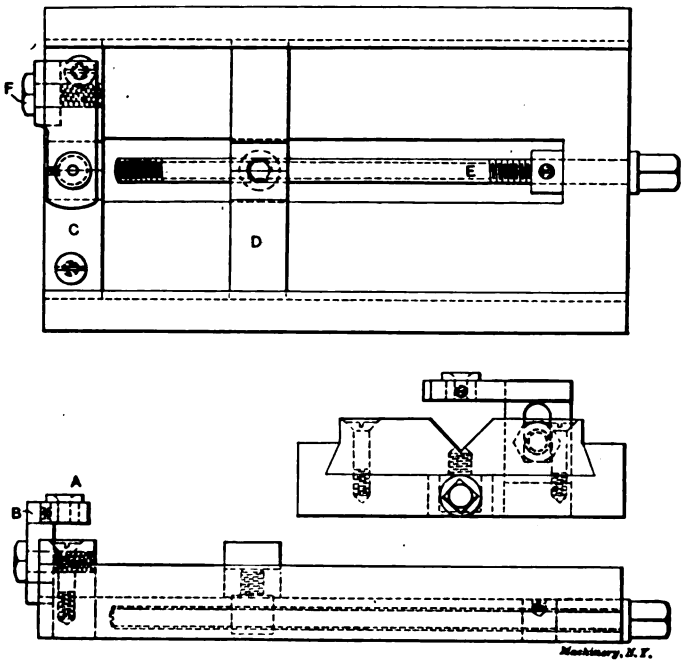

Fig. 39. Jig for Drilling Holes in Studs and Shafts

place. The names of the persons who originally contributed to the columns of MACHINERY the descriptions of the devices shown, have been given in notes at the foot of the pages, together with the month and year when their contribution appeared.

Jigs for Drilling Pin Holes in Shafts

Usually, the simplest kinds of jigs are those intended for drilling a hole through the center of a shaft. They often consist only of a

V-block, in which the work rests, and a cover of the simplest design, containing the guide bushing. Sometimes, however, they are made more universal; the cuts Figs. 39 and 40 show two such designs.

The jig in Fig. 39 is intended for drilling pin holes in comparatively short studs, and will handle a variety of such work with great rapidity. The drill bushing *A* can be removed and bushings with different size holes inserted. The bushing holder *B* can be raised or lowered to suit different diameters of work. The V-block *C* is fixed, while block *D* is adjustable by means of the screw *E* for different lengths of studs. By fastening a strap to the device by screw *F*, and providing this strap with an adjustable screw in line with the V's, studs can be gaged from the end instead of from the shoulder, which, when used for gaging, rests against the sides of either of the V-blocks. The manner in which this jig is used lends itself well to a variety of work of all descriptions.*

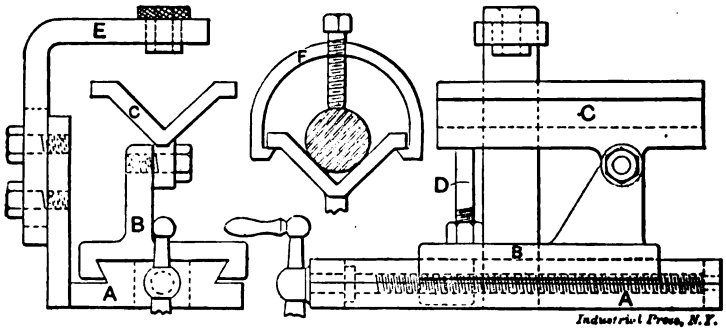

Fig. 40. Jig for Drilling Holes in Shafts

This jig is a simple, yet efficient and characteristic, example of the adjustable type of jig. It will be noticed that the design does not provide for any clamping device for the work to be drilled; this is on account of that in this case the holes to be drilled are so small, compared with the diameter of the shaft or stud, that the stud will stay in place by its own weight, or by pressure of the hand on its upper side, the V-groove aiding materially in keeping the work in position.

The device shown in Fig. 40 is another example of an adjustable jig for this class of drilling. This tool has proved to be of the greatest convenience for drilling shafts, spindles or other round pieces. The base *A* is dovetailed and fitted with a lead-screw, which moves the slide *B* in and out. Upon this slide is mounted the adjustable V-block *C*, which can be tipped at any desired angle for oblique drilling, or set perpendicularly to hold the shafts in position for end drilling. The adjustable stud *D* is placed under the outer end of the block to hold it firmly in any set position. The arm *E* is adjustable up and down, for different sized shafts, and is supplied with a complete set of bushings for use with drills of different diameters. When mortising bars, intended to be used as holders for facers, boring cutters, counterbores

* Paul W. Abbott, August, 1907.

with interchangeable blades, etc., the work is clamped into the V with the clamp *F*, and then, after the first hole has been drilled, the slide is moved along for a distance equal to the diameter of the drill, and the next hole drilled, and so on. By this method any number of holes can be drilled in perfect line, and always through the center of the bar. By the use of a stop clamped across the end of the V-block, the attachment forms a jig which can be used for a great variety of duplicate drilling.*

A jig for drilling cotter-pin holes, which facilitates the operation considerably as compared with the way it is commonly done, is shown in Fig. 41. It consists of two pieces of steel forming a clamp, each piece having a V-groove to receive different diameters of studs. The

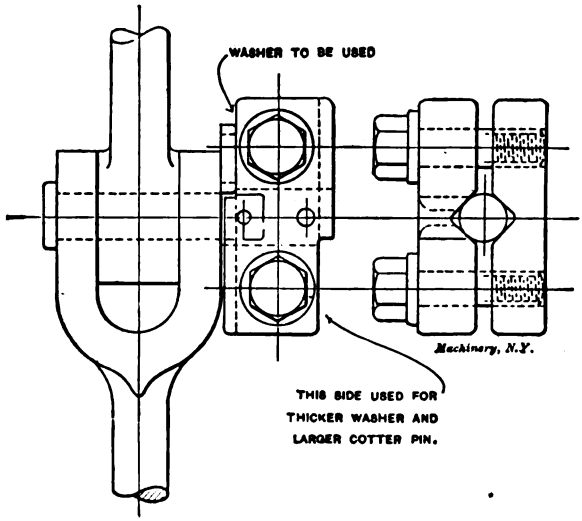

Fig. 41. Jig for Drilling Cotter-pin Holes

upper one contains two holes which correspond with the size of cotter-pins desired. Should more than the two sizes be required, extra top pieces can be used with the same bottom piece. Part of the upper piece is cut away on each side in line with the edge of the holes, which allows the washer to be used to be inserted at the recess, and the jig then clamped in position. By this means no scribing or spotting is necessary and a much better job can be done. Although it is shown so in the cut, it is obvious that the male portion of the joint need not be in position when drilling.

Jigs for Drilling Collars

The jig shown in Fig. 42 has been used with much satisfaction for drilling set-screw holes in collars. The collar *C* is held in position by means of the three locating pins *D*, *D*, *D*, and the swinging clamp *E*. In order to place a collar in position for drilling, the strap is swung

* Roy W. Harris, April, 1903.

to one side about the hand screw *G*. When the collar has been put in place the clamp is swung back, and in doing so, its motion is limited by the pin *F*, which brings it to a stop directly over the collar. At the top of the jig is a bushing *B* through which the drill is guided. When the outside diameter of the collars is likely to vary, the pins *D*, *D*, *D*, may be replaced by a central pin, *L*, as shown in the separate view in the cut, and the collar held on this while it is being drilled.*

The jig shown in Fig. 43 is designed for drilling the holes in the center of collars, and the method of drilling, described below, also suggests the value of systematizing the work in using jigs. The collars to be drilled are made of annealed tool steel in sizes varying in thickness as well as in diameter and size of hole, and are cut off from the

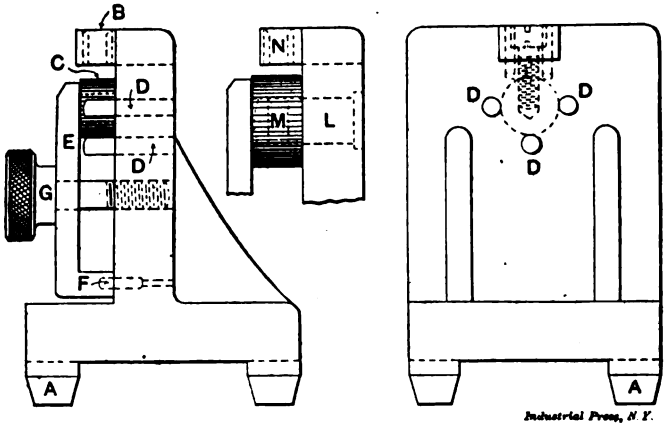

Fig. 42. Jig for Drilling Set-screw Holes in Collars

bar on the cold saw. There being a three-spindle gang drill in the shop, which was idle part of the time, it was decided to make use of it in the production of these collars. Four jigs like the one shown in the cut were made. They were made to take any diameter or thickness of collars within their range. The body of the jig is a square block of steel, with the hole to receive the collars exactly in the center. The lower end is threaded left-hand to receive the piece *B*, which has a square hole in the center to receive the wrench *C*. The ring *D* is bored taper, and fits the collar operated upon at the top end only, so that the collars will drop out of the jig easily. Different rings are made to fit collars of different diameters, and are just an easy drive fit in *A*, the body of the jig. They are driven out with a soft punch through hole *E* in piece *A*. Drill bushings *F* are also interchangeable. Piece *G* is a distance piece used when drilling thin collars in order to avoid screwing piece *B* into the jig too far. It is apparent from the cut that these pieces are made to fit the collar at one end, and beveled at the other to center in piece *B*. The reason piece *B* is threaded left-hand is as follows: If the collar operated upon should turn in

* C. H. Rowe, January, 1903.

the jig, the piece *B*, taking the thrust, would also turn, and being threaded left-hand would thereby tighten the collar in the jig. Piece *H* is a channel iron the function of which is to hold the jigs while refilling. In operation, one of the jigs is placed upon the drill press table under each spindle between flat strips *I*, which keep the jigs from turning, at the same time leaving them free to be removed for refilling. It will be seen that by having four jigs, and a three-spindle machine, by timing them so that they will finish the holes one after the other, it will give plenty of time to refill the fourth jig, and thereby, with an extra drill or two kept sharpened by the tool grinder, the

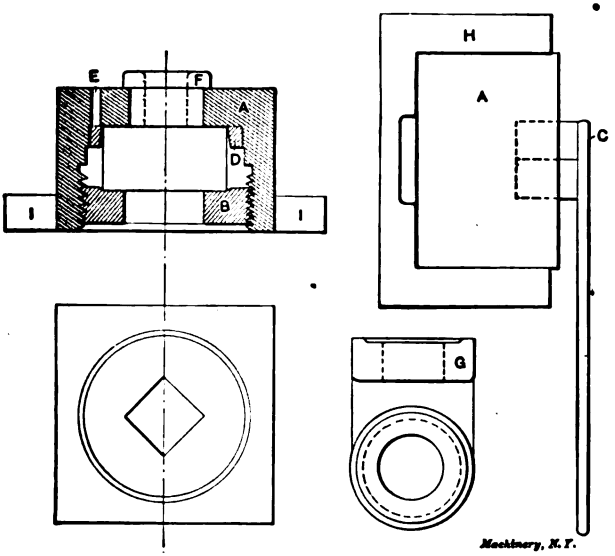

Fig. 43. Jig for Drilling Collars

machine may be kept in constant operation. This machine is equipped with a pump keeping a constant flow of cutting fluid on the drills. As this machine is also handled by comparatively cheap labor, a saving of almost 75 per cent was shown by actual test over methods previously employed in producing these collars on a turret lathe.

If it were not possible to use four jigs at a time of the kind just described, three being in operation, while one is in the hands of the operator for removing the drilled piece and inserting a new one, there would be one serious objection to the design of the jig shown. The time required for unscrewing, and again tightening, the clamping collar *B*, being threaded for its full length into body *A*, would be too long to permit rapid work. Therefore, in a case where but one jig could be used, the clamping device should be arranged so that the drilled piece can be removed, and a new one clamped in place instantly. This can be accomplished by some kind of a hinged or swinging cover, provided with a threaded binder; one half turn of the binder would be sufficient to clamp the work. In the case in hand, however, the sys-

tem of using the jigs makes this objection of less consequence, as the operator has plenty of time to attend to one jig while the collars in the others are being drilled.

Flange Drilling Jigs

Two examples of flange drill jigs are given in Figs. 44 and 45. The jig in Fig. 44 is of the simplest form for this kind of work, being merely a templet, while Fig. 45 shows the appearance and application of a more universal device, provided with an indexing plate. In cases where flanges and fittings are to be interchangeable, or to be duplicated at different times, the only accurate method of drilling such fittings is, of course, by means of a jig or templet which prevents any error arising when such parts are duplicated.

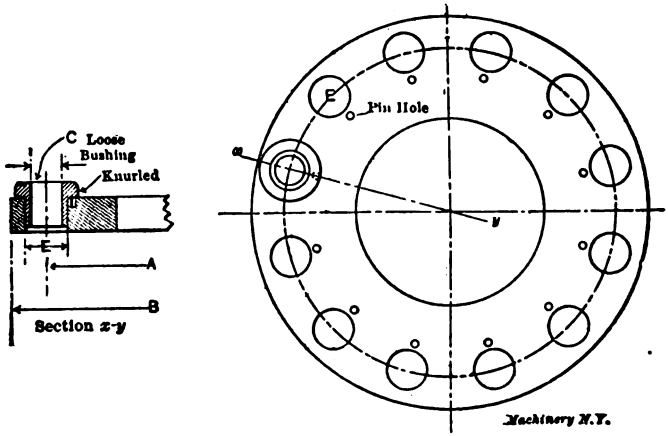

Fig. 44. Templet Jig for Drilling Flanges

The templet, Fig. 44, combines simplicity and cheapness. The ring proper may be made from a companion flange, the size for which the templet is to be used, by cutting off the head and finishing all over, the thickness being approximately one inch. Diameter *B* is made equal to the outside diameter of the flange, and *A* is the diameter of the bolt circle. A removable bushing, such as shown in section *x-y*, is used and moved from hole to hole as required. The advantage of this loose bushing over a stationary one in each hole is obvious, lessening the cost of the templet more than one-half. The bushing is made from machine steel, knurled where indicated, and hardened. The small pin prevents the bushing from revolving in its hole with the drill. In such cases where a drilling job calls for the same number of bolts in the same bolt circle, but different sizes of bolts, all that is necessary is to have two bushings, with the same diameter *E*, while *C* is made to correspond with the diameter of holes required.*

In Fig. 45 an adjustable type of jig and the work for which it is used are shown. As the number of holes in the work to be drilled, as

* Calvin B. Ross, May, 1906.

well as the diameter, varies, it would cost considerable to make individual jigs to do the work. The features of this jig are a small center plate, provided with holes for indexing, as shown at the center of the cut, and a removable arm which carries the drill bushing. The index plate is held in position by a nut on the under side of the work, and the position of the arm is fixed by a plug or pin which passes through the arm and into the plate. The bolt at the outer end of the arm is made of a suitable form to clamp on the under side of the work, and is tightened by the handle shown, which avoids the use of a wrench.

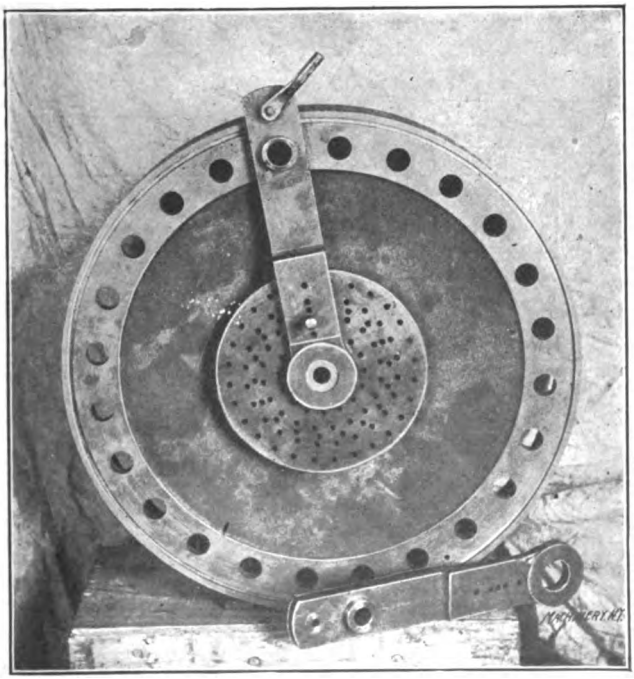

Fig. 45. Adjustable Flange Drilling Jig

By loosening this handle and withdrawing the locating plug, the arm can be turned to the next division, the plug inserted and the hole drilled. Different diameters may be drilled by using arms of suitable length, the same dividing plate answering for a wide range of sizes.*

Jigs of the description shown in the cuts, Figs. 44 and 45, are, of course, not intended for extreme accuracy, but rather for combining the objects of rapid production of work within commercial limits of accuracy, cheapness of tools, and possibility of accommodating a wide range of work with the same devices.

Adjustable Jigs

It is not always possible to provide jigs with adjustable features, particularly not when a great degree of accuracy is required. A great

* M. A. Palmer, June, 1907.

many operations in the shop, however, permit of so wide a limit of error that fairly accurate jigs can be designed which, having a certain degree of flexibility, will accommodate a variety of work. These jigs are valuable in a double measure. In the first place they save a great deal of outlay for individual jigs, and, secondly, many a little job, for which no individual jig would be warranted, may be drilled in an adjustable jig at a great saving of time and gain in accuracy.

The jig shown in Fig. 46, in use in the W. F. & John Barnes shops, Rockford, Ill., is designed with the purpose of securing adjustability, so as to adapt the jig to pieces of different shapes and dimensions. The base piece *A* supports an upright *F*, to which the knee, *E*, is bolted. This knee holds the drill bushing and is tongued and grooved to the

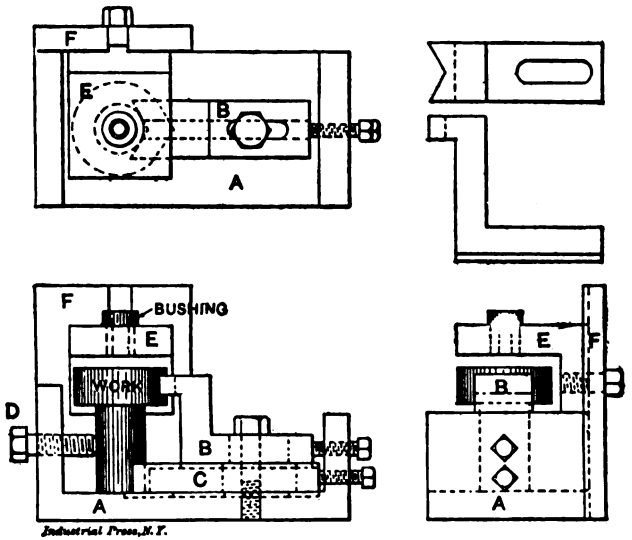

Fig. 46. Adjustable Drill Jig

upright so that it may be raised or lowered for work of different heights. The work is held by two slides, *B* and *C*, and a set-screw *D*. The lower slide, *C*, has a tongue fitting in a groove in the base, and one end is V-shaped to give support to the lower end of the work, against which it is made to bear. The slide *B* has a tongue fitting in a groove in the top of the lower slide, and may thus be adjusted independently of the latter.

An adjustable jig also provided with an indexing feature, is shown in Fig. 47. This jig is intended for drilling the clearance holes in small threading dies. As these holes are located on different distances from the center according to the diameter of the thread the die is intended to cut, one jig would be necessary for each diameter of thread in the die, although the outside dimensions of the die blanks are the same for wide ranges of diameters of thread. To overcome the necessity of so many individual jigs, an adjustable strap or slide *C* is pro-

vided, which can be adjusted to drill holes at different radii from the center of the blank, and will locate the center hole in the blank when a mark on the slide coincides with the "center line" graduation on the holder plate. The die blank is placed in holder *B*, being secured therein by the set-screws located as shown. This holder is readily rotated, as it is knurled on the edge of the flanges. It has four equally spaced locating holes, into which locating pin *D* enters.*

Miscellaneous Examples of Drill Jigs

A type of drilling jig containing features that merit the attention of the jig designer is shown in Fig. 49. One often sees expensive and complicated jigs used where one of this type would have done as well. In some shops this type has reached a high state of development, due

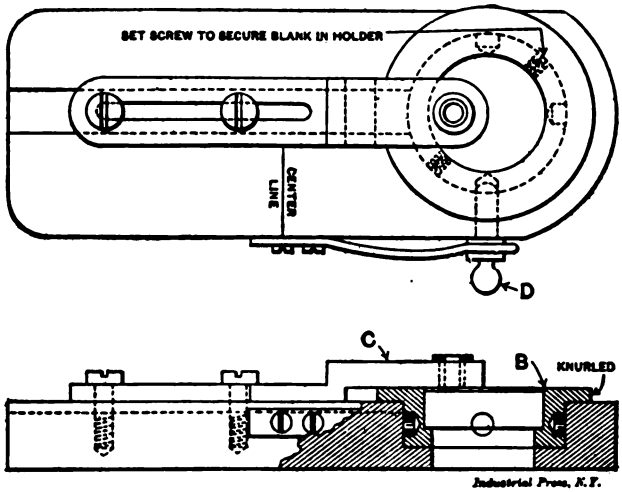

Fig. 47. Adjustable Jig for Drilling Threading Dies

to conditions that favor the adoption of a cheap and quickly made jig, namely: A constantly changing product, few pieces to be drilled of each kind, and the fact that the jigs are always wanted in a hurry. In designing jigs under these conditions, the problem resolves itself into building a cheap jig, and not accumulating a large number of useless patterns.

Fig. 48 shows the piece to be drilled and detail of clamp and feet. The plan and side views of the jig, with the work in position, are shown in Fig. 49, in which cut the jig is shown bottom side up. A cast-iron plate A is used, in which the required number of holes are drilled for the insertion of hardened bushings, and there are two locating pins, shown in the plan view at *b b*. *C* is a locating and clamping plate which is kept central by the four pins *d*. The V in the clamping plate locates the work in a central position, and as the plate also

* I. B. Niemand, February, 1902.

extends over the top of the work and clamps down upon it, it holds the work securely in place. The clamp is bolted to the plate by the screw *h*, and the work is clamped by screw *g* at the other end. Four

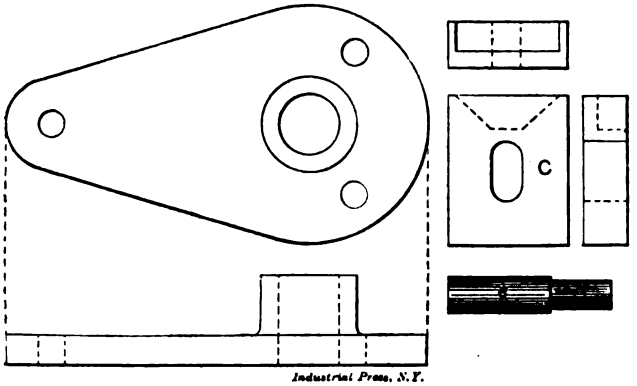

Fig. 48. Piece to be Drilled in Jig, Fig. 49, and Detail of Clamp and Feet

legs *c* support the body plate *A*, and raise it up high enough so that the work clears the table when the jig is placed in position for drilling. The oblong hole in the plate *C* permits the clamp to be moved back far enough to get the work in and out of the jig.

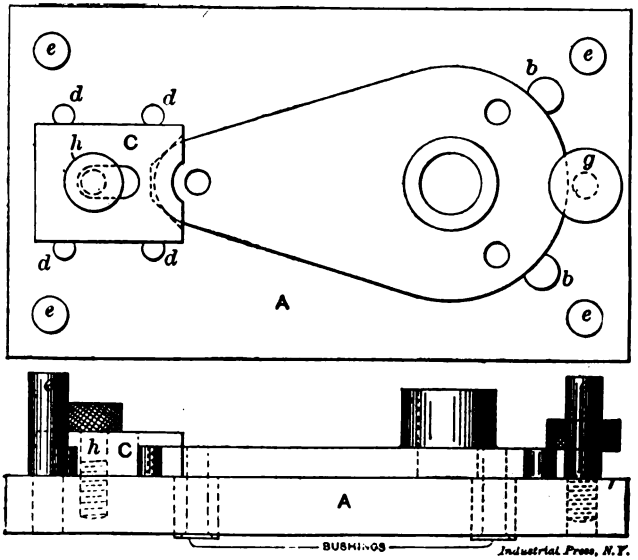

Fig. 49. Jig for Drilling Piece Shown in Fig. 48, with Work in Position

Large size plates, all planed up, may be kept in stock for the jig bodies so that pieces of the required size can be readily cut off when

needed. This jig is very accurate, as with it the work can be brought close to the plate containing the drill bushings.*

The drill jig shown in Fig. 51 has proved very efficient for maintaining uniformity in the pieces drilled in this jig, one of which is shown in Fig. 50. For the work it is intended to do, this jig is rigid and simple and is designed to withstand the severe handling that a tool

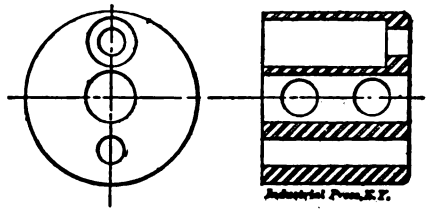

Fig. 50. Work to be Drilled in Jig, Fig. 51

of this kind usually receives from unskilled workmen. The pieces to be drilled are first turned in the lathe to the proper size and length, and the hole through the center is drilled at the same time. The object of the jig is to drill the side holes and the two end holes, which are diametrically opposite, one of them being stopped off at ⅛ inch from the bottom and continued through with a smaller size of drill.

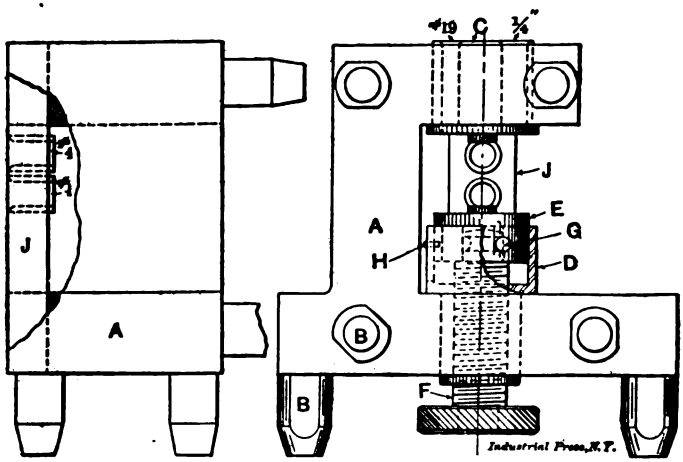

Fig. 51. Jig for Drilling Work shown in Fig. 50

The jig consists of an L-shaped casting, *A*, which is supported on its bottom and side by the steel legs, *BB*, the faces of which are hardened and lapped true. A hole is drilled straight through the jig from top to bottom, and into the top of this hole is forced the bushing, *C*, of tool steel, having a No. 19 and a ¼-inch hole, and also a guide for one end of the work projecting at the center on the lower side. The bushing

* Louis Meyers, February, 1902.

C is forced into the jig from the inside until the shoulder bears firmly against the upper arm of the jig. This combined bushing and guide is made in a single piece, instead of inserting drill bushings and a guide piece separately, because the variation allowed for the holes is greater than any that is likely to be incurred in the hardening of the bushing.

Fitted tightly in the hole in the base of the jig is the sleeve, *D*, which carries a traversing piece, *E*, with a guide point on one end directly opposite and like the one in the upper bushing. These guides fit the hole in the work, which is advanced or withdrawn by means of the screw *F*, which is fastened to the piece *E* by the pin, *G*, introduced in such a location that the side rests in a round groove on the upper end of the screw, attaching it thereto and at the same time permitting it to rotate freely. The end of a small pin, *H*, enters a spline in the side of *E* and checks any tendency to revolve when the screw is being turned. A knurled head is pinned and riveted on the

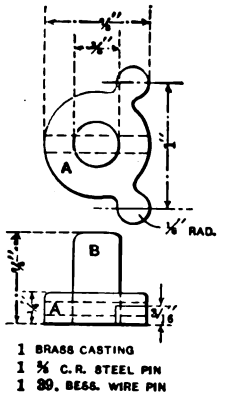

Fig. 52

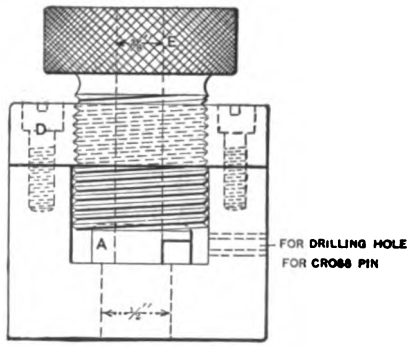

Fig. 53

Fig. 54

Drilling and Assembling Jig

end of *F*. A strip of machine steel, *J*, of sufficient length to extend from top to bottom of the jig, is seated in a rectangular milled channel and fastened by screws and dowel pins. The side holes are carefully located in this strip, and two hardened and ground bushings for No. 4 drills are pressed in.

When in use, the work is slipped on the upper guide point, and, when the piece *E* is advanced by the hand screw, it is held firmly in place, being properly located in relation to the bushings by the center hole. The piece is then drilled as in ordinary jig drilling, the finished piece being removed by simply loosening up the hand screw. The piece *E*, with the exception of the guide on its end, is left soft for the point of the drills to enter the necessary depth for clearance.*

* C. H. Rowe, December, 1903.

Drilling and Assembling Jig

Sometimes drill jigs are designed for the performing of other operations in connection with the work than that of drilling alone. In Fig. 53 is shown a combined drilling and assembling jig which was designed and made for the purpose of facilitating the manufacture of the part shown in detail in Fig. 52. This detail consists of a brass casting *A* having a small machine steel stud *B* driven into its center and securely held against turning by a small bessemer wire pin through both casting and stud.

During the ordinary course of manufacturing with a plain drilling jig some difficulty was experienced in driving the studs squarely into the casting, thereby making it impossible to replace the pieces in their proper position in the jig in order to drill the small pin holes. To overcome this difficulty and insure the production of interchangeable work, the jig shown was designed to drill the necessary two holes before removing the part from the jig. It is very simple in construction, consisting of a cast iron body *C*, and a soft steel cover *D*, fitted with a tool steel screw bushing *E* for locating and fastening the casting in its proper position for drilling. The work is slipped in and removed from the front of the jig which is open, as shown.

To relieve the shearing strain on the small cross pin, it is necessary that the ⅜-inch hole shall be drilled a trifle small in order to make a good fit on the stud. This is accomplished by using a ⅜-inch drill that has been almost entirely used up and is therefore about 0.373 inch in diameter, thus avoiding the use of letter size or other drills that are not standard. After drilling, the jig is turned bottom side up and the stud inserted through the ½-inch hole in the bottom and driven home with the aid of the punch shown in Fig. 54. This is simply a piece of ½-inch drill rod having a groove turned at one end to clear the burr made by the drill. It is evident that when driven in this manner, the stud must go in square, and when the punch strikes the brass casting in the jig the stud has been driven to its proper depth, that is, flush with the bottom of the brass casting. The small pin hole is then drilled and the finished part removed by unscrewing the bushing.*

This jig permits rapid work, on account of its simple and efficient device for clamping the screw bushing. Clamping devices in jigs should always be designed with the object of very rapid tightening and releasing. This is particularly important in cases where only one or a few small holes are drilled in a piece, as then, if the clamping of the work consumes a rather long time, it often happens that most of the operator's time is spent in unscrewing and tightening long threaded studs or screw bushings, while the drilling operation itself takes but a trifle of the time, and the machine is, in fact, idle the greater part of the working day. Rapid insertion of work in jigs, and quick acting clamping devices, constitute one of the chief principles in jig design.

* H. J. Bachmann, December, 1905.

Simplicity in Jig Design

Another of the chief characteristics in jig design, which should be aimed at as much as possible, is simplicity. It is comparatively easy to design a complicated drill jig for almost any work, and one of the main differences between the amateur and the experienced jig designer is the latter's ability to attain, by simple means, the same results, and the same accuracy, as the former reaches by elaborate devices.

An example of a simple jig which performs the work for which it is intended as satisfactorily as a more complicated tool, is shown in Fig. 55. The work to be drilled is shown at the top in perspective. At *A* is a ⅞-inch tapped hole in a curved surface, as shown; *a a* are two

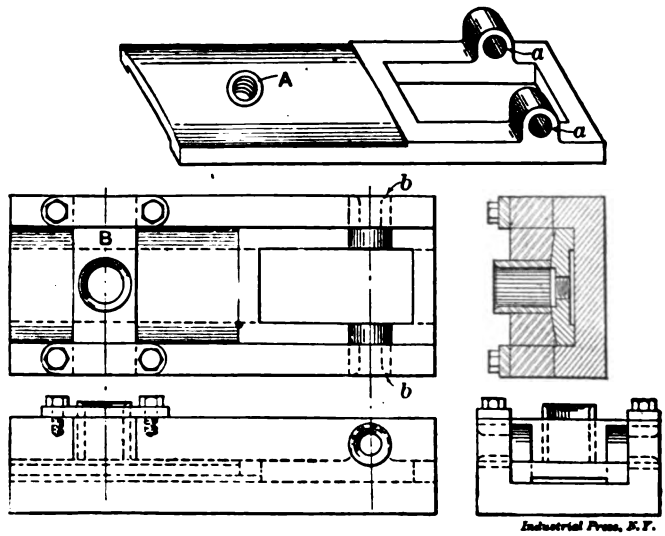

Fig. 55. Simple Design of Drill Jig

½-inch holes in the ears, which must be 7 inches from center to center from hole *A*. A cast iron jig body, of the right size to hold the piece of work inside, was made, and bushings *b b* inserted for drilling the holes in the ears. For drilling the ⅞-inch holes *A*, a cross-piece *B* was fitted into recesses cut in the sides of the jig body and this cross-piece carried a bushing, as shown. This cross-piece was held in place by two straps, as indicated. As the hole had to be countersunk, a combined drill and countersink was made, which did both operations at one cut. The work is pushed into the jig from the end, and some clamping arrangement, two C-clamps, for instance, will serve to hold it in position while drilling.*

Jigs for Drilling Rough Castings

There is a great difference in the principles of jig design applying to pieces of work which have finished surfaces from which the work may be located, and castings which are drilled directly as they come

* Frank C. Hudson, May, 1902.

from the foundry. It is not very difficult to design a jig when there is some part of the casting finished to size, but when there is practically nothing to start from, it becomes quite a different matter. If we are to judge from the number of discarded jigs in the shops, it seems that quite a few tool designers have "fallen down" on this problem.

One principal feature of these jigs is the screw bushings, two of which are shown enlarged in Fig. 58. By screwing down on the bush-

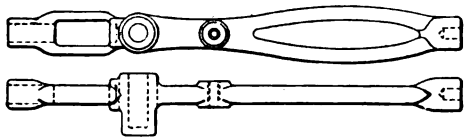

Fig. 56. Work to be Drilled in Jig, Fig. 57

ing the casting is clamped between the screw bushing and a plain bushing in the bottom of the jigs. Thus it will be seen that these bushings perform the double function of locating the hole and also holding the casting securely in its proper position in the jig. When only one end of the boss is accessible, the plain bushing cannot be used, and other means must be devised to back up the thrust of the screw bushing. Being movable, screw bushings will take care of any reasonable variation in the size of the castings and also insure that the hole shall be drilled in the center of the boss, the bushing being recessed

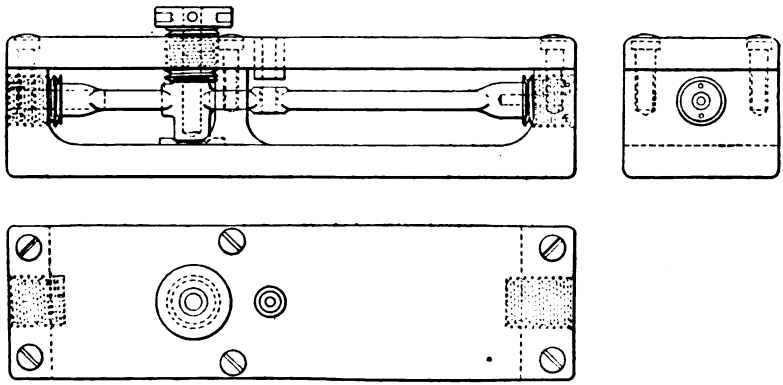

Fig. 57. Jig for Drilling Work Shown in Fig. 56

in the portion binding against the boss in order to center it. This latter condition is very desirable in work of this kind, for the sake of appearance and strength. In this form, screw bushings are rendered applicable to all forms of castings having any kind of a circular projection or boss over which the bushings may be fitted, as shown in the cuts, Figs. 57 and 60.

When headless bushings are necessary (as on both ends of the jig, Fig. 57), they are tightened down with a spanner, whereas a plain drill rod pin is sufficient for the other. When both ends of the boss are held by bushings, the holes to receive these bushings must be in

line, and when they are so aligned, it is impossible for the hole to come out of center on either end of the boss. The simplest and safest way to align these holes is to run a single-pointed boring bar through the screw bushing into the bottom of the jig, after the screw bushing has been fitted to the jig, the shank of the boring bar, of course, being a good fit in the hole of the screw bushing, which has been previously lapped to size. On the larger sizes of bushings, it has been found advantageous to use a good quality of machine steel, case-hardened and having a smaller tool steel bushing inserted in the center. When made

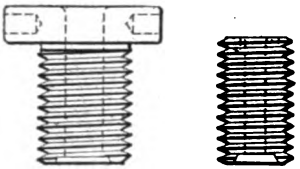

Fig. 58. Screw Bushings

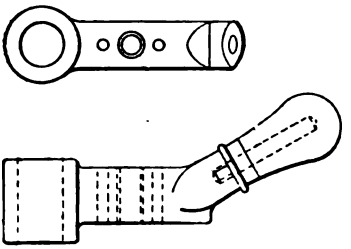

Fig. 59. Work to be Drilled in Jig, Fig. 60

entirely from tool steel, the distortion in hardening is too great to allow a good fit, which is essential on the threaded portion. The bodies of the jig should be made of cast iron, cradle-shaped, and cut out where possible, to facilitate cleaning. The covers which hold the screw bushings should be of machine steel, held in place by means of screws and dowels.

Two examples of jigs of this class are shown. The larger jig, Fig. 57, was designed for drilling the breast drill frame shown in Fig. 56.

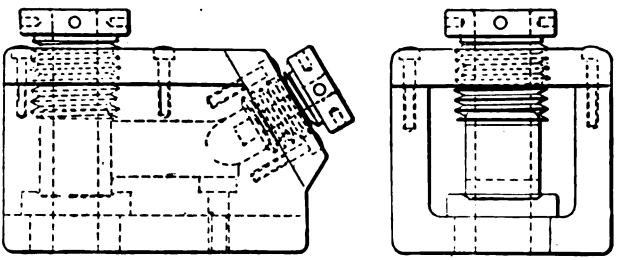

Fig. 60. Jig for Drilling Work Shown in Fig. 59

The casting is clamped by the large bushing first, and then the smaller bushings on the ends are brought up just tight enough not to cause any spring in the casting. There are two holes in this frame which must be reamed square with each other. After trying unsuccessfully to ream the holes by hand after drilling in the jig, the holes were reamed in the jig as follows: The hole in the bushing was made the exact size of the hole to be reamed in the casting. A drill of this size was used to spot the hole, following with a reamer drill, and lastly with a rose reamer, making in every respect a satisfactory job.

The difficulty with a jig of this design, in general, is that the castings will warp, throwing them out of true, and it is then not possible to locate them as described. The Hoefer Mfg. Company, Freeport, Ill., has found that in drilling pieces of this character, the stop underneath, in the center of the jig, in which the boss of the casting to be drilled rests, should be made adjustable, with a spring under the stop. The tension of this spring should be just enough to carry the weight of the piece. When placing the piece in the jig the two end bushings are then adjusted so that the boss of the work centers in the stop. By

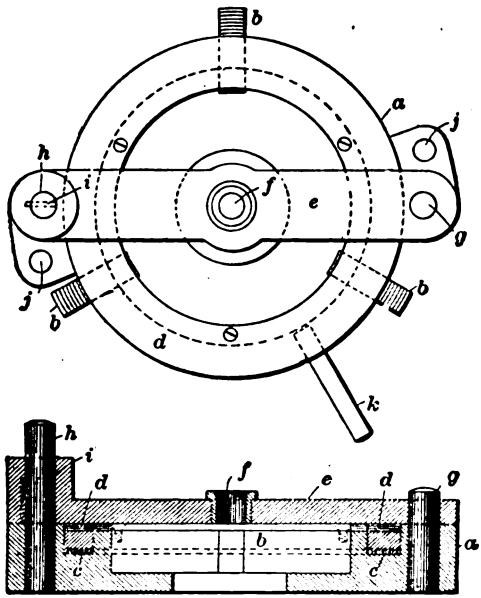

Fig. 61. Jig for Drilling and Boring Cast Gears

means of a clamping screw this stop is then held rigidly in place, and the drilled bushing finally screwed down tightly from the top.

The smaller jig, shown in Fig. 60, designed for the simple lever shown in Fig. 59, presents no difficulties beyond the drilling and tapping of the hole for the wooden handle at an angle of 30 degrees. An adjustable stud screwed into the bottom of the jig resists the pressure of the bushing on the angle. In this jig it is also necessary to clamp the larger boss first, so that when the smaller bushing is tightened, there will be no tendency to displace the casting. The same procedure was followed in the case of the tapped hole as in the case of the reamed hole in the jig previously described, namely: full size drill to spot, tap drill and then the tap itself. This latter was operated by means of a tapping attachment with friction clutch. It is hardly necessary to say that these jigs are most profitably employed in connection with a multiple-spindle drill press.*

* H. J. Bachmann, December, 1904.

Jig for Drilling and Boring Gears with Cast Teeth

Cast spur gears should be held from the outer ends of the teeth at three points as nearly equally spaced as possible. The holding should be done by jaws moving to and from the center. The outer ends of the teeth are selected because they are less liable to distortion by the washing of sand and by swelling than other parts of the teeth, and any slight lumps are much more likely to be removed in the tumbling barrel from the ends than elsewhere. Again, it is much more convenient to hold them from these points than otherwise. If three equally spaced points on the periphery of a gear are held true with the jig

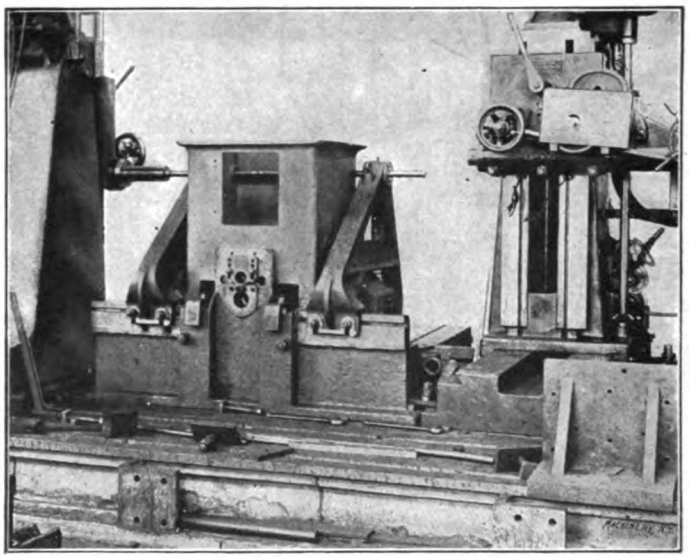

Fig. 62. Large Drilling and Boring Jig for Machine Beds

bushing, all intermediate points must be well located for the boring operation.

The manner of holding as described may be accomplished by several devices. One of these is a special form of scroll chuck. The same jig chuck may be made to accommodate different sizes of gears within a limited range with, it may be, the exchange of bushings.

Fig. 61 shows top and sectional views of such a jig. Referring to this figure, *a* is the main body casting, which is planed to receive the three steel jaws *b* and turned to admit the scroll ring which will be seen at *c*, while *d* is a steel ring used to retain the jaws and scroll. At *e* is seen the cross-bar for the support of the bushing *f*. This cross-bar is held in place by two guide pins *g* and *h*. The latter is longer than the former, so that when a gear is to be removed from the jig, the cross-bar may be raised only sufficiently to clear the short guide pin and then swung aside upon the longer one. The end of the cross-bar engaging the long pin is provided with a boss of sufficient length

to insure a parallel movement and prevent cramping. At *i* will be noticed a pin driven into the tall guide pin and left projecting into a slot. This acts as a stop to prevent the cross-bar from slipping down again when swung aside until again brought into line with the short guide pin. At *j* are seen holes for attaching the jig to the drill press table. A handle for revolving the scroll ring is shown at *k*.*

Drilling and Boring Jig for Machine Beds

The jigs shown hitherto have, in general, been intended for work of comparatively small dimensions. Modern machine manufacture, however, has developed jigs of unusual dimensions for very large pieces of work. The jig shown in Fig. 62 is used at the works of the Landis Tool Co., Waynesboro, Pa., for drilling and boring the beds of their smallest size grinding machines. The cut shows the work in progress on a large horizontal boring mill. The jig consists of a base provided with an adjustable plate for drilling the holes in the front, and adjustable brackets for guiding the bars for boring the ends of the bed. The base consists of a heavy casting, planed at the top, so as to correspond with the planed portion of the top of the bed, so that the latter may be laid bottom up on this base and located transversely by the planed lip on the front of the bed, suitable clamps being provided to hold it firmly in position. At the front of the base of the jig is a vertically projecting flange or apron of sufficient size, and so shaped as to conform to the shape required for locating most of the holes in the front of the bed; at the back part of the base is a smaller flange adapted for carrying a bushing for guiding the bar for one of the larger of these holes. Suitable T-slots are provided in the base for bolting on the various parts, and at the bottom two right-angle grooves are planed to provide for a tongue for locating on the floorplate of the boring mill. This jig is designed to accommodate two sizes of beds or similar cross sections but of different lengths, the difference being such as to only affect the location of the end brackets and some of the holes in the front of the bed. To provide for the difference of these latter holes, the adjustable plate in the front is so designed that it can be located by dowel pins in either of two positions required, and is provided with slots for clamping bolts. When boring the holes in the ends of the bed, the base of the jig is, of course, turned from the position that it has, when the front holes are bored, to the position shown in the cut. The end brackets are clamped in place, being located on the finished surface of the base. T-slots are provided so that these brackets may be shifted in or out to accommodate the different length of the beds.†

Jigs with Pneumatic Clamping Devices

During the last few years compressed air has more and more become one of the necessary adjuncts of the machine shop, and many firms employ it extensively in the operation of automatic machinery and special tools. The line cuts Figs. 63 and 65 and the half-tone Fig. 64 show a pneumatic clamp drilling jig which was designed for holding

* Cyril B. Clark, June, 1904.
† H. F. Noyes, March, 1907.

small castings, pinions, spur gears, sprockets, pulleys, etc., for reaming or drilling. This type of jig is used with great success in one of the largest manufacturing concerns in Chicago. Formerly castings of the nature named were held in a jig, using a screw bushing mounted in a swinging arm to hold the work while drilling; the arm was swung around over the casting and the bushing was screwed down onto the work. Frequently the operator would neglect to screw the bushing

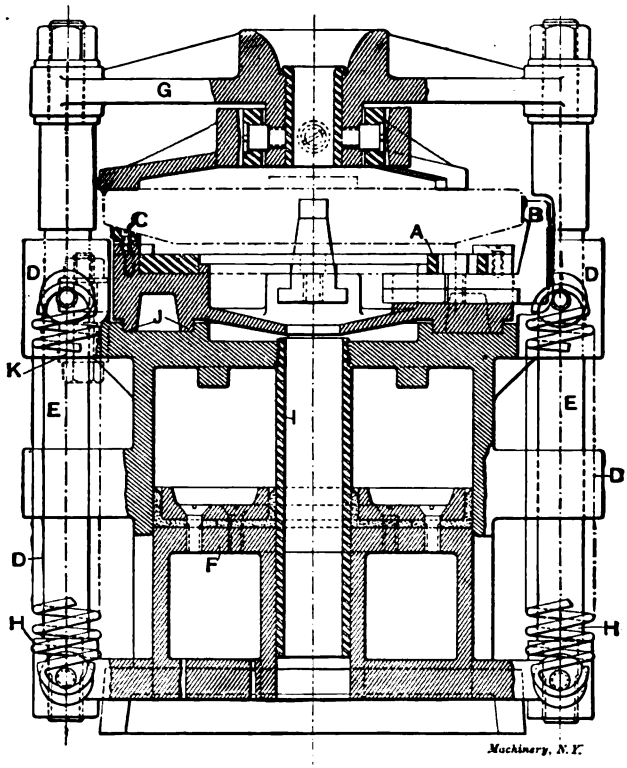

Fig. 63. Vertical Section of Pneumatic Clamping Jig

down tightly against the work, with the resultant of a bad job of drilling and a spoiled piece. In any case there was considerable time lost in operating the jig.

The air clamping drilling jig shown in section in Fig. 63 was designed to decrease the time required to operate the jig and to improve the character of the work done. The cut shows how a bevel gear is held. The gear rests on the inclined face *C*, and between three chuck jaws. Beneath the casting is a ring, *A*, having three cam eccentric slots which move the jaws *B* toward or away from the center when the ring is turned by a suitable handle. With this jig the operator needs only to turn an air valve handle to hold the work securely and

in the central position. To hold spur gears, a centering piece is used, similar to the one shown for bevel gears in Fig. 63, with the exception that the surface *C* is made flat, the jaws then being used alone to center the work.

The jig includes a cylinder having two lugs or ears *D*, which encircle the guides *E*. These guides connect the piston *F* with the cross-arm or yoke *G*, which holds the drill bushing. The admission of air to the

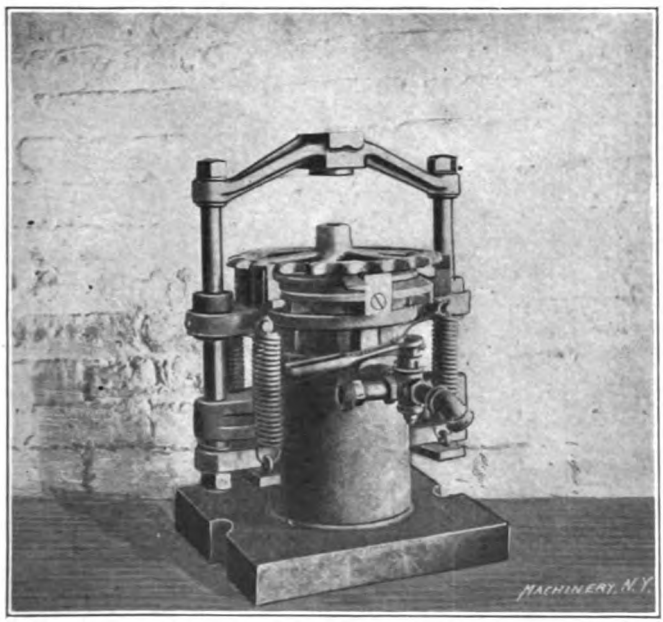

Fig. 64. Pneumatic Clamping Jig used for Drilling Sprocket Wheel

cylinder forces the yoke and bushing down on the work and holds it there until the piece is finished. The air is then released and the tension springs *H*, of which four are provided, pull the piston and the connected cross-arm up and release the work. Compressed air is admitted in the side of the cylinder through a pipe in which is fitted an ordinary three-way valve. The pipe *I* in the center of the cylinder is an important feature, as it permits chips to fall through the jig at the bottom instead of collecting on the top. What few chips accumulate on the top are removed by a hose leading from the exhaust port of the valve and directed against the top of the cylinder, thereby blowing the chips away with each exhaust. The centering device is made different, of course, for different pieces, Fig. 63 showing one for a "flat" bevel gear; and each pattern of pinion, gear or sprocket has to have a corresponding piece *C*. The cylinder has an annular groove *J* turned in the top and made concentric with the axis of the cylinder and of the drill jig. The centering device has two projections which fit the cylin-

der top and groove. This makes the air cylinder conveniently interchangeable with any number of centering devices, the centering device being removed quickly so that there is little time lost in making changes, the clamping being a simple matter. The cylinder has three lugs *K* with open slots for bolts, these matching with three lugs on the centering device and constituting the clamping arrangement for the centering piece. When the centering piece is to be changed, the three bolts are loosened, slipped out of the slots, and the centering piece is lifted out and exchanged for another.

If the drill bushing has to be changed, the yoke *G* is taken off and replaced by another, for it is generally desirable to have a yoke with

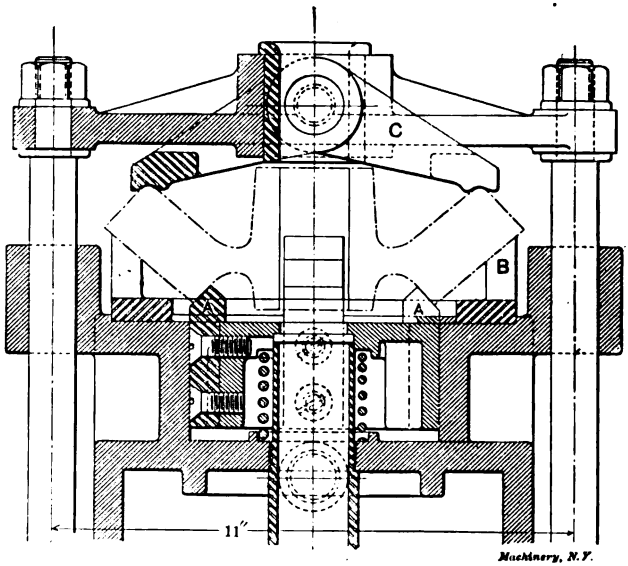

Fig. 65. Vertical Section of Pneumatic Jig Fitted with Equalizing Centering Device

its own bushing for each job. With small work the yoke simply has a bushing driven from the bottom, as illustrated in the half-tone Fig. 64, and the bushing alone presses against the work, but for larger work, which should be held down at three places on the rim, the yoke and clamp are connected with a universal joint as illustrated in Fig. 63, thus insuring equal pressure on the three clamping points.

Fig. 65 is a centering device, used on the air-cylinder, in which there is a float. This float rests on a heavy spring, and on the float are three lugs *A* which support the gear casting. This device centers the casting, while the yoke is pulled down by air pressure until the gear rests on the three stationary surfaces *B*. The yoke with its equalizing saddle *C* holds the bevel gear firmly while drilling.*

In the design of all devices using compressed air, care should be taken to economize as much as possible with the air, making the spaces

* O. C. Bornholt, April, 1907.

it has to fill as small as possible. In the jig shown this has not been thoroughly taken into consideration. The long motion of the piston, entirely operated by air, makes it necessary to fill a great space with air each time the work is clamped. In such cases it is usually possible to move the clamp down upon the work with a mechanical movement requiring no air, and then effect only the actual clamping by the compressed air, in which case it would probably not be necessary to use one-tenth the amount of air now used in the jig

CHAPTER IV

DIMENSIONS OF STANDARD JIG BUSHINGS

In the design of drill jigs there is little save experience and judgment to guide the draftsman when determining the dimensions of the drill bushings. This often results in having bushings for the same size of drill made with widely varying dimensions as to length and outside diameters. If, on the other hand, some standard is adopted

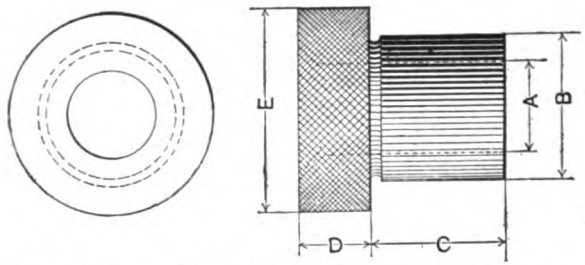

TABLE 1. DIMENSIONS FOR STANDARD FIXED JIG BUSHINGS

Size Drill. A	B	C			D	E
		Short.	Med.	Long.		
60	$\frac{1}{4}$	$\frac{1}{4}$	$\frac{5}{16}$	$\frac{5}{16}$	$\frac{3}{32}$	$\frac{5}{16}$
$\frac{5}{16}$	$\frac{3}{8}$	$\frac{1}{4}$	$\frac{5}{16}$	$\frac{5}{16}$	$\frac{3}{32}$	$\frac{5}{16}$
$\frac{1}{4}$	$\frac{3}{8}$	$\frac{1}{4}$	$\frac{5}{16}$	$\frac{5}{16}$	$\frac{3}{32}$	$\frac{5}{16}$
$\frac{1}{4}$	$\frac{3}{8}$	$\frac{1}{4}$	$\frac{5}{16}$	$\frac{5}{16}$	$\frac{3}{32}$	$\frac{5}{16}$
$\frac{1}{4}$	$\frac{3}{8}$	$\frac{1}{4}$	$\frac{5}{16}$	$\frac{5}{16}$	$\frac{1}{8}$	$\frac{3}{8}$
$\frac{1}{4}$	$\frac{3}{8}$	$\frac{1}{4}$	$\frac{5}{16}$	$\frac{5}{16}$	$\frac{1}{8}$	$\frac{3}{8}$
$\frac{9}{32}$	$\frac{3}{8}$	$\frac{1}{4}$	$\frac{5}{16}$	$\frac{5}{16}$	$\frac{1}{8}$	$\frac{3}{8}$
$\frac{9}{32}$	$\frac{3}{8}$	$\frac{1}{4}$	$\frac{5}{16}$	$\frac{5}{16}$	$\frac{1}{8}$	$\frac{3}{8}$
$\frac{5}{16}$	$\frac{7}{16}$	$\frac{5}{16}$	$\frac{3}{8}$	$1\frac{5}{8}$	$\frac{1}{8}$	1
$\frac{5}{16}$	$\frac{7}{16}$	$\frac{5}{16}$	$\frac{3}{8}$	$1\frac{5}{8}$	$\frac{5}{32}$	$1\frac{1}{16}$
$\frac{5}{16}$	$\frac{7}{16}$	$\frac{5}{16}$	$\frac{3}{8}$	$1\frac{5}{8}$	$\frac{5}{32}$	$1\frac{1}{16}$
$\frac{5}{16}$	$\frac{7}{16}$	$\frac{5}{16}$	$\frac{3}{8}$	$1\frac{5}{8}$	$\frac{5}{32}$	$1\frac{1}{16}$
$\frac{5}{16}$	$\frac{7}{16}$	$\frac{5}{16}$	$\frac{3}{8}$	$1\frac{5}{8}$	$\frac{3}{16}$	$1\frac{1}{16}$
$\frac{5}{16}$	$\frac{7}{16}$	$\frac{5}{16}$	$\frac{3}{8}$	$1\frac{5}{8}$	$\frac{3}{16}$	$1\frac{1}{16}$
$\frac{5}{16}$	$\frac{7}{16}$	$\frac{5}{16}$	$\frac{3}{8}$	$1\frac{5}{8}$	$\frac{3}{16}$	$1\frac{1}{16}$
1	1	$\frac{5}{16}$	$\frac{3}{8}$	$1\frac{5}{8}$	$\frac{1}{4}$	$1\frac{1}{8}$
1	$1\frac{1}{8}$

the jig. Table 2 gives dimensions for removable bushings, and in this case the outside diameter would be made a light sliding fit in the hole. In both tables the column *A* indicates the size of drill for which the

TABLE 2. DIMENSIONS FOR STANDARD REMOVABLE JIG BUSHINGS

Size Drill. A	B	C			D	E
		Short.	Med.	Long.		
60 to 40	$\frac{5}{16}$	$\frac{3}{8}$	$\frac{1}{2}$	$\frac{3}{4}$	$\frac{1}{2}$	$\frac{9}{16}$
40 to 26	$\frac{7}{16}$	$\frac{3}{8}$	$\frac{1}{2}$	$\frac{3}{4}$	$\frac{5}{8}$	$\frac{3}{4}$
26 to 1	$\frac{7}{16}$	$\frac{3}{8}$	$\frac{1}{2}$	$\frac{3}{4}$	$\frac{5}{8}$	$\frac{3}{4}$
$\frac{7}{32}$ to $\frac{13}{64}$	$\frac{1}{2}$	$\frac{3}{8}$	$\frac{1}{2}$	1	$\frac{5}{8}$	$\frac{13}{16}$
$\frac{1}{4}$ to $\frac{3}{8}$	$\frac{1}{2}$	$\frac{3}{8}$	$\frac{1}{2}$	$1\frac{1}{2}$	$\frac{5}{8}$	1
$\frac{25}{64}$ to $\frac{7}{16}$	$\frac{11}{16}$	$\frac{3}{8}$	$\frac{1}{2}$	$1\frac{1}{2}$	$\frac{7}{8}$	$1\frac{1}{8}$
$\frac{29}{64}$ to $\frac{17}{32}$	$\frac{3}{4}$	$\frac{3}{8}$	$\frac{1}{2}$	$1\frac{1}{2}$	$\frac{7}{8}$	$1\frac{1}{8}$
$\frac{33}{64}$ to $\frac{37}{64}$	$\frac{7}{8}$	$\frac{3}{8}$	$\frac{1}{2}$	$1\frac{1}{2}$	$\frac{7}{8}$	$1\frac{1}{4}$
$\frac{9}{16}$ to $\frac{41}{64}$	$\frac{11}{16}$	$\frac{3}{8}$	1	$1\frac{1}{2}$	$\frac{7}{8}$	$1\frac{3}{8}$
$\frac{43}{64}$ to $\frac{47}{64}$	1	$\frac{3}{8}$	1	$1\frac{1}{2}$	$\frac{7}{8}$	$1\frac{7}{16}$
$\frac{49}{64}$ to $\frac{53}{64}$	$1\frac{1}{16}$	$\frac{3}{8}$	1	$1\frac{1}{2}$	$\frac{7}{8}$	$1\frac{1}{2}$
$\frac{27}{32}$ to $1\frac{5}{16}$	$1\frac{1}{8}$	$\frac{3}{8}$	1	$1\frac{1}{2}$	$\frac{7}{8}$	$1\frac{5}{8}$
$\frac{15}{16}$ to 1	$1\frac{1}{2}$	$\frac{3}{4}$	1	$1\frac{1}{2}$	$\frac{7}{8}$	$1\frac{3}{4}$

bushing is to be used, and the hole in the bushing would be made from 0.001 to 0.003 inch larger than nominal size. The bushing shown in the cut above Table 1 has a knurled head. Of course, the head is only knurled on removable bushings.*

TABLE 3

BUSHINGS FOR DRILLING AND REAMING JIGS

D	A	B	C	E	D	A	B	C	E
$\frac{3}{16}$	$\frac{7}{16}$	$\frac{9}{16}$	$\frac{5}{8}$	$\frac{3}{32}$	$1\frac{5}{8}$	$2\frac{1}{4}$	$2\frac{1}{2}$	$1\frac{1}{2}$	$\frac{1}{4}$
$\frac{1}{4}$	$\frac{1}{2}$	$\frac{5}{8}$	$\frac{5}{8}$	$\frac{3}{32}$	$1\frac{3}{4}$	$2\frac{7}{16}$	$2\frac{11}{16}$	$1\frac{1}{2}$	$\frac{1}{4}$
$\frac{5}{16}$	$\frac{9}{16}$	$\frac{11}{16}$	$\frac{5}{8}$	$\frac{3}{32}$	$1\frac{7}{8}$	$2\frac{5}{8}$	$2\frac{7}{8}$	$1\frac{1}{2}$	$\frac{1}{4}$
$\frac{3}{8}$	$\frac{11}{16}$	$\frac{13}{16}$	$\frac{5}{8}$	$\frac{1}{4}$	2	$2\frac{3}{4}$	3	$1\frac{1}{2}$	$\frac{5}{16}$
$\frac{7}{16}$	$\frac{3}{4}$	$\frac{7}{8}$	$\frac{5}{8}$	$\frac{1}{4}$	$2\frac{1}{4}$	$3\frac{1}{4}$	$3\frac{1}{2}$	$1\frac{1}{2}$	$\frac{5}{16}$
$\frac{1}{2}$	$\frac{13}{16}$	$\frac{15}{16}$	$\frac{3}{4}$	$\frac{1}{4}$	$2\frac{1}{2}$	$3\frac{3}{4}$	$3\frac{3}{4}$	$1\frac{1}{2}$	$\frac{5}{16}$
$\frac{9}{16}$	$\frac{7}{8}$	$1\frac{1}{8}$	$\frac{3}{4}$	$\frac{1}{4}$	$2\frac{3}{4}$	$3\frac{3}{4}$	$3\frac{3}{4}$	$1\frac{1}{2}$	$\frac{5}{16}$
$\frac{5}{8}$	1	$1\frac{3}{16}$	$\frac{3}{4}$	$\frac{1}{4}$	3	4	$4\frac{1}{4}$	$1\frac{1}{2}$	$\frac{5}{16}$
$1\frac{1}{16}$	$1\frac{1}{16}$	$1\frac{1}{4}$	$\frac{3}{4}$	$\frac{1}{4}$					
$\frac{3}{4}$	$1\frac{1}{8}$	$1\frac{3}{8}$	1	$\frac{3}{16}$					
$1\frac{3}{16}$	$1\frac{3}{16}$	$1\frac{5}{16}$	1	$\frac{3}{16}$					
$\frac{7}{8}$	$1\frac{5}{16}$	$1\frac{7}{16}$	1	$\frac{3}{16}$					
$1\frac{5}{16}$	$1\frac{3}{8}$	$1\frac{7}{16}$	1	$\frac{3}{16}$					
1	$1\frac{7}{16}$	$1\frac{11}{16}$	$1\frac{1}{8}$	$\frac{3}{16}$					
$1\frac{1}{8}$	$1\frac{1}{8}$	$1\frac{1}{8}$	$1\frac{1}{8}$	$\frac{3}{16}$					
$1\frac{1}{8}$	$1\frac{1}{8}$	2	$1\frac{1}{8}$	$\frac{3}{16}$					
$1\frac{3}{8}$	$1\frac{13}{16}$	$2\frac{1}{16}$	$1\frac{1}{8}$	$\frac{3}{16}$					
$1\frac{1}{2}$	$2\frac{1}{8}$	$2\frac{3}{8}$	$1\frac{1}{2}$	$\frac{1}{4}$					

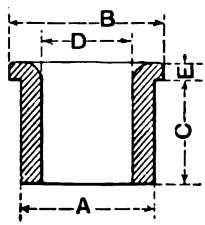

Machinery, N.Y.

Table 3 gives the dimensions for drill bushings for a wider range of drill sizes, according to the adopted standard of a large manufactur-

* MACHINERY, April, 1904.

ing concern in Chicago. It will be noticed that the shoulders are much smaller than generally used. There is no real need for the shoulder of a loose or removable bushing to be larger than is necessary for a good finger hold. By keeping the shoulder dimensions down to the figures given in the table, a considerable saving of steel is effected in the larger sizes, and when this amount is multiplied by the thousands of bushings necessary in large machine shops, it becomes a very important matter. Another feature of economy possible in bushings is the use of machine steel, case-hardened, which gives as good results for some work as tool steel, and of course is far less costly, both in price per pound and in time required for working.*

Hardening Small Jig Bushings

To harden large quantities of small jig bushings without danger of cracking under the head while hardening or while driving them home, proceed as follows: Put one gallon of fish oil in a suitable metal bucket, and place this in a larger bucket of cold water. The bushings, strung about six on a wire, are heated in a small blow torch fire to a light red heat and are then quickly plunged into the oil, and kept moving around until cold. The hardness will depend upon the degree of heat given, and this can be so regulated that it will not be necessary to polish and draw bushings after hardening.†

* O. C. Bornholt, May, 1905.
† H. J. Bachmann, November, 1905.

CHAPTER V

USING JIGS TO BEST ADVANTAGE*

It may be deemed proper, in the closing chapter, to review, in general outlines, the principles of jig design, and to give some directions for getting the full value out of jigs.

Competition and the growing demand for machinery have necessitated the introduction of improved tools to reduce the cost. Jig and fixture designing has come to be a trade by itself; undoubtedly there is no branch of the mechanical business which requires so much practical experience as this particular line. A poorly designed tool is a very costly thing; hundreds of dollars can be wasted in a short time with an inferior one. On its accuracy, simplicity and quickness depend quality and quantity, hence cost of product.

There are a number of obstacles to be overcome in accurate jig and fixture designing. The clamping must be done quickly and without springing the jig or the work; then provision must be made for easy cleaning out of chips, and another very important thing is, that it must be so constructed that it will be impossible to get the work in the wrong way. It is important to make drilling jigs as light as possible. To obtain lightness, just as little metal must be used as is necessary to sustain the strain brought to bear upon the part. All metal should be so placed as to be in line with the strains exerted thereon; therefore, jigs should be box-shaped. The advantages obtained are manifold, for, while they are light, they are also easily cleaned. Some of the older manufacturers still advocate the use of heavy drilling jigs—large, cumbersome things, and slow to handle. Their reason is that a light jig will not stand the rough handling. While that is true in a way, there ought not to be any necessity for such rough usage. A proper system in the shop would overcome this.

It is customary in a good many of the large shops in the Eastern States particularly to hire green men and boys to operate the jigs and fixtures. If it is a drilling jig, especially a small one, the gang drill is set up for that purpose; each spindle in rotation is set up for its respective operation. The men that set these machines are competent machinists, and they always keep one or more machines set up for the first one who gets out of a job. They are also responsible for the quality and quantity of work turned out. For instance, a drill or reamer may get roughed up and in this manner spoil the work or a drill bushing. Therefore, it keeps the machinists in charge on a constant outlook. The operators are provided with a gage and a sample piece which is correct. They are instructed how to use it; also to try every few pieces to see that they are coming like the sample. In this manner one good man can direct the work of a dozen cheap ones.

* MACHINERY, August, 1904, and February, 1905.

In the following outline of a system for getting the most out of the tools in the shop, the word "jig" will be meant to include all jigs, templets, fixtures, appliances, etc., which aid in the rapid and accurate machining of parts. With such assumptions allowed, the necessity for some systematic scheme of management for the use and care of the jigs should be apparent. However, it is not uncommon, even in these days, when the jig is admittedly one of the main factors instrumental in developing the shops of the past (where machinery was "built"), into the shops of the present (where it is "manufactured"), to find concerns where the jigs are given no consideration beyond designing them and keeping them in a questionable state of repair. The whole tool or jig scheme, however, is so interwoven with the entire shop that the success of a system cannot be dependent entirely upon any one person, but upon the co-operation of all.

DRILLING JIG SET-F 42 C.
1 JIG
1 " LID
4 THUMB NUTS
2 SET SCREWS
5 BUSHES
TWIST DRILLS - 31/32" - 3/4" - 17/32" - 1/2"
TAP - 5/8" - 10 THREAD MACHINE
REAMER 1" MACHINE
" TAPER - SPECIAL NO. F 39

Fig. 66. List of Parts of Jig, and Tools used with same

DRILLING OPERATION SHEET F 42 C.
DRILL 31/32"
REAM 1"
REVERSE LID AND
DRILL 17/32"
TAP 5/8" - 10 THREADS
DRILL 3/4"
" 1/2"
REAM 1/2" SPEC. NO. F 39
NOTE:- CARE MUST BE TAKEN THAT CHIPS DO
NOT ACCUMULATE IN CORNERS OF JIG.
NOTE:- DO NOT TIGHTEN TOO MUCH ON SET
SCREWS AS THERE IS DANGER OF SPRINGING
WORK.

Fig. 67. List of Operations to be performed

The tool foreman is the one, after the management, who contributes most to either success or failure, and therefore his selection should be made with care. This tool foreman, as we prefer to call him, is to the modern shop what the head toolmaker was to the old-time shop, and his increased duties and responsibilities entitle him to the new title. He should possess executive as well as mechanical ability, and be broad-minded and up-to-date, for to him should be intrusted the tooling of the machines, the design, manufacture and care of the jigs, the complete control of the tool-room and the enforcement of any system the management may inaugurate. He will, however, be doomed to only partial success, if not absolute failure, without a tool-room system.

Suitable methods should prevail in the tool-room, or better, in the jig-room, whereby a workman when receiving a jig gets all the necessary tools to perform all the operations upon the piece that the jig is designed to do. It should not be necessary for him to ask for the tools separately, but simply to ask for the jig and tools for such or such an operation, designated either by name or number—preferably by number—and have them delivered to him complete. By doing this, much time will be saved, and mistakes will often be avoided. This can

be accomplished by giving each jig all the loose pieces belonging to the jig and all the special tools, the same number as the piece they are used upon. They should be indexed under this number and kept in suitably grouped compartments and the compartments conspicuously numbered so that they can be easily located. In these compartments is also kept a list, Fig. 66, showing what constitutes a complete set. When a jig is called for, reference is made to the index, if necessary, the compartment found and the complete set of jig and tools delivered with reference to the list.

Probably one-half of all jigs are designed to perform two or more operations, and when such is the case, to economize in time and often to obtain the best results in machining, each jig should have its operation sheet, Fig. 67. To illustrate why it is necessary to perform the several operations in a prearranged order, take, for instance, two holes intersecting at acute angles, such as a shaft hole and a locking rod hole, where the locking rod hole drills half out into the shaft hole. Ordinarily a workman would drill the larger or shaft hole first, and the locking rod hole afterward. This would be wrong, however, for the locking rod hole drill upon entering the shaft hole and meeting no resistance for half its diameter, would run out, and the hole would not be straight. A very handy arrangement is to have the tool sheet, Fig. 66, and the operation sheet, Fig. 67, mounted upon opposite sides of a cardboard. They should be of some convenient size, to be determined by the number of separate items it is necessary to put upon them.

It is regrettably too generally the custom to take for granted that a piece is right if it has been jigged, and in this way much work is often spoiled that could be avoided by the simple system of inspecting the first piece of every lot done in a jig and ascertaining its correctness. If the first piece is found to be correct, it is reasonably safe to assume that the rest will be. It is also well to provide printed blanks upon which defects and possible improvements in jigs are reported to the tool foreman. These are made out in duplicate by the foreman under whom the defects, etc., are discovered, he keeping the copy and sending the original to the tool-room. This method will be found to be superior to giving verbal instructions, as it is a check from one foreman to another. There is an adage which cannot be more appropriately applied than in the case of repairing jigs, and that is, "Don't put off until to-morrow what can be done to-day."

It seems hardly necessary to mention the matter of allowing repairs to be made upon jigs in any other place than the tool-room, because it is so obviously wrong that every one must see the fallacy of such a course and what a demoralized state of affairs it will lead to. In this matter there should be absolutely no margin. Whenever repairs are necessary on jigs, they should be turned over directly to the tool-room, and even the most trivial matters should be attended to by the man in charge of the jigs, as he is held responsible for results.

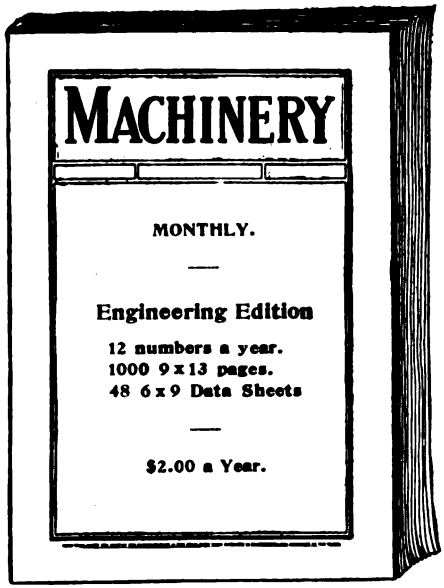

MACHINERY is the leading journal in the machine-building field and meets the requirements of the mechanical engineer, superintendent, designer, toolmaker and machinist, as no other journal does. MACHINERY is a monthly and deals with machine design, tool design, machine construction, shop practice, shop systems and shop management. The reading matter in MACHINERY is written by practical men and edited by mechanical men of long practical training. The twelve numbers a year contain a thousand pages of carefully selected and edited mechanical information.

Each number of MACHINERY contains a variety of articles on machine shop practice. These articles include carefully prepared descriptions of manufacturing methods and current mechanical developments. Shop systems and shop management are ably handled by the foremost writers. Every number contains the most extensive and complete monthly record published by any journal, or in any form, of new machinery and tools and accessories for the machine shop. A special department is devoted to "Letters on Practical Subjects," to which practical men contribute their experiences. There is a department of Shop Kinks—brief, concise little contributions which contain much value to the man in the shop or at the drafting table.

The mechanical engineer, machine designer and draftsman are also well provided for in MACHINERY. Exhaustive articles on the theory and practice of machine design, on the properties of materials, and on labor-saving methods and systems. There are reviews of research work in the mechanical field, valuable results of carefully made experiments are recorded, and the world's progress in every field of mechanical endeavor is closely watched.

One of the most valuable features is the four-page monthly Data Sheet Supplement printed on strong manila paper. These Data Sheets contain high-grade, condensed mechanical data, covering machine design, machine operation and kindred subjects. They are the cream of mechanical information.

No. 39. Fans, Ventilation and Heating.—Fans; Heaters; Shop Heating.

No. 40. Fly-Wheels.—Their Purpose, Calculation and Design.

No. 41. Jigs and Fixtures, Part I.—Principles of Jig and Fixture Design; Drill and Boring Jig Bushings; Locating Points; Clamping Devices.

No. 42. Jigs and Fixtures, Part II.—Open and Closed Drill Jigs.

No. 43. Jigs and Fixtures, Part III.—Boring and Milling Fixtures.

No. 44. Machine Blacksmithing.—Systems, Tools and Machines used.

No. 45. Drop Forging.—Lay-out of Plant; Methods of Drop Forging; Dies.

No. 46. Hardening and Tempering.—Hardening Plants; Treating High-Speed Steel; Hardening Gages; Hardening Kinks.

No. 47. Electric Overhead Cranes.—Design and Calculation.

No. 48. Files and Filing.—Types of Files; Using and Making Files.

No. 49. Girders for Electric Overhead Cranes.

No. 50. Principles and Practice of Assembling Machine Tools, Part I.

No. 51. Principles and Practice of Assembling Machine Tools, Part II.

No. 52. Advanced Shop Arithmetic for the Machinist.

No. 53. Use of Logarithms and Logarithmic Tables.

No. 54. Solution of Triangles, Part I.—Methods, Rules and Examples.

No. 55. Solution of Triangles, Part II.—Tables of Natural Functions.

No. 56. Ball Bearings.—Principles of Design and Construction.

No. 57. Metal Spinning.—Machines, Tools and Methods Used.

No. 58. Helical and Elliptic Springs.—Calculation and Design.

No. 59. Machines, Tools and Methods of Automobile Manufacture.

No. 60. Construction and Manufacture of Automobiles.

No. 61. Blacksmith Shop Practice.—Model Blacksmith Shop; Welding; Forging of Hooks and Chains; Miscellaneous Appliances and Methods.

No. 62. Hardness and Durability Testing of Metals.

No. 63. Heat Treatment of Steel.—Hardening, Tempering and Case-Hardening.

No. 64. Gage Making and Lapping.

No. 65. Formulas and Constants for Gas Engine Design.

No. 66. Heating and Ventilation of Shops and Offices.

No. 67. Boilers.

No. 68. Boiler Furnaces and Chimneys.

No. 69. Feed Water Appliances.

No. 70. Steam Engines.

No. 71. Steam Turbines.

No. 72. Pumps, Condensers, Steam and Water Piping.

THE FOLLOWING TITLES ARE PREPARED, AND WILL BE BROUGHT OUT IN 1911

No. 73. Principles and Applications of Electricity, Part I.—Static Electricity; Electrical Measurements; Batteries.

No. 74. Principles and Applications of Electricity, Part II.—Magnetism; Electro-Magnetism; Electro-Plating.

No. 75. Principles and Applications of [illegible]—Dynamos; Motors;

[illegible] **and Applications of** [illegible]—Electric Lighting.

[illegible] **and Applications of** [illegible] Telegraph and Tele-

[illegible] **end Applications of** [illegible] mission of

No. 79. [illegible] **uilding,** Part I.—Main and Side [illegible]

No. 80. Locomotive Building, Part II.—Wheels; Axles; Driving Boxes.

No. 81. Locomotive Building, Part III.—Cylinders and Frames.

No. 82. Locomotive Building, Part IV.—Valve Motion and Miscellaneous Details.

No. 83. Locomotive Building, Part V.—Boiler Shop Practice.

No. 84. Locomotive Building, Part VI.—Erecting.

No. 85. Mechanical Drawing, Part I.—Instruments; Materials; Geometrical Problems.

No. 86. Mechanical Drawing, Part II.—Projection.

No. 87. Mechanical Drawing, Part III.—Machine Details.

No. 88. Mechanical Drawing, Part IV.—Machine Details.

No. 89. The Theory of Shrinkage and Forced Fits.

No. 90. Railway Repair Shop Practice.

MACHINERY'S DATA SHEET SERIES

MACHINERY'S Data Sheet Books include the well-known series of Data Sheets originated by MACHINERY, and issued monthly as supplements to the publication; of these Data Sheets over 500 have been published, and 6,000,000 copies sold. Revised and greatly amplified, they are now presented in book form, kindred subjects being grouped together. The purchaser may secure either the books on those subjects in which he is specially interested, or, if he pleases, the whole set at one time. The price is 25 cents a book.

TITLES AND CONTENTS ON BACK COVER

[illegible]at is

CONTENTS OF DATA SHEET BOOKS

No. 1. Screw Threads.—United States, Whitworth, Sharp V- and British Association Standard Threads; Briggs Pipe Thread; Oil Well Casing Gages; Fire Hose Connections; Acme Thread; Worm Threads; Metric Threads; Machine, Wood, and Lag Screw Threads; Carriage Bolt Threads, etc.

No. 2. Screws, Bolts and Nuts.—Fillister-head, Square-head, Headless, Collar-head and Hexagon-head Screws; Standard and Special Nuts; T-nuts, T-bolts and Washers; Thumb Screws and Nuts; A. L. A. M. Standard Screws and Nuts; Machine Screw Heads; Wood Screws; Tap Drills; Lock Nuts; Eye-bolts, etc.

No. 3. Taps and Dies.—Hand, Machine, Tapper and Machine Screw Taps; Taper Die Taps; Sellers Hobs; Screw Machine Taps; Straight and Taper Boiler Taps; Stay-bolt, Washout, and Patch-bolt Taps; Pipe Taps and Hobs; Solid Square, Round Adjustable and Spring Screw Threading Dies.

No. 4. Reamers, Sockets, Drills and Milling Cutters.—Hand Reamers; Shell Reamers and Arbors; Pipe Reamers; Taper Pins and Reamers; Brown & Sharpe, Morse and Jarno Taper Sockets and Reamers; Drills; Wire Gages; Milling Cutters; Setting Angles for Milling Teeth in End Mills and Angular Cutters, etc.

No. 5. Spur Gearing.—Diametral and Circular Pitch; Dimensions of Spur Gears; Tables of Pitch Diameters; Odontograph Tables; Rolling Mill Gearing; Strength of Spur Gears; Horsepower Transmitted by Cast-iron and Rawhide Pinions; Design of Spur Gears; Weight of Cast-iron Gears; Epicyclic Gearing.

No. 6. Bevel, Spiral and Worm Gearing.—Rules and Formulas for Bevel Gears; Strength of Bevel Gears; Design of Bevel Gears; Rules and Formulas for Spiral Gearing; Tables Facilitating Calculations; Diagram for Cutters for Spiral Gears; Rules and Formulas for Worm Gearing, etc.

No. 7. Shafting, Keys and Keyways.—Horsepower of Shafting; Diagrams and Tables for the Strength of Shafting; Forcing, Driving, Shrinking and Running Fits; Woodruff Keys; United States Navy Standard Keys; Gib Keys; Milling Keyways; Duplex Keys.

No. 8. Bearings, Couplings, Clutches, Crane Chain and Hooks.—Pillow Blocks; Babbitted Bearings; Ball and Roller Bearings; Clamp Couplings; Plate Couplings; Flange Couplings; Tooth Clutches; Crab Couplings; Cone Clutches; Universal Joints; Crane Chain; Chain Friction; Crane Hooks; Drum Scores.

No. 9. Springs, Slides and Machine Details.—Formulas and Tables for Spring Calculations; Machine Slides; Machine Handles and Levers; Collars; Hand Wheels; Pins and Cotters; Turn-buckles, etc.

No. 10. Motor Drive, Speeds and Feeds, Change Gearing, and Boring Bars.—Power required for Machine Tools; Cutting Speeds and Feeds for Carbon and High-speed Steel; Screw Machine Speeds and Feeds; Heat Treatment of High-speed Steel Tools; Taper Turning; Change Gearing for the Lathe; Boring Bars and Tools, etc.

No. 11. Milling Machine Indexing, Clamping Devices and Planer Jacks.—Tables for Milling Machine Indexing; Change Gears for Milling Spirals; Angles for setting Indexing Head when Milling Clutches; Jig Clamping Devices; Straps and Clamps; Planer Jacks.

No. 12. Pipe and Pipe Fittings.—Pipe Threads and Gages; Cast-iron Fittings; Bronze Fittings; Pipe Flanges; Pipe Bends; Pipe Clamps and Hangers; Dimensions of Pipe for Various Services, etc.

No. 13. Boilers and Chimneys.—Flue Spacing and Bracing for Boilers; Strength of Boiler Joints; Riveting; Boiler Setting; Chimneys.

No. 14. Locomotive and Railway Data.—Locomotive Boilers; Bearing Pressures for Locomotive Journals; Locomotive Classifications; Rail Sections; Frogs, Switches and Cross-overs; Tires; Tractive Force; Inertia of Trains; Brake Levers; Brake Rods, etc.

No. 15. Steam and Gas Engines.—Saturated Steam; Steam Pipe Sizes; Steam Engine Design; Volume of Cylinders; Stuffing Boxes; Setting Corliss Engine Valve Gears; Condenser and Air Pump Data; Horsepower of Gasoline Engines; Automobile Engine Crankshafts, etc.

No. 16. Mathematical Tables.—Squares of Mixed Numbers; Functions of Fractions; Circumference and Diameters of Circles; Tables for Spacing off Circles; Solution of Triangles; Formulas for Solving Regular Polygons; Geometrical Progression, etc.

No. 17. Mechanics and Strength of Materials.—Work; Energy; Centrifugal Force; Center of Gravity; Motion; Friction; Pendulum; Falling Bodies; Strength of Materials; Strength of Flat Plates; Ratio of Outside and Inside Radii of Thick Cylinders, etc.

No. 18. Beam Formulas and Structural Design.—Beam Formulas; Sectional Moduli of Structural Shapes; Beam Charts; Net Areas of Structural Angles; Rivet Spacing; Splices for Channels and I-beams; Stresses in Roof Trusses, etc.

No. 19. Belt, Rope and Chain Drives.—Dimensions of Pulleys; Weights of Pulleys; Horsepower of Belting; Belt Velocity; Angular Belt Drives; Horsepower transmitted by Ropes; Sheaves for Rope Drive; Bending Stresses in Wire Ropes; Sprockets for Link Chains; Formulas and Tables for Various Classes of Driving Chain.

No. 20. Wiring Diagrams, Heating and Ventilation, and Miscellaneous Tables.—Typical Motor Wiring Diagrams; Resistance of Round Copper Wire; Rubber Covered Cables; Current Densities for Various Contacts and Materials; Centrifugal Fan and Blower Capacities; Hot Water Main Capacities; Miscellaneous Tables; Decimal Equivalents, Metric Conversion Tables, Weights and Specific Gravity of Metals, Weights of Fillets, Drafting-room Conventions, etc.

MACHINERY, the monthly mechanical journal, originator of the Reference and Data Sheet Series, is published in four editions—the *Shop Edition*, $1.00 a year; the *Engineering Edition*, $2.00 a year; the *Railway Edition*, $2.00 a year, and the *Foreign Edition*, $3.00 a year.

The Industrial Press, Publishers of MACHINERY,

49-55 Lafayette Street, New York City, U. S. A.

9-55

PRICE 25 CENTS

MILLING FIXTURES

PRINCIPLES OF THEIR DESIGN AND EXAMPLES FROM PRACTICE

THIRD REVISED EDITION

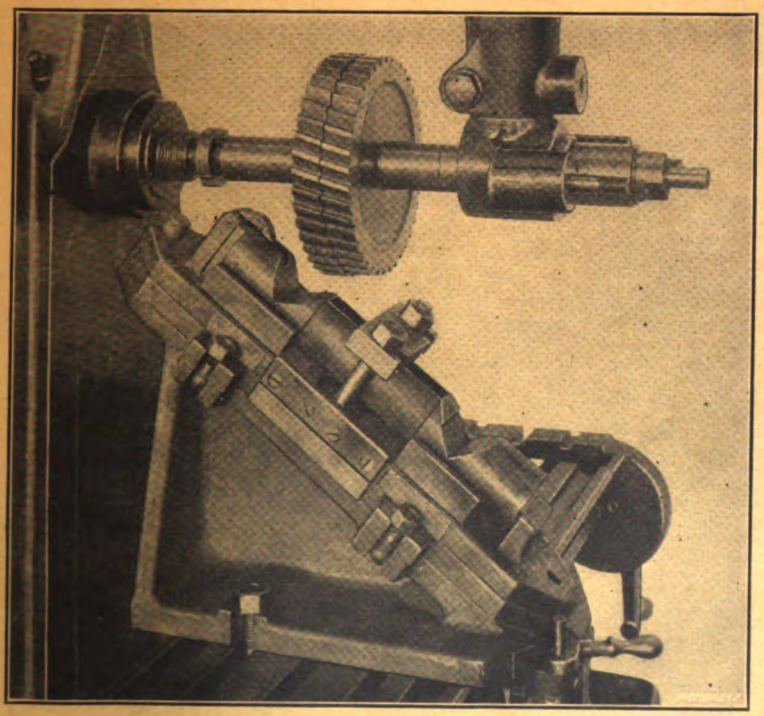

MACHINERY'S REFERENCE SERIES—NO. 4
PUBLISHED BY MACHINERY, NEW YORK

MACHINERY'S REFERENCE BOOKS

This treatise is one unit in a comprehensive Series of Reference books originated by MACHINERY, and including an indefinite number of compact units, each covering one subject thoroughly. The whole series comprises a complete working library of mechanical literature in which the Mechanical Engineer, the Master Mechanic, the Designer, the Machinist and Tool-maker will find the special information he wishes to secure, selected, carefully revised and condensed for him. The books are sold singly or in complete sets, as may be desired. The price of each book is 25 cents (one shilling) delivered anywhere in the world.

LIST OF REFERENCE BOOKS

No. 1. Worm Gearing.—Calculating Dimensions for Worm Gearing; Hobs for Worm Gears; Location of Pitch Circle; Self-Locking Worm Gearing, etc.

No. 2. Drafting-Room Practice.—Drafting-Room System; Tracing, Lettering and Mounting; Card Index Systems.

No. 3. Drill Jigs.—Elementary Principles of Drill Jigs; Drilling Jig Plates; Examples of Drill Jigs; Jig Bushings; Using Jigs to Best Advantage.

No. 4. Milling Fixtures.—Elementary Principles of Milling Fixtures; Collection of Examples of Milling Fixture Design, from practice.

No. 5. First Principles of Theoretical Mechanics.

No. 6. Punch and Die Work.—Principles of Punch and Die Work; Suggestions for the Making and Use of Dies; Examples of Die and Punch Design.

No. 7. Lathe and Planer Tools.—Cutting Tools for Planer and Lathe; Boring Tools; Shape of Standard Shop Tools; Forming Tools.

No. 8. Working Drawings and Drafting-Room Kinks.

No. 9. Designing and Cutting Cams.—Drafting of Cams; Cam Curves; Cam Design and Cam Cutting; Suggestions in Cam Making.

No. 10. Examples of Machine Shop Practice.—Cutting Bevel Gears with Rotary Cutters; Making a Worm-Gear; Spindle Construction.

No. 11. Bearings.—Design of Bearings; Causes of Hot Bearings; Alloys for Bearings; Friction and Lubrication; Friction of Roller Bearings.

No. 12. Mathematics of Machine Design.—Compiled with special reference to shafting and efficiency of hoisting machinery.

No. 13. Blanking Dies.—Making Blanking Dies; Blanking and Piercing Dies; Construction of Split Dies; Novel Ideas in Die Making.

No. 14. Details of Machine Tool Design.—Cone Pulleys and Belts; Strength of Countershafts; Tumbler Gear Design; Faults of Iron Castings.

No. 15. Spur Gearing.—Dimensions; Design; Strength; Durability.

No. 16. Machine Tool Drives.—Speeds and Feeds of Machine Tools; Geared or Single Pulley Drives; Drives for High Speed Cutting Tools.

No. 17. Strength of Cylinders—Formulas, Charts, and Diagrams.

No. 18. Shop Arithmetic for the Machinist.—Tapers; Change Gears; Cutting Speeds; Feeds; Indexing; Gearing for Cutting Spirals; Angles.

No. 19. Use of Formulas in Mechanics.—With numerous applications.

No. 20. Spiral Gearing.—Rules, Formulas, and Diagrams, etc.

No. 21. Measuring Tools.—History and Development of Standard Measurements; Special Calipers; Compasses; Micrometer Tools; Protractors, etc.

No. 22. Calculation of Elements of Machine Design.—Factor of Safety; Strength of Bolts; Riveted Joints; Keys and Keyways; Toggle-joints.

No. 23. Theory of Crane Design.—Jib Cranes; Calculation of Shaft, Gears, and Bearings; Force Required to Move Crane Trolleys; Pillar Cranes.

No. 24. Examples of Calculating Designs.—Charts in Designing; Punch and Riveter Frames; Shear Frames; Billet and Bar Passes; etc.

No. 25. Deep Hole Drilling.—Methods of Drilling; Construction of Drills.

No. 26. Modern Punch and Die Construction.—Construction and Use of Subpress Dies; Modern Blanking Die Construction; Drawing and Forming Dies.

No. 27. Locomotive Design, Part I.—Boilers, Cylinders, Pipes and Pistons.

No. 28. Locomotive Design, Part II.—Stephenson Valve Motion; Theory, Calculation and Design of Valve Motion; The Walschaerts Valve Motion.

No. 29. Locomotive Design, Part III.—Smokebox; Exhaust Pipe; Frames; Cross-heads; Guide Bars; Connecting-rods; Crank-pins; Axles; Driving-wheels.

No. 30. Locomotive Design, Part IV.—Springs, Trucks, Cab and Tender.

No. 31. Screw Thread Tools and Gages.

No. 32. Screw Thread Cutting.—Lathe Change Gears; Thread Tools; Kinks.

No. 33. Systems and Practice of the Drafting-Room.

No. 34. Care and Repair of Dynamos and Motors.

No. 35. Tables and Formulas for Shop and Drafting-Room.—The Use of Formulas; Solution of Triangles; Strength of Materials; Gearing; Screw Threads; Tap Drills; Drill Sizes; Tapers; Keys; Jig Bushings, etc.

No. 36. Iron and Steel.—Principles of Manufacture and Treatment.

No. 37. Bevel Gearing.—Rules and Formulas; Examples of Calculation; Tooth Outlines; Strength and Durability; Design; Methods of Cutting Teeth.

No. 38. Grinding and Grinding Machines.

(See inside back cover for additional titles)

MACHINERY'S REFERENCE SERIES

EACH NUMBER IS ONE UNIT IN A COMPLETE LIBRARY OF MACHINE DESIGN AND SHOP PRACTICE REVISED AND REPUBLISHED FROM MACHINERY

NUMBER 4

MILLING FIXTURES

THIRD REVISED EDITION

CONTENTS

Elementary Principles of Milling Fixtures, by E. R. MARKHAM - - - - - - - - - - - 3

Examples of Milling Fixtures - - - - - - 26

Copyright, 1912, The Industrial Press, Publishers of MACHINERY
49-55 Lafayette Street, New York City

CHAPTER I

ELEMENTARY PRINCIPLES OF MILLING MACHINE FIXTURES*

The principal consideration, when designing fixtures that are to be fastened solidly to the table of a milling machine, should be to have the fixture firm enough to admit working the machine and cutter to their limit of endurance. In fact, the fixture should be stronger than the machine itself, and able to resist any possible strain that the cutter can exert. While fixtures should be strong, the movable parts should be so made as to be easily manipulated. All bearing and locating points should be accessible to facilitate the removal of chips and dirt. The action of the clamping devices should be rapid, so that no time is lost in manipulating them.

The Milling Machine Vise—False Vise Jaws

The first fixture to consider is the milling machine vise, which has a stationary and a movable jaw, against which are placed removable jaws, held in place by means of screws. The stationary-removable jaw generally has connected with it any shelf, pins, or means for locating the pieces to be machined. The reason for attaching them to this jaw is that this portion of the vise is not movable, and is, or should be, stiff enough to resist without springing any pressure that may be exerted by means of the crank and screw. The jaw attached to the movable slide part of the vise, on the contrary, is liable to alter its location slightly under strain, especially when the vise becomes worn.

For some purposes, where but a few pieces are to be milled, or where the character of the pieces is such that there is not much liability of the jaws wearing, and thus affecting the accuracy of the pieces, it is safe to make the jaws of cast iron. If, however, there is a considerable strain on the jaws, it is advisable to make them of steel and harden them. For most purposes, jaws made of a good grade of machinery steel and properly case-hardened answer as well as those made from tool steel, and cost only a fraction as much for stock.

If possible, the piece to be machined should be held in the jaws below the level of the top of the vise in order to avoid springing the jaws out of a vertical position, as would be the case if the piece were above the level of the top of the vise. Occasionally pieces are so shaped, however, that they have to project considerably above the top of the vise jaws, in which case the jaws may be made with a rib which extends over the top of the vise and rests on the piece, as shown in Fig. 1. This furnishes a brace and prevents the springing that would prove harmful to almost any piece of work that it would be safe to

* MACHINERY, November, 1905; December, 1905; January, 1906; and February, 1906.

hold in a vise while milling. As it would prove quite expensive if many jaws of this style were made from steel, they may be made from cast iron, and a plate of steel placed where the work is to rest, as shown at *a*, Fig. 1. After the steel plate has been cut to shape and the locating device attached, the jaw may be hardened. If the devices mentioned are pieces which must be attached to the jaw, or pins which enter holes in it, they must be removed when the jaw is hardened.

At times it is necessary to hold pieces so that they rest on shelves on each jaw, or are located by pins in both the stationary and movable jaw. Generally speaking, it is advisable to construct special fixtures for such pieces, provided the degree of accuracy and the number of pieces warrant the outlay. However, if the pieces must be held in

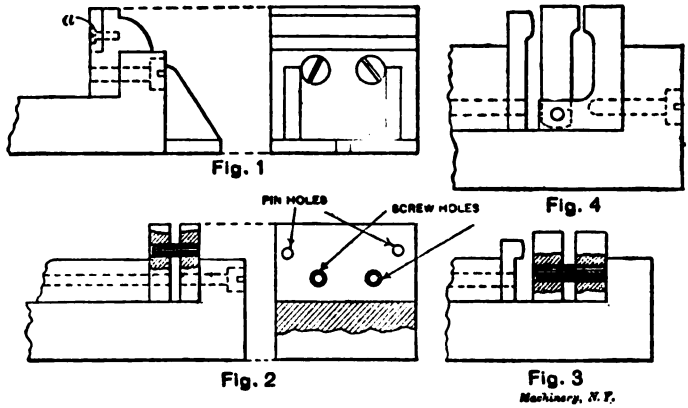

Figs. 1 to 4. Special Jaws for Milling Machine Vise

jaws in the vise, some method should be found to prevent the movable jaw from rising when pressure is applied, in the operation of "tightening up." If the jaws are reasonably thick, large pins may be used, one near each end of the jaw, as shown in Fig. 2. These pins must be forced solidly into one jaw and fit closely in the other. Another method which works nicely is shown in Fig. 3. In this case the movable jaw proper is connected with the stationary jaw by means of pins, or a slide of different design. It is not, however, attached to the movable slide of the vise, but a hardened piece of steel is attached to this and bears against the movable part of the jaw. Many other forms are made, one of which is shown in Fig. 4. The front portion hinges at the bottom, and is pressed against the work by a movable slide. In all such holding devices, however, chips are liable to get between the various parts, decreasing their accuracy.

When making any form of holding device, it is necessary to provide a place for the burrs that are a result of previous operations, unless they are removed by a process of filing or grinding. In many cases these burrs will be removed by future operations if it is possible to provide a place for them so that they will in no way affect the accuracy

of the piece. For this reason milling machine jaws and other fixtures are cut away or recessed in places to allow the burrs a place in which to drop, as shown in Fig. 5 at *A*. At *B* a piece of work is shown with the burr mentioned.

Provisions for Removing Chips

It is the custom in most shops to provide a liberal supply of oil, or other lubricant, for cutters when milling work that requires lubrication. In many cases this fluid is used to wash out the jaws or fixtures after removing a piece of work. As this supply is used over and over, however, it is liable to become thick and gummy, and apt to prove harmful rather than helpful, unless the operator watches his fixtures closely. In some shops compressed air is used to blow chips from the working surface, and in many cases "works like a charm." On certain jobs nothing seems so effective as the hand and finger method for cleaning the surfaces of the fixtures.

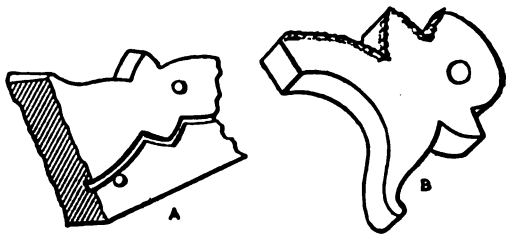

Machinery, N.Y.

Fig. 5. Arrangement of Fixture or Vise Jaw to Accommodate Burr

One example of the necessity of taking account of the question of chips, taken from actual practice, may give this matter its full emphasis. This example also shows how at times it is necessary to change existing methods in order to accomplish the desired result. A piece of work consisting of a flange, as shown in Fig. 6, was provided with projecting portions, *a a*, which were to be straddle-milled. The jaws of the vise used to hold this piece had circular grooves, *b b*, Fig. 7, which were thought necessary to properly hold the piece, since the pull of the cutters was in an upward direction; but these grooves made an excellent place for a deposit of chips, and as it was a difficult matter to clean them, and as the operator was working by the piece at a rather low rate, and consequently was not inclined to take too great precautions, the edges of the flanges of the piece being milled became badly scored, and required an extra operation in the turret lathe to remove the marks. To overcome this difficulty, the projecting lips of the vise jaws were cut away and the direction of rotation of the cutters reversed, the overhead belt being changed so that the cutters would run onto the work, thus holding the work securely down on the seating surface of the jaws.

Special Forms of Vise Jaws

It sometimes happens that the opening in the vise is not sufficient to take in a long piece of work, in which case the jaws may be made

of a form shown in Fig. 8. At other times the vise may be used with the movable jaw of the original form, and with the stationary jaw arranged as in Fig. 9. In this case a flat piece of steel is attached to the outside of the jaw by means of screws which are a snug fit in holes drilled and reamed in both the auxiliary and stationary jaws of the vise. It is apparent that such an arrangement does not allow great accuracy, as the jaw on the end has no backing, and consequently will easily spring, yet there are instances where it answers the purpose as well as a costly fixture. If milling machine vises are drilled for screws that hold jaws in such a manner that the jaws will readily go on any vise, much valuable time may be saved. If we are equip-

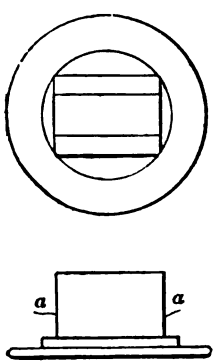

Fig. 6. A Difficult Straddle Milling Job

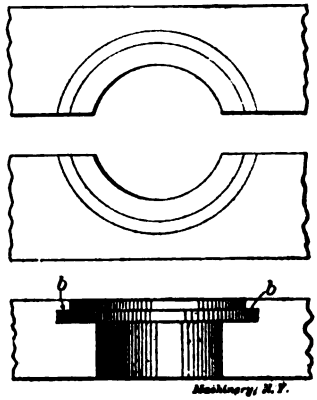

Fig. 7. Arrangement of Vise Jaws to Hold Piece Shown in Fig. 6

ping a shop with new machines, this may be readily accomplished, as we may order vises drilled alike and corresponding with some vise already in use, and to which a number of pairs of jaws are fitted.

Cams or Eccentrics for Binding Vise Jaws

The vises ordinarily furnished with milling machines are opened and closed by means of a screw. Unless it is necessary to apply considerable pressure to the piece being held, this form of vise will not work as quickly as desirable where cheapness of production is a factor. To overcome this objection, vises are made so that the slide may be opened and closed by means of a cam and lever, and unless there is much variation in the sizes of pieces being machined, the cam will cause the work to be held sufficiently firm. The work may be placed in and taken out in this way much more quickly than when a vise operated by a screw is used. In fact, where such a vise will answer the purpose, it will be found as cheap to operate and as satisfactory in results as special fixtures; and the jaws necessary when starting a new job are, as a rule, much cheaper than special fixtures.

When it is necessary to cut in the vise jaws the shape of the piece to be milled, it may be done by milling with the mills to be used on the work, as shown in Fig. 10. The pins, or other appliances for hold-

ing the work, should be added, and are then again removed and the jaws hardened.

Hardening Vise Jaws

While, as mentioned, such parts of tools as milling machine jaws are ordinarily made from machinery steel, open-hearth steel which does not contain over 25 or 30 points carbon is to be preferred. This may be case-hardened nicely in oil with little or no liability of springing, as the depth of hardness necessary does not call for extreme heat, which causes the steel to go out of shape and also opens the grain of the steel and renders it more liable to become indented should a chip be pressed against the surface. The jaws, if made of this kind of steel, may be packed in the hardening box with a mixture of charred bone and wood charcoal—equal quantities—and run five or six hours after they are red hot. Then they may be removed and dipped in a bath of oil, working them up and down lengthwise in the oil until the red has entirely disappeared, after which they may be lowered to the bottom of the tank and allowed to remain until cold.

If for any reason it is necessary to harden the piece deeper than can be done in the length of time mentioned above, then the red-hot

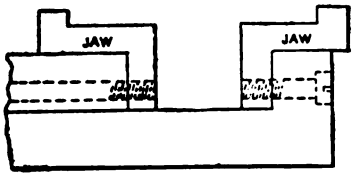

Fig. 8. Off-set Vise Jaws

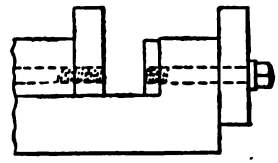

Machinery, N.Y.

Fig. 9. Extended Vise Jaw

jaws may be exposed to the action of the carbonaceous material for a greater length of time. If the jaws are made from the grade of stock mentioned, and are given a low heat, there should be no springing during the hardening process.

Regular Milling Fixtures

There are many pieces of work that can be machined at a much less cost if a fixture specially designed for the purpose is used. When the number of pieces to be done warrants the outlay, it is generally advisable to pursue this policy. There are other pieces of work that must be held in specially designed fixtures in order to produce a sufficient degree of accuracy, and there are still others that cannot be machined unless such fixtures are provided. The design of such fixtures should always depend on the number of pieces to be machined, and the cost of doing the work. If a fixture is to be used for machining a relatively small number of pieces, then it should be made at as small a cost as possible. If, on the contrary, it is to be used as a permanent fixture for machining the same class of work for an indefinite period, then it should be made in a manner to insure its "standing the racket." Such fixtures should be made very strong and solid, as the cost for stock and labor is not much greater than when making a too light, more or less useless contrivance.

As cast iron is the material used for the base of most fixtures of this kind, plenty of the material rightly distributed will insure freedom from chattering and uniformity of the product, provided other conditions are right. This additional weight of cast iron does not materially add to the cost of the fixture. As a rule, cast iron does not prove satisfactory as a surface against which to bed small pieces when

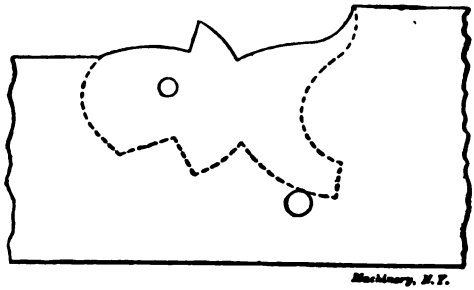

Fig. 10. Vise Jaw made to Correspond to Shape of Work

milling, and for this reason a surface of steel is generally provided for this purpose.

Examples from Actual Experience

Fig. 11 shows a milling machine fixture used for milling a leaf for a vernier rifle sight. It is necessary to have the sides, *a a*, of the leaf parallel to the sides of the slot. The base, *b*, of the fixture is made of cast iron, the bottom of which is planed flat. It has a slot cut in it to receive the tongue pieces which fit the tongue slot in the table. A groove is cut in the top surface to receive a tongue on the steel por-

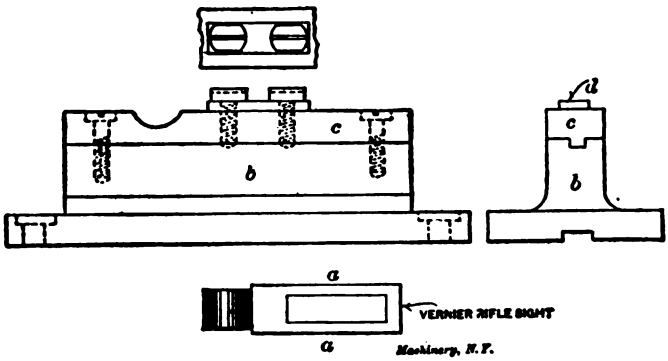

Fig. 11. Fixture for Milling Rifle Sight

tion, *c*. This is attached to the base by means of screws, after which the projection *d*, for the rifle sight, is milled in the machine used. This insures perfect alignment between the sides of the tongue, *d*, and the table travel, and in consequence the sides of the leaf are exactly parallel to the walls of the slot when the pieces are milled. In the

case of this particular piece of work it was found necessary to provide a somewhat complicated contrivance to hold the leaf down onto the fixture while milling, as the cut was rather heavy, compared with the strength of the sides of the leaf. But it was suggested that by reversing the cutters and running them down onto the work, rather than against it, the cutters would be made to hold the work down on the seating surface rather than to tend to raise it. All that was needed then was two screws, the heads of which screwed down onto the leaf. To release the leaf it was necessary to give the screw but a quarter turn, as the opposite sides were cut away to a width a trifle less than

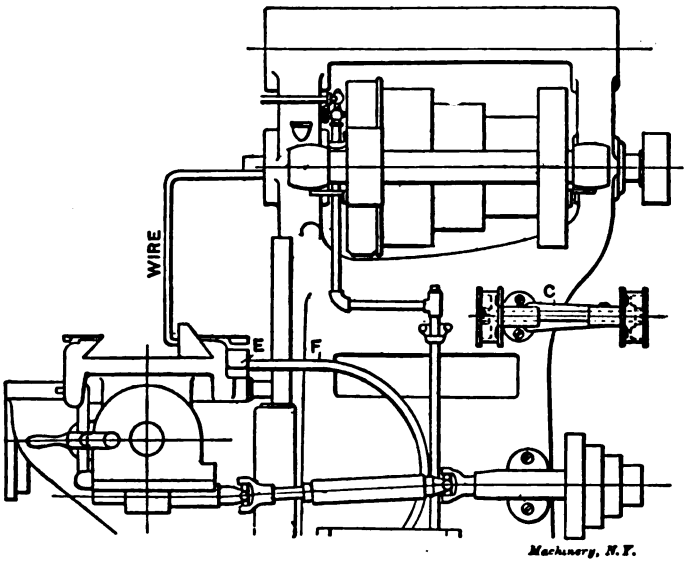

Fig. 12. Testing the Alignment of the Milling Machine Saddle

the width of the slot in the leaf. The only reason it was necessary to provide the screws was that at the ends of the cut the pressure of the cutters tended to tip the leaf.

Alignment of the Milling Machine Table

In order to produce good work when straddle-milling on a single-spindle milling machine, it is necessary to have the table travel exactly at right angles to the axis of the spindle. Should it not do so, it will be necessary to either scrape the saddle or swivel the head to get the alignment. The Lincoln type of miller usually has provision for the latter adjustment, but if not, and the saddle must be scraped, it is better to scrape the sliding surfaces which bear against the bed, instead of the table slides, unless the latter should be so badly worn as to need scraping.

The alignment of the saddle of a milling machine may be tested by means of a piece of wire attached to the spindle, as in Fig. 12.

In this case the bearing surface to be tested is on a bevel, instead of standing vertical, and therefore a cast iron block is planed to fit the angle portion, the block having a vertical surface for the point of the wire to bear against.

Principle of Gang Fixtures

Fixtures are many times made to hold two or more pieces of work to be machined at the same time, thus increasing the efficiency of the machine. Fig. 13 represents a fixture used in milling a bolt head flat on opposite sides. The fixture is designed to do away with any inaccuracy that might result from an attempt to mill bolts whose bodies were of varying sizes. For this reason the grooves for holding the bolts are made V-shaped instead of circular. The fixture is so designed as to allow the strain incident to cutting to come against the solid part of the fixture. To insure ease of manipulation, the cam levers, used in clamping the pieces in the fixture, are located in the portion of fixture nearest the operator. Were they located on the

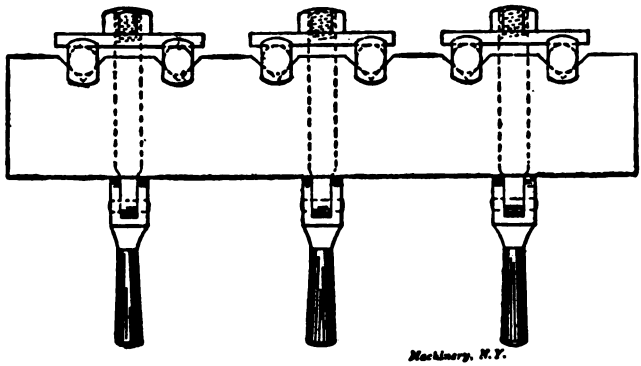

Fig. 13. Fixture for Milling Bolt Heads

opposite side it would be necessary to run the table back far enough to get the cam levers away from the cutters, so as not to endanger the operator's hands. Then again, if located nearer the cutters, they would be covered with chips, thus rendering it necessary to clean them every time before handling. The designer should always have in mind the safety of the operator, not only from a humanitarian standpoint, but also because accidents caused through poorly constructed tools and appliances are extremely costly to the manufacturing concern in whose shops they happen.

Prevention of Springing Action in Fixtures

It is generally the best practice to have the device used in binding the piece of work to the fixture connected with that part which holds the work, as shown in Fig. 14. If this plan is adopted there is no danger of springing the fixture and thus producing work which is not uniform to gage, as might happen if the design shown in Fig. 15 were used. If the fixture is extremely heavy and there is a certain amount of error allowable in the gaging, the objection to the method shown in

Fig. 15 would not be readily apparent. However, for accurate work it is advisable, when possible, to adopt the method shown in Fig. 14, for it is possible to spring fixtures which are apparently quite strong.

If a fixture is to be made in the form of an angle iron and considerable strain is to be exerted by the operation of cutting, the upright

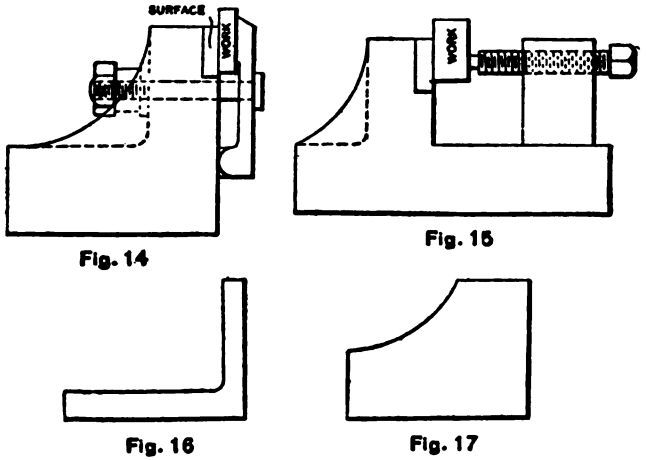

Fig. 14 Fig. 15

Fig. 16 Fig. 17

Figs. 14 to 17. Preventing Springing Action in Vises and Fixtures

portion of fixture should be made heavy, so as to absorb vibration, and it should be well braced on the back to prevent any tendency to yield under the strain. If such a fixture were made as shown in Fig. 16, the piece of work being machined would be chatter-marked from the vibration, and out of true from the yielding of the fixture. If it were made as shown in Fig. 17 neither of these troubles would be experienced,

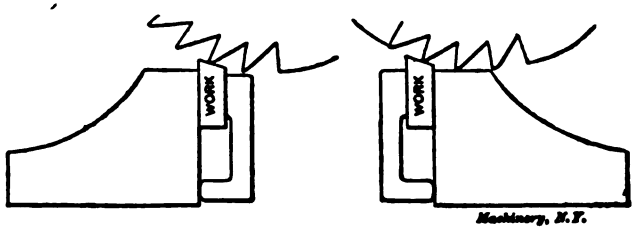

Machinery, N.Y.

Fig. 18 Fig. 19

Proper and Improper Direction of Cut

provided other conditions were right. When possible, the pressure of the cutter should always be against the solid part of the fixture, as shown in Fig. 18, rather than against the holding device, as in Fig. 19. One thing that is sometimes overlooked is the inability of the cutter arbor to do the work without springing. Many times cutters are made with holes so small that the arbor cannot transmit the power without springing. If arbors are made for a special job and are to be subjected to great strain, they should be as short as possible.

Fundamental Principles of Milling Fixture Design

The simplest fixture that will hold the work in a satisfactory manner is, as a rule, the most satisfactory, to say nothing of its lower cost. It is necessary at times, in order to accomplish a certain purpose, to make a complicated fixture, but the more complicated such a tool is, the greater the probability of its getting out of alignment and out of working condition. There is a tendency on the part of many young designers to make elaborate fixtures, not realizing that true success in this branch of business depends on making all machines and tools in the simplest way possible. To be sure, most of the automatic machinery on the market is very complex in design, but the designer uses every effort to simplify where possible, and still have it accomplish the desired result.

While it is absolutely necessary that milling machine fixtures be made in a manner that insures the desired degree of accuracy, yet they should be so designed that the work may be placed in and taken out in the shortest space of time possible, since this item adds very

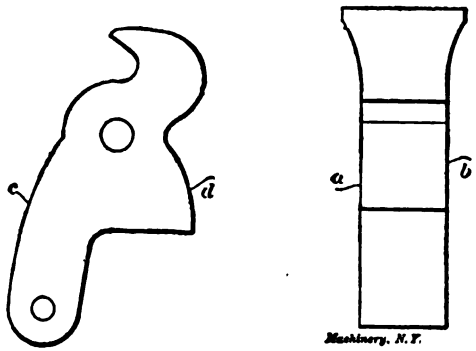

Fig. 20. Drop Forged Jaw, Finished by Milling

materially to the cost of the article. As it is customary to have the operator run several machines, the greater the length of time necessary to devote to one machine, the fewer machines he can tend.

So far as possible the design should be worked out by always working to, or by, a given surface, or other working point, and in making the fixture the same principle should be adhered to. It is poor practice to change and work from a different working surface unless compelled to do so, as any slight inaccuracy, that in itself might be of little consequence, might affect other vital portions. This same principle should apply to all machining operations.

Examples of Practical Applications

As an example of what has just been said, let us consider the cutting plier jaw shown in Fig. 20. This jaw was first forged to shape from tool steel under a drop hammer. The side marked *a* was milled first, after which the opposite side was milled. Unless great care were taken when seating in the jaws, the second side milled would not be

parallel with the first. Now, this would not materially affect the finished jaw if one particular side were selected and worked to throughout the various milling operations. The surface *a* was selected as the working surface and was the one placed against the working surface of the drill jig. Then, under normal conditions, the drilled holes would be square with the surface worked from. The same side was also placed against the stationary jaw in the milling machine vise when milling the surfaces *c* and *d*. Then, if the jaws were properly made and set in the vise and reasonable care taken to prevent the presence of chips and dirt, the surfaces *c* and *d* would be square with *a*.

A simple method to use when it is required to mill a block perfectly square is to first straddle-mill two sides by holding the block in the jaws of a milling machine vise. The other sides are straddle-milled by holding the piece in the simple fixture shown in Fig. 21, so designed

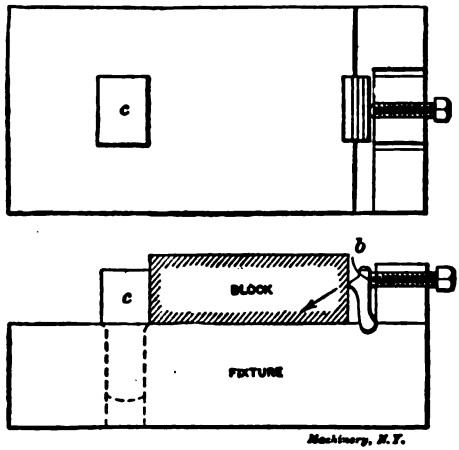

Fig. 21. Fixture for Straddle Milling

that when the piece is fastened in the fixture, the tendency of the tightening device is to draw one of the sides that were milled at the first operation down onto the seating surface of the milling fixture as shown in Fig. 21. The tilting block *b*, bearing at the bottom, acts in such a manner that when pressure is applied with the screw it forces the work down on the seating surface of the fixture, and against the upright. It might be found necessary when starting to use a fixture of this description to block up under one edge with paper to bring the milled surfaces square with the seating surface, as the spindle and table of the machine might not stand exactly parallel. This must be ascertained by experiment. The parallelism of the two may be tested with a height indicator of the description shown in Fig. 22. However, if it is found necessary to raise or lower the machine the table may not stand in exactly the same relation to the arbor as before moving. Then, again, the arbor may not be exactly true. All these things must be taken into account when testing machines for alignment.

Milling a Bicycle Hub

Fig. 23 shows a bicycle hub having projections. Through these projections, or ears, are drilled holes to receive the spokes. The equipment of milling machines in the shop where these hubs were to be milled was not sufficient to turn out the required number of pieces, and as it was not deemed wise to increase the equipment, ways were

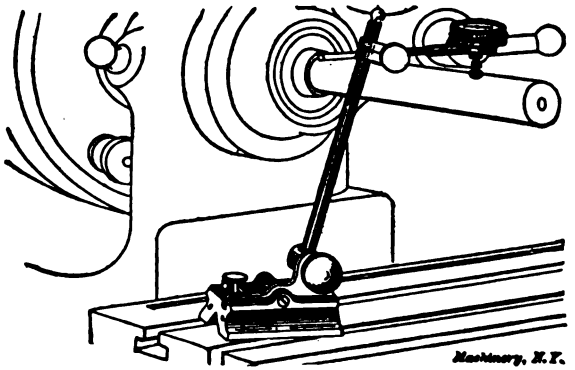

Fig. 22. Testing the Parallelism of Table and Spindle

devised of doing the additional amount of work on the machines on hand. In order to accomplish this task, it was found necessary to make multiple fixtures.

Two fixtures were made to go side by side on a plate, each fixture to hold a hub. A dog was attached to one end of the hub, the tail of the

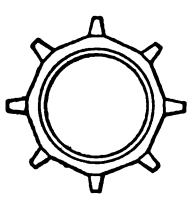

Fig. 23. Bicycle Hub

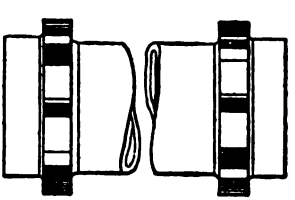

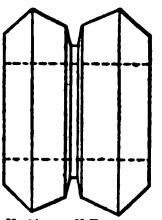

Fig. 24

dog entering an opening in the plate on the nose of the fixture spindle. On the other end of the spindle was an index plate having around its circumference a number of holes equidistantly spaced, the number of which corresponded with the number of teeth to be milled on the hub. A hardened steel pin entered these holes and thus located the hub. In making fixtures of this character where fine chips can get into the holes, it is advisable to make locating holes straight rather than tapering, since when the holes are tapering there is a strong probability of fine particles getting in the holes on one side of the pin, thus causing the work to be unevenly spaced; but where the hole and pin are straight, if the pin enters the hole, it must necessarily locate

the spindle properly. If the holes and pins are properly ground and lapped, they will retain their size for a long time. In order to facilitate the pin entering the hole the end should be chamfered somewhat.

When milling the job shown in Fig. 23, it occurred to the operator that not only could two hubs be milled at a time, but one could also make each cutter able to mill the spaces between two teeth each time, making a cutter of the form shown in Fig. 24. This shows how fixtures and methods are the results of gradual development, and almost any operation, however well planned, can almost always be still further improved upon.

Milling a Tapered Square End on an Axle or Tool

In Fig. 25 is shown a fixture used to mill a square on the end of an axle, but with the four sides on a slight taper with the axis of the

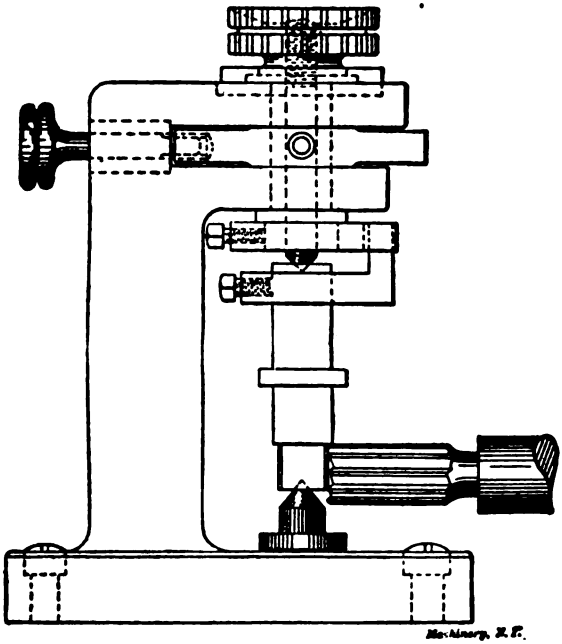

Fig. 25. Fixture for Squaring End of Axle

axle. On this account it was necessary to use an end mill rather than a face mill, and in order to use an end mill in the ordinary milling machine, the fixture must hold the axle in a vertical position and with the axle standing at the right angle to produce the proper taper. It was found to be impossible to drill the spacing holes in the indexing dial of the fixture with sufficient accuracy by holding it between the centers of the dividing head when the holes were drilled on the universal milling machine, and it was necessary to resort to another scheme. A disk about six inches in diameter was placed between the centers of the universal milling machine, and by means of an end mill

was squared. When tested with a square, it was found that the sides were not exactly square with each other, however, and they were carefully scraped until they were as square as it seemed possible to get them. The disk was then placed on a stud located on an angle plate attached to the face-plate of a lathe. The indexing dial to be drilled was then fastened to the squared disk, and after locating one side of the latter parallel with the face-plate, a hole was drilled and bored in the dial at the proper location, after which the stud was

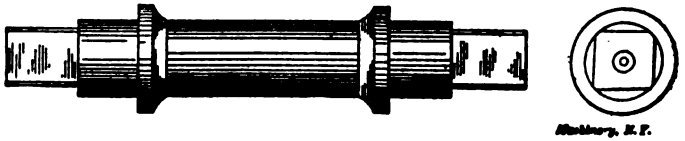

Fig. 26. Axle Milled in Fixture Shown in Fig. 25

turned so the next side of the squared piece was parallel with the face-plate. By continuing this method, four holes were drilled and bored that were equidistant from each other. These holes were bushed with hardened steel bushings, ground inside and outside, and then forced into the holes. Pieces milled on this fixture, and which were located by this dial, were found so nearly square that no error could be detected when tested with a square. Fig. 26 represents the axle whose ends were milled.

In the previous examples an attempt has been made to avoid using complicated fixtures in illustrating the various methods of doing work, as they would be more confusing, and the simple fixtures illustrate the

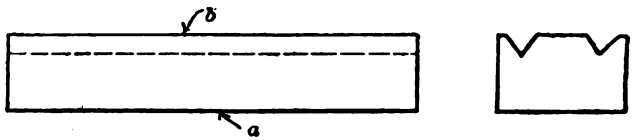

Fig. 27. Casting to be Milled in Fixture shown in Fig. 28

methods involved as well. There are certain principles which must be observed in designing fixtures of this character. These can be more plainly illustrated when simple fixtures are shown, but the designer may elaborate as much as is necessary to produce a tool adapted to the work in hand.

Fixtures with Adjustable Supports

We often have to mill articles of cast iron or other metals which are not uniform in size or shape, and which would not locate alike in any fixture, without means of compensation for the irregularities. It has been noticed that columns of milling machines, which weighed 400 or 500 pounds, have sprung out of true when on the planer table by tightening a holding bolt, when the wrench used was an ordinary 6-inch wrench, apparently applied with small force. To secure a good job, it is therefore necessary to block under the work very carefully, and then fasten it securely for the roughing cut; and for the finish cuts the strains on the clamp have to be removed entirely, or nearly so.

... use the machine either way, as required. ... when machining by this method will not ... already described. There are several ... horizontal milling for many classes of ... one is that the surface being milled is ... in the vertical machine, being turned

Machinery, N. Y.

Fig. 37. Bridge Milling Cut on a Bicycle Crank

... horizontal, where it would have to be turned ... in order to permit the milling operation to be

... centrics for Binding Work in Fixtures

... vises and special fixtures in a variety of ways ... means of binding the work in place. At times ... made on the end of a piece as shown in Fig. 37. ... considerable length of movement to the slide of ... may be made on a piece having a turned projection ... which fits in a hole in the base of the fixture. ... turned sufficiently to relieve the pressure against

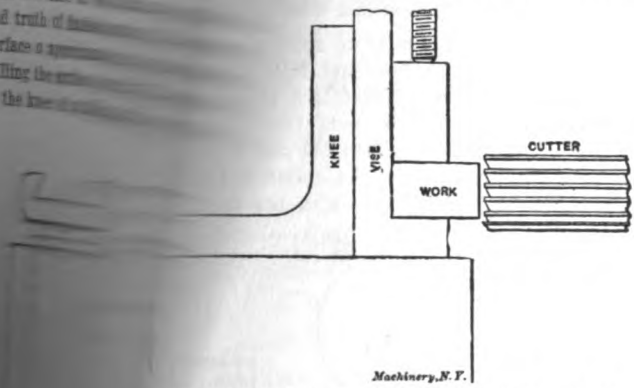

Fig. 36. End Milling on Horizontal Milling Machine

... the cam may be lifted from the fixture and the slide ... such as is necessary. After placing another piece of work ... re, the slide may be moved against it, the projection on the ... d in the hole, and the necessary pressure applied by turn- ... n.

... shows a cam which is round in form and has a round pro- ... hich enters a hole in the fixture. This smaller projection ... c with the larger, in which a hole is drilled and a lever ... shown. This, like the previous form, may be made remov- ... ired. Cams of various designs may be employed for holding ... particular design depending on the piece to be held.

above remarks are applied directly to the milling of a milling machine knee, they are equally applicable to any piece of work that must be true, and whose shape or material renders it liable to spring as a result of some machine operation.

There are jobs which require a number of cuts on one side and which must be of a certain *uniform* depth from a given surface. If the pieces are of a uniform thickness they may be held in the usual manner, by having the under side of the piece bear against the seating

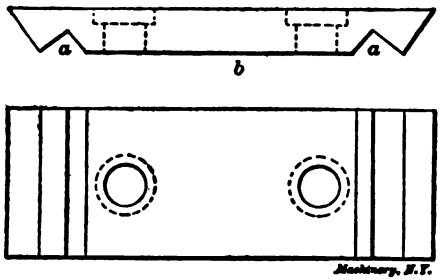

Fig. 30. Work Milled in Fixture shown in Fig. 31

surface of the fixture and the cuts taken on the upper side. If, however, the pieces are not of a uniform thickness, and the cuts must be of an exact depth, some other method of holding must be employed. Fig. 30 represents a cap used for holding a traveling carriage in place on a knitting machine. The V-groove *a a* must be given depth from the surface *b*, and owing to certain conditions it is not practicable to mill that surface at the time the grooves are milled. The distances from the screw holes must also be equal.

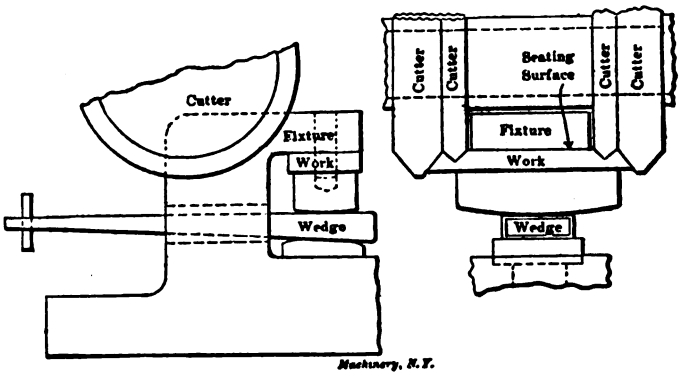

Fig. 31. Fixture for Holding the Piece Shown in Fig. 30, while Milling

A fixture of the design shown in Fig. 31 was made to hold the cap when milling the V-slots and bevel on ends. It will be observed that it is an inverted fixture and that the surface *b* of the cap, which has been previously milled, rests against an under surface of the fixture. Pins which fit the screw holes in the cap project from the seating surface of the fixture and enter these holes, thus properly locating the cap,

which is securely held against the seating surface by means of a wedge. Between the wedge and cap is placed a block, as shown. When the wedge is driven forward, the block may be removed and the cap taken from the fixture. The pin at the thin edge of the wedge prevents the wedge from being driven entirely out of the fixture.

At times when fixtures of the character mentioned are to be used, it is wise to make them of the style shown in Fig. 32, the cutters being beneath the fixture. In this case, the seating surface being uppermost, it is more easily cleaned than when the fixture shown in Fig. 31 is used.

Bridge Milling

A method of milling a certain class of work which is not used so extensively as it was a number of years ago, and which is entirely unknown to many mechanics, is known as bridge milling. In some shops work is done on profiling machines which might be done in a satisfactory manner by this method and at a fraction of the cost. The desired shape is produced by means of a form, *A*, which is securely

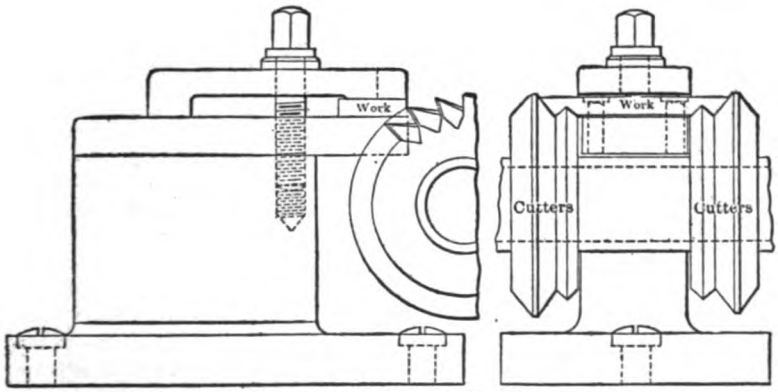

Fig. 32. Another Fixture for Holding the Work Shown in Fig. 30

fastened to the movable leaf, *B*, of the fixture, as shown in Fig. 33. This leaf is swung between two uprights, *C C*, by means of a heavy steel pin. The base of the uprights is securely fastened to the table of the milling machine by screws. To each side of the saddle, and directly opposite each other, are fastened posts, *D D*, which support the bridge, *E*, reaching across the table. The lower side of the bridge should be but a trifle above the table, say 0.001 inch, so that the table of the machine may prevent it from springing more than that amount when pressure is exerted by the operation of cutting. In the surface of the bridge is cut a slot to receive a hardened steel piece, *K K*, which, being narrow at the top, allows the movable leaf to move in conformity to the shape of form fastened to its under side.

Fixtures of this character may be used many times for milling a number of pieces at once. As an example may be mentioned a fixture for milling the legs of machinists' calipers. These are milled from pieces of square machinery steel to the shape shown in Fig. 34, where

a represents the piece of mild steel cut to length; *b*, after one side is milled to shape; and *c*, after both sides have been milled. Eight pairs of legs are milled at a time, and at a fraction of the cost of drop forgings.

Fig. 35 shows a case of bridge milling the flat portion at the end of a bicycle crank. As in the case of the caliper legs, a double fixture is used and six pairs of cranks milled at a time, milling the right-

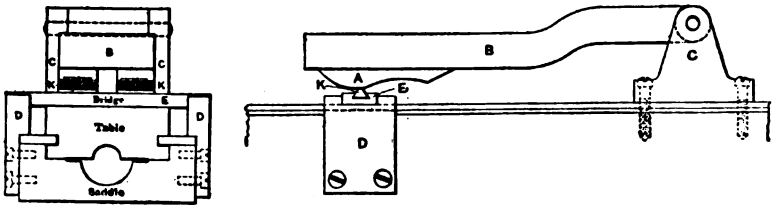

Fig. 33. Principle of Bridge Milling Fixture

hand crank in one fixture and the left-hand in the other. These are located side by side on the same machine. On account of the unequal quantity of stock removed at the various portions, a slight inaccuracy can be observed, but this is corrected by running the cutters across the work twice at the same setting of the pieces.

In these two examples of bridge milling cited, the milling was done with straight cutters, whose teeth were cut spirally, the helix being right-hand on one cutter and left-hand on the other, to do away with the thrust incidental to long interlocked spiral mills where the teeth of several cutters are of the same hand helix.

Vertical Spindle Milling

When surfaces are to be machined flat it will be found more satisfactory and quicker, in many cases, to use an end mill of the proper design. The work may be held in a special vise or in an ordinary vise

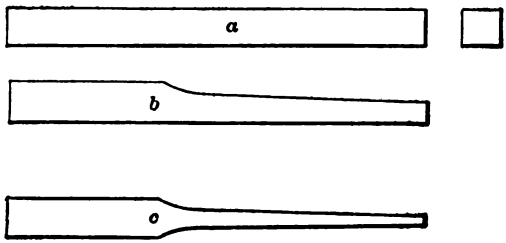

Fig. 34. Samples of Bridge Milling Cuts

attached to the vertical face of an angle iron, and done in an ordinary horizontal milling machine as indicated in Fig. 36. The best results in vertical milling are obtained by using a vertical spindle milling machine, especially if heavy cuts are to be taken; but unless there is work enough to keep the vertical machine busy, it is, generally speaking, advisable to buy a horizontal machine with a vertical attach-

ment, since it is possible to use the machine either way, as required. The fixtures for holding work when machining by this method will not differ materially from those already described. There are several advantages of vertical over horizontal milling for many classes of work; one very important one is that the surface being milled is usually more plainly in sight in the vertical machine, being turned

Fig. 35. Bridge Milling Cut on a Bicycle Crank

upward, than in the horizontal, where it would have to be turned inward to the spindle, in order to permit the milling operation to be performed.

Cams or Eccentrics for Binding Work in Fixtures

Cams are applied to vises and special fixtures in a variety of ways and furnish a rapid means of binding the work in place. At times the cam is very simply made on the end of a piece as shown in Fig. 37. If it is necessary to get considerable length of movement to the slide of the fixture, the cam may be made on a piece having a turned projection on its lower surface, which fits in a hole in the base of the fixture. When it has been turned sufficiently to relieve the pressure against

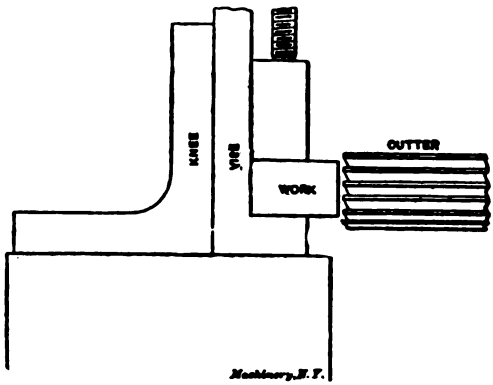

Fig. 36. End Milling on Horizontal Milling Machine

the slide, the cam may be lifted from the fixture and the slide moved as much as is necessary. After placing another piece of work in the fixture, the slide may be moved against it, the projection on the cam inserted in the hole, and the necessary pressure applied by turning the cam.

Fig. 38 shows a cam which is round in form and has a round projection which enters a hole in the fixture. This smaller projection is eccentric with the larger, in which a hole is drilled and a lever inserted as shown. This, like the previous form, may be made removable if desired. Cams of various designs may be employed for holding work, the particular design depending on the piece to be held.

Other Binding Devices

The method employed for holding work in the fixture depends, of course, on the nature of the work. Unless it is necessary to bind the work more securely than would be possible with a cam, it is not advisable to use a screw, on account of the length of time wasted in

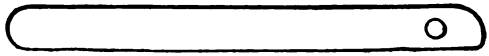

Fig. 37. Simplest Form of Cam Binder

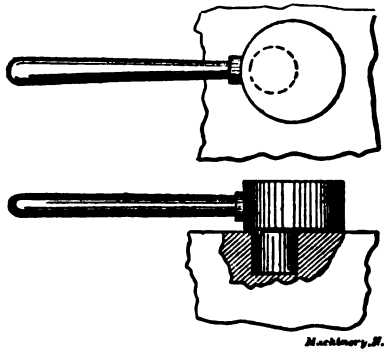

Fig. 38. Eccentric for Binding Work in Fixtures

turning it back and forth sufficiently to secure or free the work. At times it is *necessary* to use a screw, and it is found possible to save time by the use of a collar of the description shown in Fig. 39. When the nut is turned back part of a turn, the slotted collar may be removed and the work taken out, sliding it right over the nut. After putting another piece in the fixture, the collar is placed on the screw *under* the nut, and the nut tightened to give the desired effect.

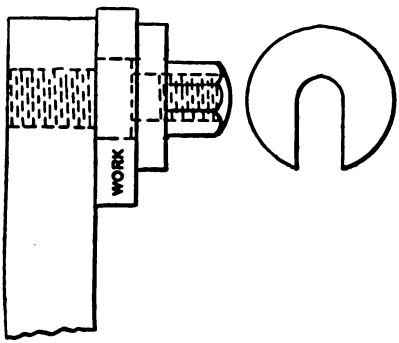

Fig. 39. Slotted Collar for Releasing Work Quickly

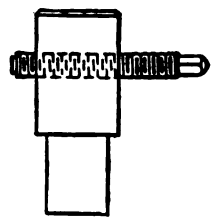

Fig. 40. Removable Post or Stud

Fig. 41 shows a method, some modification of which may be employed to hold work when it would not do to have any screw heads or other devices projecting above the strap. When pressure is applied by means

of the screw, the portion *a* is forced down onto the piece of work. The angle piece is hinged at *b*, as shown. At times it is possible to substitute a cam for the screw, and so lessen the time necessary to operate the device. When forgings or castings are machined, it is sometimes possible to take advantage of the beveled portions occasioned by the draft necessary to get the forging out of the die, or the pattern from the mold. If the amount of bevel ordinarily given is not ample to insure desired results, a sufficient amount may be given when

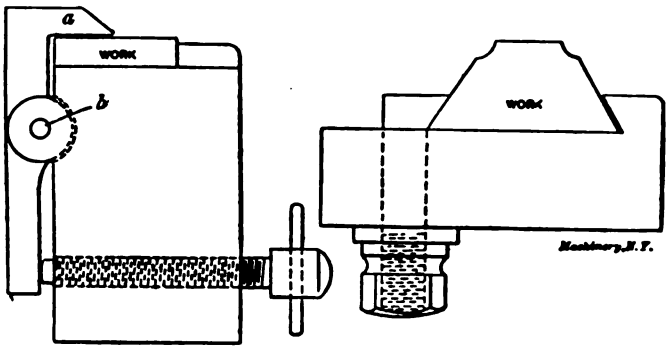

Fig. 41 Fig. 42

Holding Work where Space is Limited

the die for the forgings or the pattern is made. Fig. 42 shows a fixture holding a casting by means of considerably beveled edges.

When such a method would bind the work sufficiently strong, it is customary many times to use a screw having a right-hand thread on one end and a left-hand thread on the opposite end. Two applications

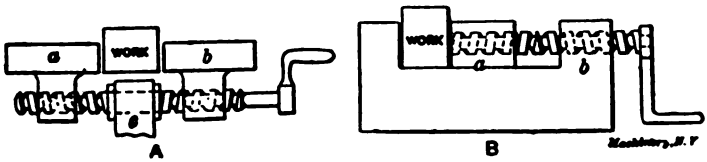

Fig. 43. Differential Screw Movements

of this principle are shown in Fig. 43; at *A* the screw is held from moving lengthwise by means of the block *c*, and the jaws are moved toward or away from each other by turning the screw. The jaw at the left, *a*, has a right-hand thread, while the right-hand jaw, *b*, has a left-hand thread. This fixture is valuable when it is desirable to mill a slot, or a projection in the center of pieces which vary in width, and where the variation is immaterial. In the fixture *B* the jaw *a* is tapped with a left-hand thread, and the stationary upright, *b*, with a right-hand thread. These threads being square in form may be of coarse pitch, thus causing the slide to move rapidly.

To save time, it is customary at times to locate the binding screw in a removable post, as shown in Fig. 40. When removing the work from the fixture the screw is turned sufficiently to relieve the pres-

sure, and the post lifted out of the hole, after which the work is removed from the fixture, the bearing surfaces cleaned, another piece put in place, and the post again put in the hole, a partial turn of the screw binding it securely. In many instances if a screw were used in a stud securely fastened to the fixture it might be necessary to give it ten or a dozen turns before the work could be removed.

Fig. 45 represents a device used for holding two pieces of work to be machined at the same time. Each piece rests against stationary por-

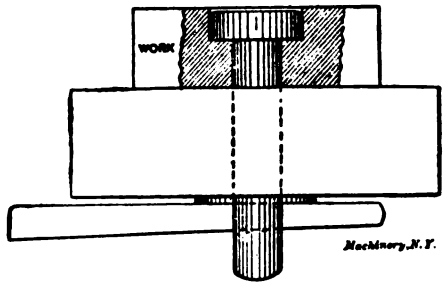

Fig. 44. Holding Work from below by a Counterbored Hole

tions *a a* of the fixture, and is held in place by the swinging pieces *b b*, which are hinged at the center, as shown, and are closed onto the work by means of the pointed screw *c* which passes through the stud *d*.

This stud can turn in the hole in the fixture, and so allow the point of the screw to swing somewhat to conform to any variation in the thickness of the pieces being held. When pieces have holes through them it is possible many times to take advantage of these in holding the work. Fig. 44 represents a piece of work having on its upper por-

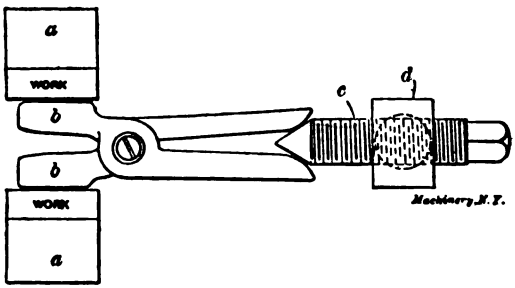

Fig. 45. Holding Two Pieces of Work at a Time

tion a counterbored hole. A pin with a head a trifle smaller than the counterbored portion of the hole extends down through the hole and through a hole in the fixture, as shown. In the small end of the pin is a rectangular hole. Through this is driven a wedge-shaped key, which draws the work solidly onto the seating surface of the fixture.

There are occasions when an ordinary cam would be objectionable and a screw would be too slow, and yet a combination of the two works nicely. Fig. 46 represents such a binding device, which is used

in holding a blank for a spring bow for a machinist's caliper, while the ends are bent in a punch press. When the screw is turned down into the threaded hole in the base, the V-shaped projection under the head passes up the incline on the upper portion of the leaf, forcing it down on the blank. When the projection of the screw reaches the flat portion at the top of the incline, the leaf has forced the blank down solidly to the bending fixture. If the screw is turned more, it, of course, continues to descend, and draws the leaf down still more. The advantage of this combination is that if a cam does not pass to its highest point at the end of the throw, it is apt to jar loose if subjected to vibration, whereas the projection under the screw head passing up

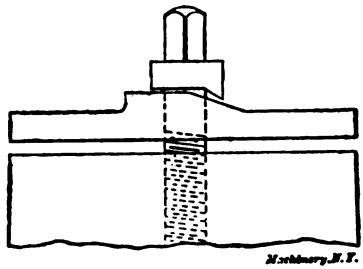

Fig. 46. Combined Cam and Screw Clamp

the incline acts as a cam, when it rests on the flat portion, and continues to draw the leaf down as the screw goes into the tapped hole. Although a fixture used on a punch press is used to illustrate the idea, the same device may, of course, be applied to fixtures for use on milling machines.

The previous paragraphs are only an outline of the fundamental principles, illustrated by means of simple fixtures and various forms of binding devices. The application must, of course, be left to the individual designer who should always bear in mind that simplicity is always preferable to elaboration, provided the simple device insures the desired result.

CHAPTER II

EXAMPLES OF MILLING FIXTURES

In the following a number of examples of milling fixture designs for definite purposes are given. These fixtures are selected as typical of the various kinds of milling fixtures found in machine shops. No attempt has been made to show only fixtures of the most approved designs, but examples indicating general practice have been taken, and attention has been called to the reasons for the special features of each design. The names of the persons who originally contributed the

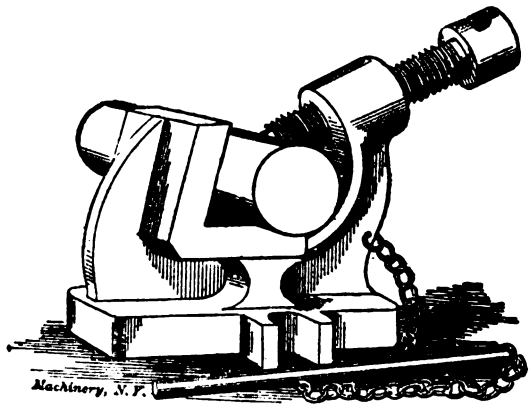

Fig. 47. Vise for Holding Shafts for Keyway Milling

descriptions of the devices shown, to the columns of MACHINERY, have been given in notes at the foot of the pages, together with the month and year when their contribution appeared.

Vise for Holding Shafts for Keyway Milling

One of the simplest designs of fixtures for the milling machine presents itself in the form of a special vise for holding short shafts and studs while milling a keyway. Such a vise is shown in Fig. 47. Several advantages over the method of clamping either in an ordinary vise or directly on the milling machine table, are apparent. The clamping bolts, holding the device to the table, are never disturbed while clamping the shafts, and if the fixture once has been set in alignment, it will remain so. Every shaft is clamped exactly alike, the screw forcing the shaft into the Vs bringing every one into exact parallelism, provided, of course, the fixture is accurately set at the start. It is obvious that this device can also be profitably used on the drill press for holding shafts and other cylindrical work for drilling, and with an adjustable arm added for holding a guide bushing for the drill, it would prove efficient as a simple adjustable drill jig.

Fixture for Holding Thin, Flat Work

It frequently occurs that thin, flat work must be held so that the whole upper surface is free, a milling cut being required to be taken across the entire piece of work. This prevents the use of any clamping devices which bear down upon the work from above, and, if the work is very thin, it does not permit of set-screws entering to bear upon it from the sides, as the diameter of the screws would be greater than the thickness of the work, and consequently project above the surface of the latter. The design of fixtures for the conditions outlined is often a rather difficult matter. A simple solution of the clamping problem is shown in Fig. 48. This cut presents merely one clamp, but it is evident that two or more clamps of the same kind are required for a complete set. The clamp is bolted to the table *H*, with the T-bolt *G*, and the bottom of the casting *A* is planed with a slot for

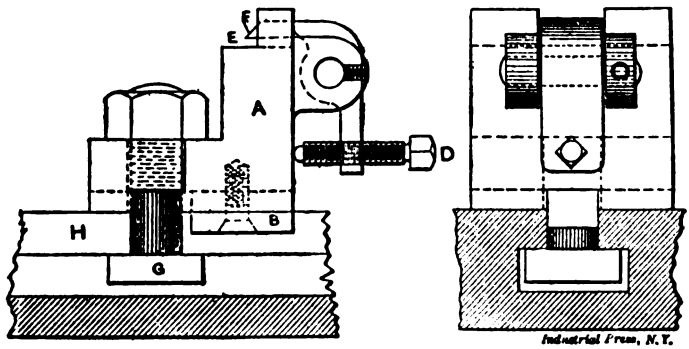

Fig. 48. Fixture for Milling Thin, Flat Work

the key *B*. These clamps are used for any flat work which is placed down on the seat *E;* the set-screw *D* is then tightened, thus forcing the steel point *F* downward and into the work. The same operation performed upon the other end securely clamps the work. If the work is long, and so thin that it is likely to spring away from the cutter if not supported in the center, this device should be modified so that the clamps are made integral parts of a fixture body which is planed on top and gives a support to the work for its full length.

Milling Fixture for Bolt Heads

In Fig. 49 is shown a device for performing a special milling operation, which, however, will illustrate some principles of general milling fixture design. It was required to mill the sides of the heads of screws, such as shown at the upper left-hand corner in the cut, so that they would assume the shape shown at the center of the cut at the top. The fixture shown in the lower part of the cut was designed for this purpose. It consisted of the body *A*, made of mild steel. It was planed all over, and a groove was cut through the body lengthwise, which was made of the same width as the diameter of the body of the screw. A hole was counterbored in the center to a depth equal to

the thickness of the head after being milled. Two clamps *B* were made of tool steel, and hardened to prevent bending. These were machined to fit the groove, thus keeping them from shifting sideways and always in line with the body of the screw to be milled. The two binding screws *C* were also made of tool steel and hardened.

Two 4-inch side or straddle mills, held apart by a collar of a width equal to the diameter of the screw, were used to mill the heads. After placing a screw in the fixture, as shown in the cut, the fixture was placed in a vise on the milling machine, the straddle mills being set to the clamps for position sidewise, and just touching the body of the fixture for the vertical position. With this fixture it was possible to mill the heads with only one cut, and it was found quite

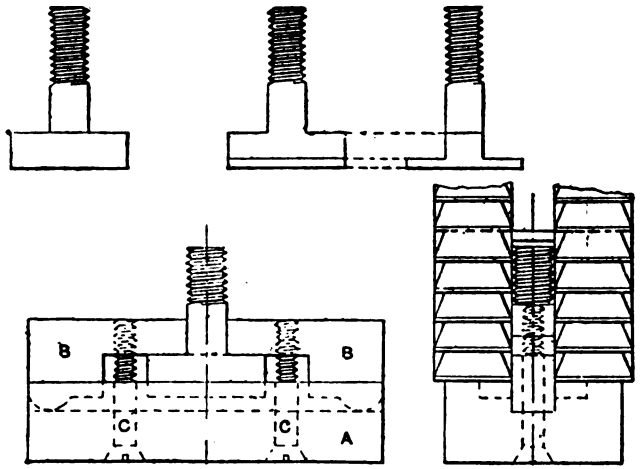

Machinery, N.Y.

Fig. 49. Fixture for Milling Bolt Heads

satisfactory. While, however, it was possible to mill the screws in this manner so that the result was satisfactory, mechanically, it does not say that this fixture was satisfactory economically. If there were but a few screws to be milled as indicated, then, undoubtedly, a simple fixture like the one shown was preferable. But if there had been a great quantity of screws upon which this operation had to be performed, then a fixture milling one screw at a time, and requiring first the tightening of the two screws *C*, and then the tightening of the milling machine vise, would not have been in place. In such a case a fixture permitting a great number of screws to be clamped simultaneously, and to be milled all at one time, although more expensive to make at first, would in the long run have proved cheaper. A fixture employing this principle is shown in Fig. 50.

The purpose of this fixture is not the same as that of the previous device described, but the principle may be employed for almost any kind of a milling fixture for small work. The fixture shown in Fig. 50

is used on a milling machine for slotting pieces such as shown at *A*, and also for slotting screw heads. The vise jaws *G* and *H* are made out of tool steel, and are left soft; they are placed in a milling machine vise, and the piece *A* to be slotted is placed between the two jaws, as shown. The chamber *C* is a cylindrical hole into which are drilled holes from the side for the cylindrical plungers *D*. The chamber *C* is filled with tallow, and, as the pieces *A* are clamped in between the plungers *D* and the vise jaw *G*, the tallow provides an equalizing effect until all the parts are held equally firm. This means permits pieces of a slightly uneven length to be held securely. The plungers *D* must, of course, be a very good sliding fit in the holes running down to the chamber *C*. The pin *E* simply serves the purpose of locating the piece *A* by entering the hole in its center. The holes *F* are tapped to receive screws holding the jaws to the milling machine vise. Pieces *E* and *D* should be made of tool steel and hardened. When screw

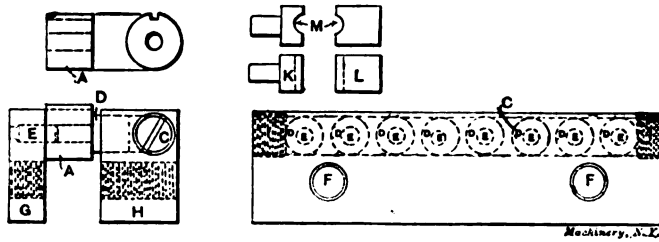

Fig. 50. Equalizing Vise Jaws

heads are slotted, the parts *K* and *L* are used instead of *D* and *E*. The screws are then held in the semi-circular grooves *M*, the operation of the device being the same as when slotting pieces *A*. The screws *I* in the ends of the circular chamber *C* simply serve the purpose of preventing the tallow from escaping at the ends.*

Fixtures for Slotting Screw Heads

While the fixture in Fig. 50 is, at times, used for slotting screw heads, it is not primarily intended for this purpose. In Fig. 51 is shown a fixture which is designed for this work exclusively, and which, although simple, is an excellent device for holding screws for slotting the heads. It has the great advantage of holding each screw with the same grip, no matter if the diameters are not uniform. It consists of the angle plates *C* and *D*, both having tongues underneath to fit the slot in the milling machine table, and in *D* are fitted the binding screw *E* and the guides *B*, which latter are securely fixed. The guides carry the V-blocks *A*, between which the screws are clamped The guides slide freely through the holes in the angle plate *C*, and may be made whatever length desired to accommodate the number of V-blocks and screws. If the full capacity of the jig is not required, say only four screws are to be slotted, as shown in the cut, the angle plate *C* is moved toward *D*, so that the binding screw *E* shall be long enough

* S. Oliver, September, 1907.

to clamp the screws. In fact, the arrangement is a most flexible one, and should prove a very satisfactory fixture for any shop.

A rather interesting and suggestive slotting device, the principle of which can be applied to a variety of work where it is necessary to slot many pieces with rapidity, is shown in Fig. 52. The part *A* is a cast iron block, which is bolted and keyed to a hand miller, and *B* is a post which swivels in *A*. At *C* is shown a lever with its fulcrum on the pin *D*. The jaw *E* is hinged to the lever and is held in a closed position by means of the spiral spring on the round head screw *F*, the tension being controlled by lock-nuts. The tool steel plate *G*, on which one

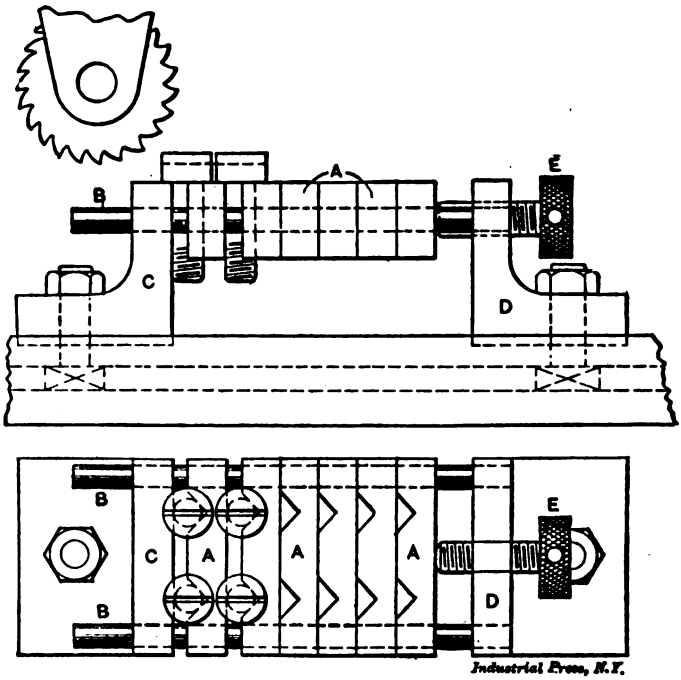

Fig. 51. Fixture for Slotting Screw Heads

end of the piece to be slotted rests, is screwed and doweled to the jaw *E*. The spring H holds the end of the lever down clear of the cutter, when it is not in operation.

The fixture is first brought clear of the cutter by moving the machine table back; the jaws are then swung out from the machine, bringing the jaw *E* against the pin *I*, which compresses the spring on *F* and thus separates the jaws, so that the piece to be slotted can be put in between the six locating pins. The pressure being then removed from the spring allows the latter to bind the piece securely in place. The lever is then swung so that the jaw *E* comes up against the pin *J*, and the lever itself rests on stop *K*. The table is then fed forward, bringing the piece against the bottom of the cutter, which slots it to the

desired depth. The piece is released by a reversal of these operations. This fixture has proved satisfactory, as it is possible when the machine is ready for operation to turn out 300 pieces per hour. The principle of this fixture could be used for slotting screws.*

In Fig. 53 is shown another device for slotting screws. This is more elaborate, and permits of a continuous operation, the operator placing the screws to be slotted in the fixture simultaneously with the slotting of the screws previously put in. At *A* and *B* are shown two rings of machine steel, case-hardened, with holes drilled on their peripheries suitable to grasp the work to be slotted. The number of holes will vary according to the speed at which the fixture is run and the work

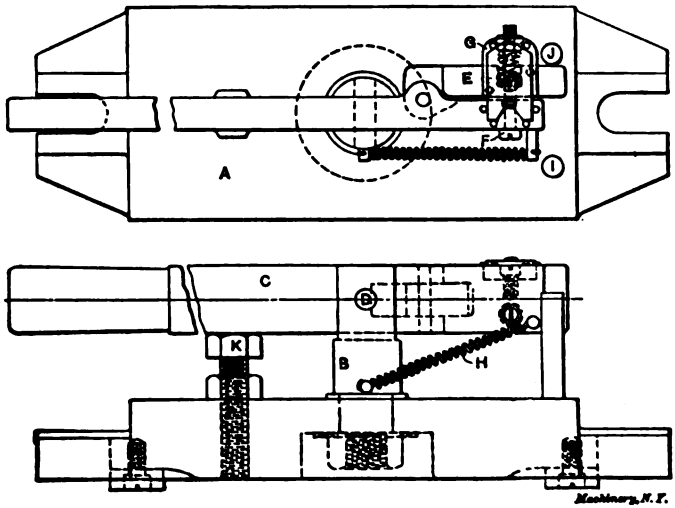

Fig. 52. Slotting Fixture for Hand Miller

being slotted. The rings are held and located on the holders *C* and *D* by screws and dowel pins not shown in the cut. Holder *D* is driven by means of a belt from the countershaft to grooved pulley *E* and through spur gears *F* and *G* and worm and worm-wheel *H* and *J*. Holder *D* is made in one piece with the worm-wheel shaft. Holder *C* is in turn driven by holder *D* by means of pins *K*, held in holder *D*. Spring *L* takes care of any variation which may exist in the size of the pieces being slotted.

To locate and drill the holes, which retain the work, in rings *A* and *B*, they are screwed and doweled on the holders, and the fixture placed on a drill press in such a manner that an equal section of the hole will be drilled in each ring. The rings are then case-hardened. For different pieces of work it is merely necessary to make different rings to suit the conditions of the piece. The bracket *M* is adjustable forward and backward to allow different thicknesses of rings to be

* S. A. McDonald, November, 1907.

used. The hole in bracket *M* is bored at an angle of 2 degrees, and the plate *A* is also faced off at the same angle, so that it will be parallel to ring *B* at *N*. By boring the hole at an angle, it will be readily seen that at point *O* the space between the two rings is the greatest, and at point *N* the least. In operating the fixture, it is placed on the milling machine so that the slotting saw will pass directly through the center of the screw head to be slotted, and directly over the center of the rings. The fixture is then started, and the operator only inserts the work in the holes. As will be seen, the piece is gripped firmly while passing under the saw, and automatically dropped when reaching the bottom.*

Fixture for Splitting Work in Two Parts

Sometimes a simple operation like splitting a piece of work in two will be found to present difficulties equal to those encountered in much more complicated operations. One such a case was met with in machining the pieces shown in Fig. 54, which were to be split in two along the line *X-X*. Owing to the peculiar shape of these pieces it was impossible to clamp them, by simple means, in any position so as to mill more than a single one at a time, and as a large quantity were to be made it was desirable to arrange so as to cut a number at a single operation. For this purpose the fixture shown in Fig. 55 was constructed and with this ten pieces could be cut at a single setting.

This fixture consisted of a casting *A* which was provided with a tongue for aligning it upon a milling machine table, and a slot at either end for receiving a clamping bolt. A series of holes, of the same size as that in the work, was drilled in the upper part of the fixture, and to insure their being parallel with the tongue, the drilling was done in place upon the milling machine, the vertical attachment being used. These holes were fitted with the studs *B*, which were of sufficient length to extend through the work *C*, as shown in the section. On the bottom of each stud was placed a split washer and nut, the latter being small enough to pass through the hole in the jig and work. These studs were prevented from turning when the nut was tightened, by means of a set-screw *D*, the point of which fitted a slot in the side of the stud. A similar slot was also cut in the side of the nut so that it could pass the set-screw. A slot *E*, the width of the splitting saw, was cut through the top of each stud, and the set-screw *D* insured this slot being always in proper position for the saw to pass through when splitting the work.

Before the pieces were placed in the jig, they were bored and faced on the top, bottom and on the straight sides, so that the splitting formed the last operation. Ten of the pieces were placed on the fixture, the bolts *B* put through and the washers put in place. Before tightening the nuts a straightedge was placed along the front side of the pieces so as to set them all squarely, after which the nuts were tightened and the saw passed through the group in the usual manner.**

* Fred R. Carstensen, September, 1907.
** Charles P. Thiel, August, 1903.

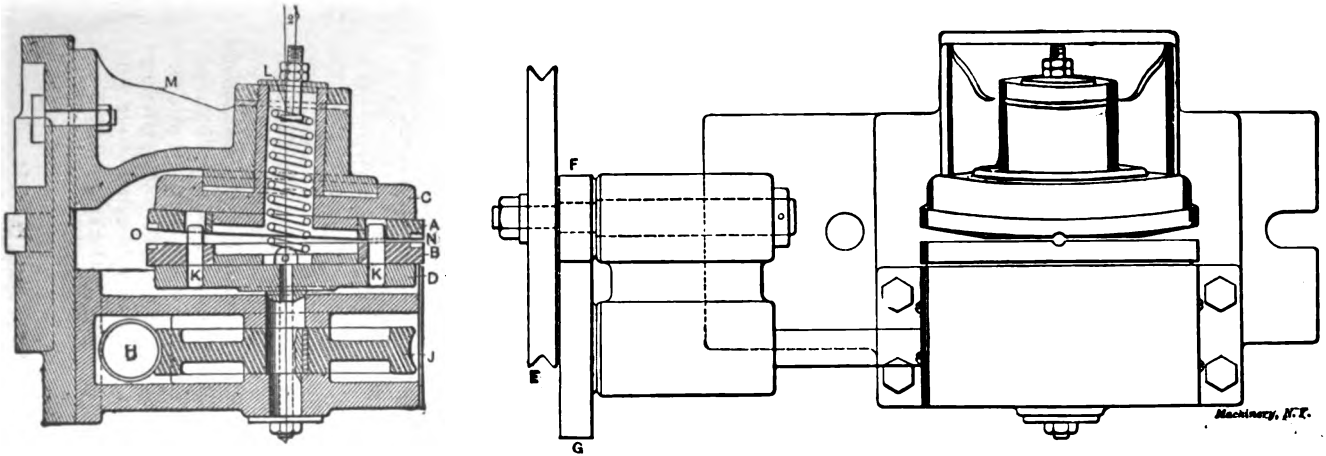

Fig. 53. Screw Slotting Fixture for Continuous Operation

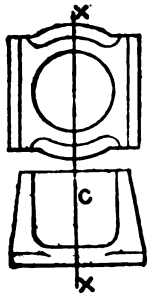

Fig. 54. Piece to be Split in Two

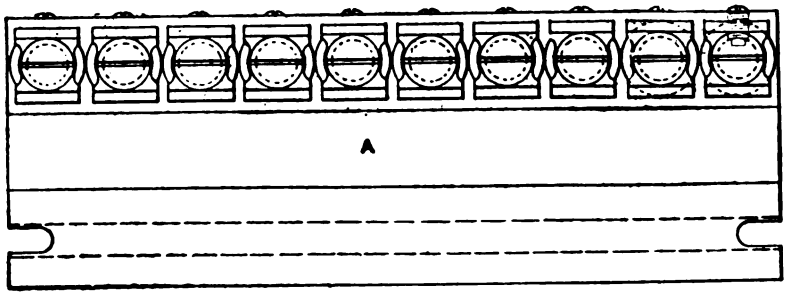

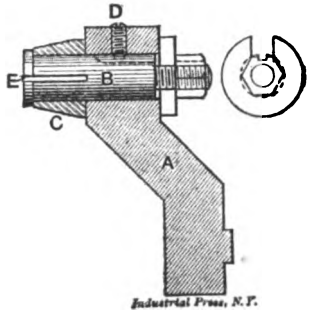

Fig. 55. Fixture for Splitting Ten Pieces at a Time

Slotting Fixture for Special Chuck

The piece shown in the upper right-hand corner of Fig. 56 is a latch chuck, made of cold-rolled steel, and used on a special machine for holding the ends of rods. The body and the center holes on both ends are turned in the lathe and the other holes are drilled in a special jig.

The fixture shown in Fig. 56 was designed for holding the chuck while milling the longitudinal slot to receive the latch, which was required to be exactly central with the axis of the piece. While not of unusual design, it possesses some advantages that make it especially useful when it is necessary to perform milling operations of this nature. It is so made as to be free from any outside incumbrances, and the parts where wear is likely to become appreciable are hard-

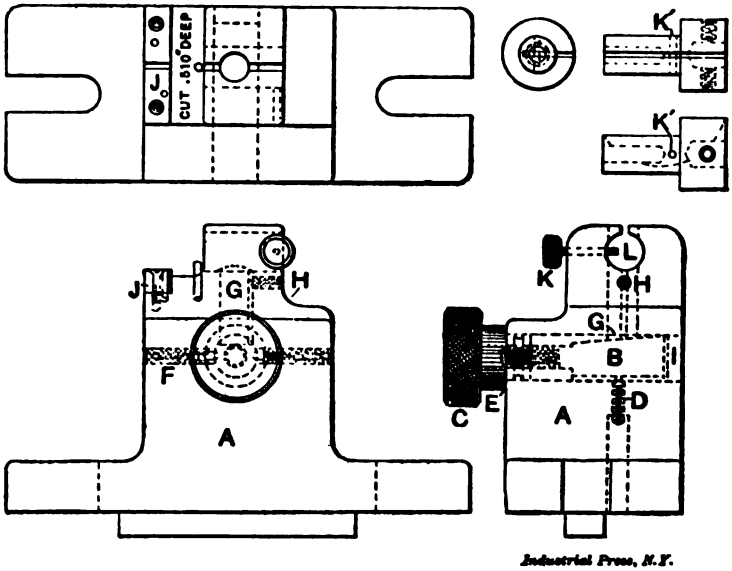

Industrial Press, N.Y.

Fig. 56. Slotting Fixture for a Special Chuck

ened. The principle applied to the clamping mechanism is that of a gradual wedging action, thereby holding the work securely, and at the same time permitting the quick removal of one piece and the insertion of another by simply turning the knurled knob to the right or left as may be desired. As will be seen, the clamping mechanism is entirely enclosed, thus avoiding dust and dirt, and lessening the liability to accident from any external cause. While the illustration shows only one way in which this device may be employed, a wider field of application will without doubt suggest itself, as it is suitable for holding all kinds of milling jobs, especially where the work is polished and would be marred by clamping in a vise in the ordinary manner.

The fixture is made of liberal proportions, to insure rigidity, and is tongued and slotted for clamping bolts. Through the center of the

body of the fixture is drilled a hole carrying the tightening clamp *B*, the larger diameter of which fits snugly in the hole while the neck is turned down and threaded to fit the clamping knob *C*. To prevent the piece from turning, when the knob is turned, a groove is cut the entire length of the larger diameter, and into this fits the point of the set-screw *D*. The upper face of *B* is milled flat on a taper of one inch per foot and this part of the piece is made very hard. When clamping the work, the shoulder of the knob brings up against the body of the jig at *E;* on reversing, the two screws *F*, with their points seated in a rounded groove in the knob, prevent it from being withdrawn.

The semi-circular faced plug *G* stands vertically in the position shown, one end resting on the inclined face of *B* and the other bored out to conform to the diameter of the work. A spline is cut on one side to receive the point of the screw *H* which, while permitting a free movement up and down, checks any tendency of the piece to rotate. This plug fits the hole so freely that when it is released it falls away from the work by gravity. When the parts of the fixture are assembled, the chamber in which the slide *B* is located is filled with vaseline and the plug *I* driven in, thereby completely enclosing the mechanism and preventing the ingress of grit or the escape of the lubricant.

The milling of the slot in the work is performed with an ordinary metal saw of the required width; setting it central is simplified and facilitated by the set gage *J*, which is of tool steel, hardened and fastened in place with screws and dowel pins. The depth to be cut is measured by the graduated dial on the milling machine. In this case it is 0.510 inch, and this is stamped upon the fixture for convenience of future reference. To operate the fixture, the pin *K* is withdrawn a sufficient amount to clear the hole *L*, and the nose of the chuck to be milled is inserted against the stop pin. The chuck is rotated by hand, at the same time pressing upon the head of the pin *K*, until the pin slips into the fulcrum pin hole for the latch, *K'*, that has been previously drilled in the work. A turn of the knob *C* then clamps it tightly for the milling operation.*

Fixture for Plain Milling

While plain milling operations seem very simple to the casual observer, it is often a perplexing problem to so arrange and systematize these operations, when several surfaces are to be finished on the same piece of work, that the required accuracy is combined with a reasonable degree of speed of carrying out the work. In Fig. 57 is shown a fixture of very simple design for milling pieces in duplicate, where several faces are surfaced. This fixture reduces the setting of the machine and handling of the work to a minimum.

Let *A* represent a piece to be surfaced on spots shown on the sides and ends, these surfaces to bear definite relations to one another. It is quite possible to put spotting pieces on the top or bottom, and finish these first, fasten the work to the table and finish one side, and then, by parallels and squaring plates, finish the other surfaces from the

* C. H. Rowe, October, 1903.

first. But this means a good many measurements, bolts, straps and settings of the machine, the mass of which may be avoided by the fixture shown. It consists of a casting *B* to which the work is fastened in any convenient way after being located by the spots *e e'*, *s s* and *s' s'*, which are finished to the dimensions of the finished work, and serve to show the necessary position of the work in order to clean. The fixture has on its lower side a key slot *k* corresponding to the slot in the machine platen and spaced equally between the opposite spots *s s* and *s' s'* on the side.

In setting up the machine, the fixture is located by the key, and the cross-feed screw is used to bring the spots *s s* or *s' s'* to the line of cut of a face mill on the spindle nose. As the slot *k* is located centrally

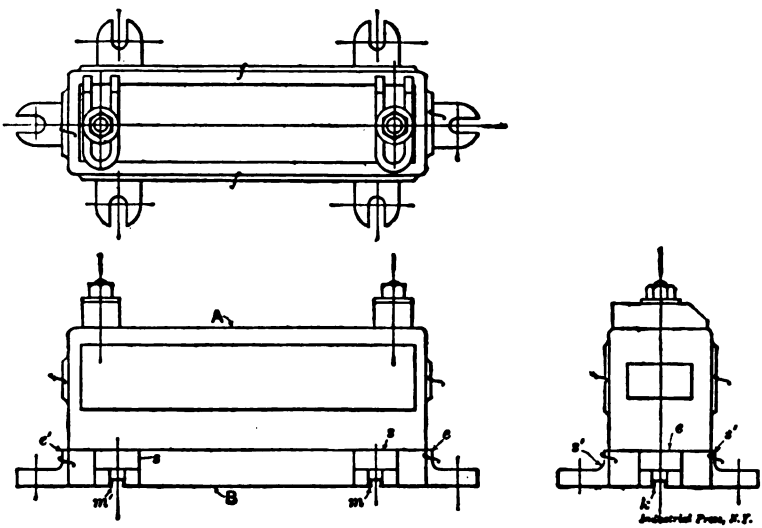

Fig. 57. Time-saving Fixture for Plain Milling

between the sides to be milled, the same setting of the machine answers for both sides, it being necessary only to turn the fixture around. The ends are placed in position in the same way, and without altering the setting of the machine, for the slots *m m'* near the ends of the fixture are the same distance from surfaces *e e'* as is slot *k* from surfaces *s s* and *s' s'*. Therefore, the operator has simply to see that the key enters the slot properly.

Ears may be provided for receiving the bolts which, when loosened, may simply be moved to suit the new position of the fixture as it is swung around. In practice one side may be milled first and then one end, the other side, and the other end; one rotation completing the piece. On many kinds of work the key and slots would not be accurate enough, in which case a base plate upon which the fixture might be located by dowels could be brought into service. The principle, however, would remain the same.

Simple But Efficient Milling Fixture

Figs. 58 and 59 show a piece of work, and the method employed for finishing the bosses on same by milling. In Fig. 58, which shows the work, the surfaces finished are indicated by the letter *f*. The fork end of the work is finished by the cutters *A*, *B*, and *C*, Fig. 59, while the other end is finished by the cutters *D*, *E*, *F*, and *A*, in the same figure. In Fig. 59 is also shown a plan view of the device which supports the work when being milled, as well as a side view of the device. It will be seen that the fixture for holding the work is very simple, consisting simply of three V-block supports, one at *G* supporting the casting near the fork end, and two at *H* supporting the hub at the other end. There are two vertical standards K which are mortised for a key which clamps the work down on the V-blocks. The particular feature

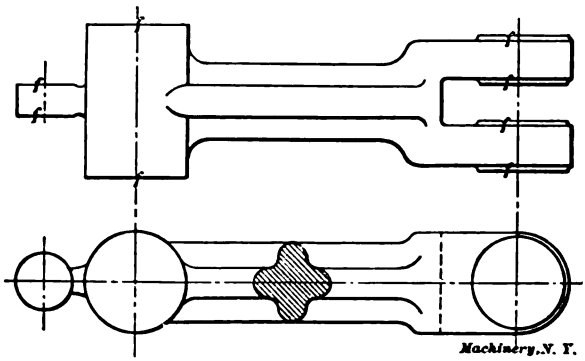

Fig. 58. The Work to be Milled in the Fixture in Fig. 59

of this device is that the V-blocks are located at such a distance from the center that, when the hub is milled and finished, and the upper plate of the jig revolved one-half of a revolution, the center cutter *A*, which has been previously employed for finishing one side of the hub, will be in correct position to mill one side of the fork end, the spacing collars between the cutters, of course, being made to take care of the required distance. A stop pin is used for keeping the upper revolving plate in the correct position in regard to the lower bed-plate.

A milling fixture of this description can be used advantageously on a great number of pieces which are ordinarily jigged two or three times. One great advantage inherent in this class of fixture is that the work is finished at one setting, thus insuring that all the machined surfaces are in proper alignment. Another advantage is that the work is handled only once at the milling machine, while if milled in the usual way, the hub end would be milled with a straddle mill, and then the casting taken to the drill press, and after the drilling operation returned to the milling machine for finishing the fork end, the work being probably held in another milling jig and located by a pin or stud through the hole in the hub.*

* Y. Ziegler, November, 1908.

Adjustable Milling Fixtures

Often, when a number of different sizes of some work, shaped and finished in the same or similar ways, are to be milled, it is possible to make milling fixtures, which with slight modifications and adjustments may serve for all the various sizes of the work, saving the expense of a great number of different fixtures. Such fixtures may be termed adjustable milling fixtures. They can often be made in a very simple manner.

The casting shown in Fig. 60 strapped to the table of a milling machine is one of a large variety of housings of widely varying shapes

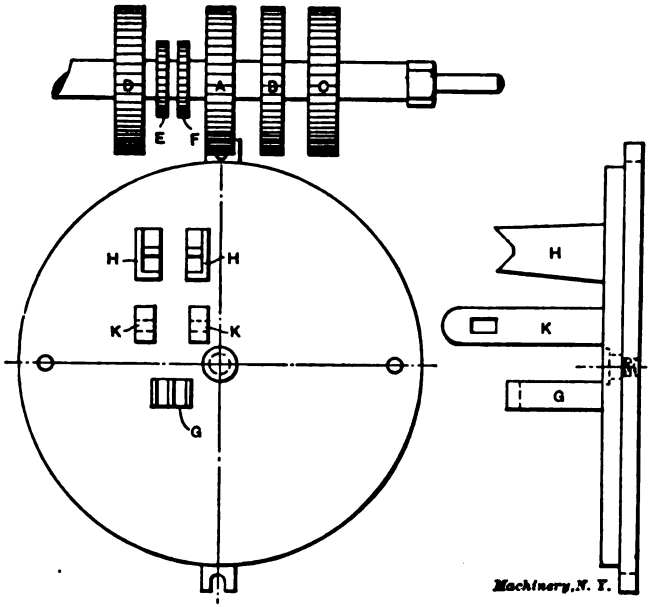

Fig. 59. Fixture for Milling Work shown in Fig. 58, at One Setting

and sizes, which are used in the construction of a certain automatic machine. These housings resemble each other in that they are provided with a V-groove at the bottom, where they are clamped to the bed of the machine, and also in the fact that they are made with various pads and bosses, similar on both sides, which have to be milled off to a uniform thickness of 1½ inch. The cross-sectioning in the plan view distinguishes the finished areas. The large number of patterns used would have made the job of providing a separate fixture for each style of casting a very costly proceeding. Therefore the following sectional fixture was made, and has proved to work well on all the different pieces on which it has been tried.

Fig. 61 shows the different parts of the fixture in detail: *A* is a block with a set-screw and spur, similar to that used on a planer; *B* is an abutment provided with a steel block to enter and hold down the V-groove edge of the casting; *C* is a simple stop to take the thrust

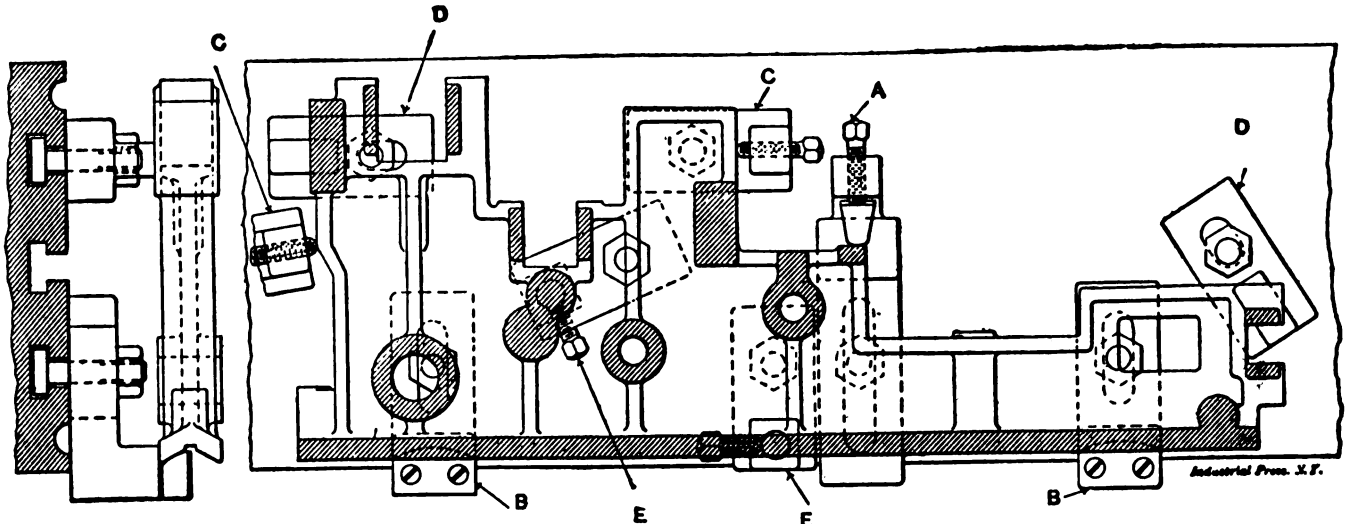

Fig. 60. Adjustable Fixture for Holding a Machine Housing on the Milling Machine Table

of the cut; *D* is a wedge used under springy places in the casting; and *E* is a spring-jack used where convenient for a similar purpose. In Fig. 60 a typical casting is shown on the milling machine platen with the various holding pieces arranged about it. The two blocks *B* are placed at the outside edge of the table, and the work is supported on these and the spur block *A*, thus giving a three-point bearing for a foundation. The spur holds it down on one side, and the steel blocks in the V-groove hold it down on the other. Blocks *C* with their set-screws are arranged as shown to take up the end thrust in each direc-

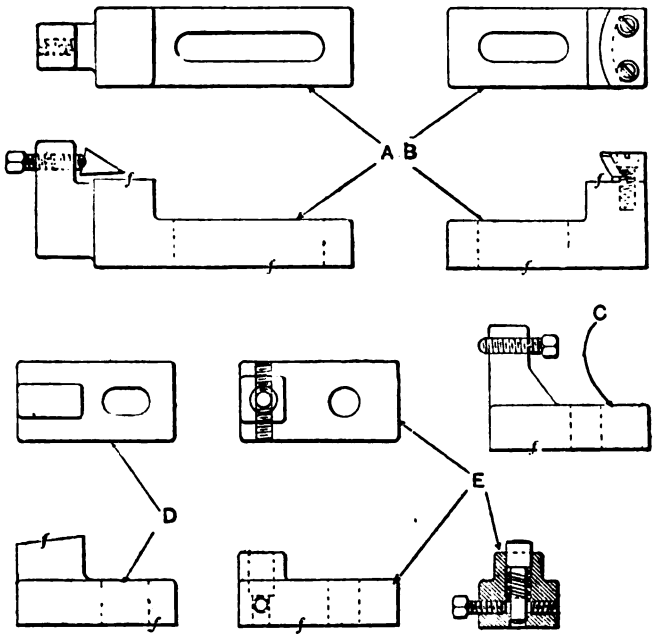

Industrial Press, N. Y.

Fig. 61. Details of Adjustable Fixture shown with Work in Fig. 60

tion, and wedges *D* are slipped lightly into contact with outlying corners of the work where support is needed. Spring-jacks *E* are also located where the work is most liable to spring under the influence of the mill. These jacks are fastened permanently in place, the set-screws loosened, then the work is pressed down into place and fastened with the spur block *A*. The set-screw, which bears against the teat of the spring plug, is then clamped, and the casting is thus supported without the possibility of the casting being sprung as it would be if fastened down onto a solid bearing which might or might not be of the right height. The set-screw may be placed in either side, as convenient, as shown in detail of spring-jack in Fig. 61.

A 6-inch end-mill is used in the vertical milling attachment to make the surfacing cut. This does its work more rapidly and with less

pressure than a cylindrical cutter would. Care is taken to feed in such a direction that the thrust of the cut will be toward the V-blocks *B* or the stops *C*, although when once by mistake the cutter was run toward the spur *A*, this seemingly insecure fastening device held the work well. The housings are allowed a limit of 0.002 inch over or under the standard thickness of 1½ inch.*

Gang Milling Fixtures

In the manufacturing of small interchangeable castings for machine parts, gang milling fixtures play a very important part. When the parts are machined to extremely accurate dimensions, and are produced under the modern piece-work system, the object sought is to handle as many castings at a time as possible, in fixtures so designed as to insure the complete interchangeability of the product. To illustrate the value of gang milling fixtures for manufacturing accurately machined duplicate parts, and also how a number of such parts may

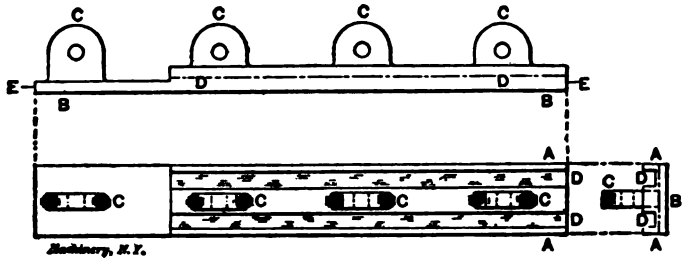

Fig. 62. Casting Milled in Fixture shown in Figs. 63 to 66

be handled and machined expeditiously at the minimum of cost, a gang milling fixture which is in use in an establishment requiring over 100,000 of the castings machined in this fixture per year, has been described in the following.

In Fig. 62 we have three views of the casting machined in the fixture. The work performed is the milling of the two channels indicated by *D*. Previous to this operation the casting is machined on the back *B* and also on the sides and ends *A* and *E* to limit gage measurements. Subsequent to the operation, the four holes are drilled in the projecting lugs *C*, the insides of the channels being utilized as banking or abutment surfaces for the locating of the castings in the drilling jig. Figs. 63 and 64 are two views of the fixture complete, Fig. 63 being the plan view, which shows the appearance of the fixture without the work in it, and Fig. 64 a vertical cross-sectional view. Fig. 65 is a longitudinal sectional view of the fixture, and also of the gang of ten cutters used in conjunction with it. *Y* represents the cutters; *X* represents the washers or collars; and *W* represents the milling machine spindle. Fig. 66 is an end view illustrating the fixture with the work in position and presented to the cutters for milling.

* Ralph E. Flanders, October, 1904.

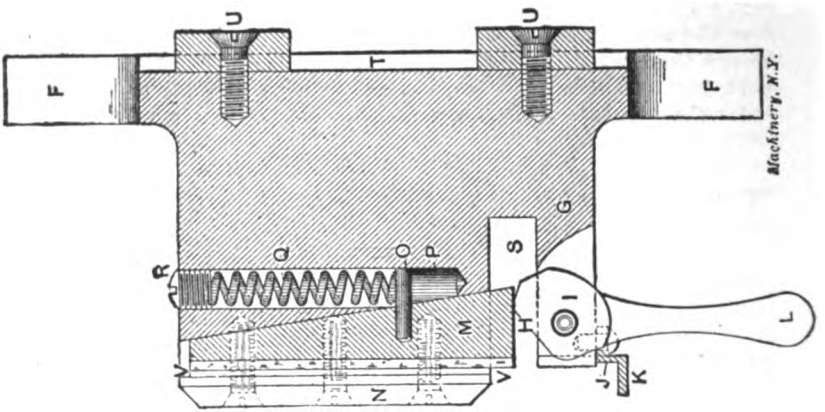

Fig. 64. Vertical Cross-section of Fixture

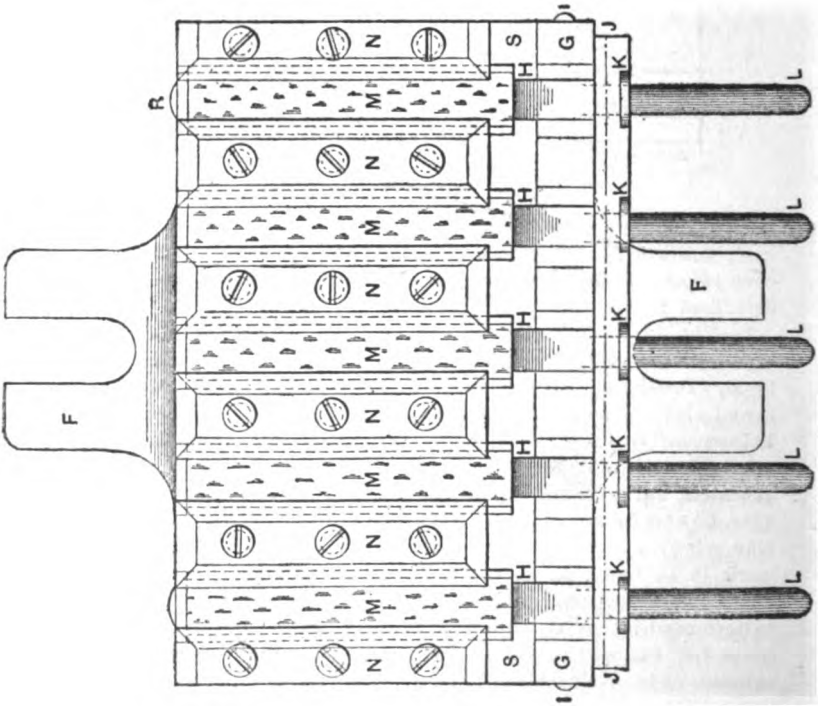

Fig. 63. Plan of Fixture for Milling Work shown in Fig. 62

The fixture handles five castings at a time. The body casting has projections or wings *F*, at two sides, and has two locating tongues at *U*, for fastening and locating it on the table. The body casting has five inclined channels milled in its face to accommodate the five hardened tool steel work locators *M*. The five parts *N* are also of tool steel, hardened and tempered, and fastened to the wall surfaces between the inclined channels by means of three flat-headed screws each. These pieces serve as banking pieces or surfaces for the work to clamp up against. Five eccentric levers *L* force the work locators up the inclined ways, thus clamping the work in position against the plates

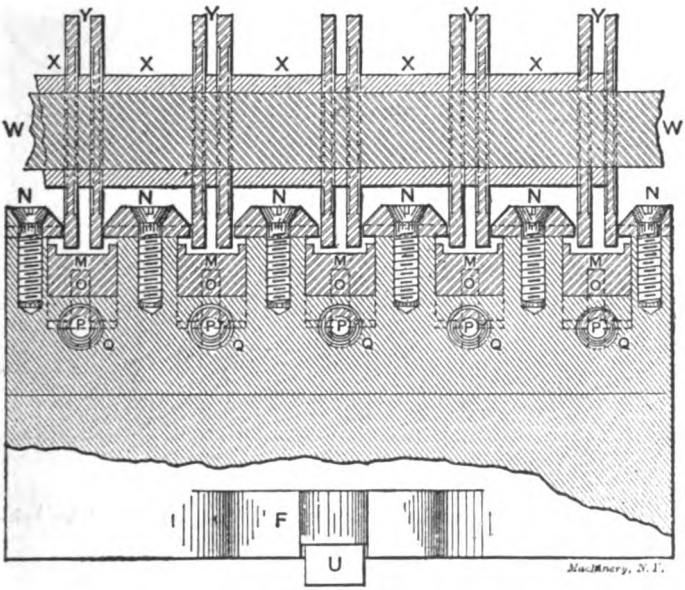

Fig. 65. Longitudinal Section of Fixture, Fig. 63, and Gang of Cutters

N. These levers are fastened in milled slots by means of the drill-rod shaft *I*. The eccentric portions of the levers are indicated clearly at *H* in Figs. 64 and 66. *J* is a stop bracket fastened to the back of the fixture or body casting by means of several round head screws. The portions at *K* are stops against which the ends of the castings to be machined, abut. The construction for forcing the work holders back in the inclined channels upon the releasing of the eccentric clamping levers *L*, thus allowing of the removal of the work, is shown in the vertical sectional view, Fig. 64. It consists of a stiff spiral spring *Q*, located in the drilled hole *P*, a pin *O* for engaging this spring, and the headless set-screw *R*. One end of the spiral spring rests against the screw *R*, and the other against the pin *O*. The tension is kept sufficiently stiff to cause the work-holders to release the work immediately upon the lever *L* being pulled upward; each of the five work holders is equipped with such an arrangement.

When in use, the fixture is clamped to the table of a large universal miller, and this is then adjusted until the work receivers or holders are in the relative positions to the cutters illustrated in Figs. 65 and 66. The castings are located in the holders; the eccentric levers are pushed downward, as shown in Fig. 66; and the castings are thus clamped in position. The feed is then thrown in and the table and

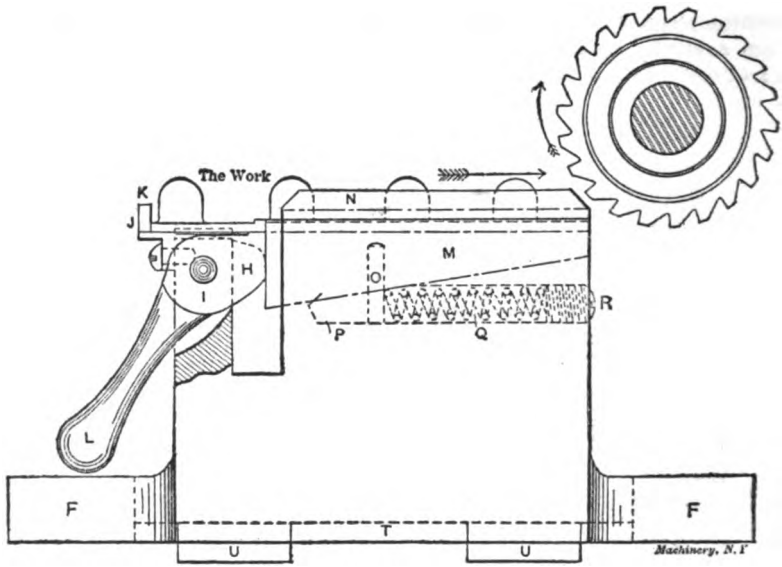

Fig. 66. End View of Fixture, Fig. 63, with Work in Position

fixture travel forward until the channels *D* are milled. The table is then fed backward and the machined work removed.*

Fixtures for Milling a Journal Cap and Base Plate

Simplicity in jig and fixture design is one of the most important fundamental principles. It is not necessary that a fixture be elaborate to be efficient. On the contrary, it is often the case that the simpler fixture is by far the one to prefer, as it has less parts to repair, and, when repairs are needed, they can be carried out with less trouble. The following description of tools used in the milling machine for finishing a journal cap and base casting, gives a few instructive examples of simplicity in fixture design coupled with efficiency.

Taking the cap first, we may hold it in the manner indicated in Fig. 67. If we are manufacturing a large number of these pieces it will pay to make special fixtures for arranging them so that the extreme length of the table feed or travel may be used. We may arrange to take one or more rows of the castings side by side, depending on the size of the miller. The cap will be seen to be resting on pins where the bosses for the cap bolts come, this making a convenient and reli-

* Joseph V. Woodworth, July, 1905.

able foundation. The cap is held sideways by the set-screws on either side and is held down on the pins by the clamp shown in the sectional view. The cut explains itself, so that but few words are necessary in connection therewith. In the holding of work on the milling machine table or in supplementary fixtures it seems to have become the idea that it is necessary to bolt it down with all the force that it is possible to use without stripping the thread on the bolts. So much strain is not necessary, serving as it does only to distort the table, making it run hard and eventually producing a permanent set which gives the working surface an untrue face. This straining of the binder bolts also wedges the T-slots out of shape, peening the metal above the T so as to project above the rest of the surface. An examination

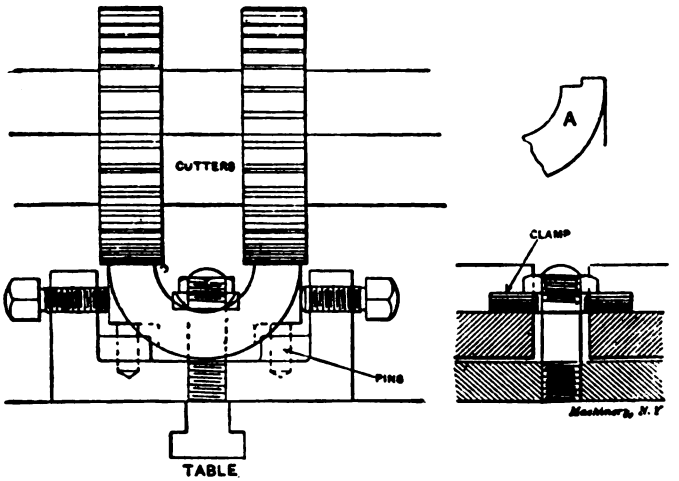

Fig. 67. Simple Fixture for Milling Cap for Bearing

of the machine in operation will show that in 90 per cent of the work done the force or pressure of the cut is symmetrical and has but little effect on the work, all the holding required being merely that necessary to keep it from sliding either along in front of the cutter or sideways. This is accomplished by bunters and toe clamps. Of course it is necessary that the work be held down on the table, but very little power is necessary in doing so. If the cap is made with the matched fit shown at *A* instead of with straight fit, the advantage of milling over planing such classes of work is very apparent, as gang cutters will then finish the work at one setting, while the planer will require at least two settings. But the real gain would be in obtaining interchangeable work which can be obtained on the planer only at the expense of considerable time and trouble, but which is a matter of course on the miller.

In performing the corresponding operation on the base casting we have the advantage of the broad base and the projecting surfaces for clamping which make it an easy matter to set and hold the work. The

same that has been said regarding the operations on the cap may be applied to the base. Fig. 68 shows how this piece would be held. The clamps hold down the piece, while the piece is blocked up against a liner to insure a setting parallel with the travel of the table. The row is kept from shifting endwise by using the bunters mentioned above.

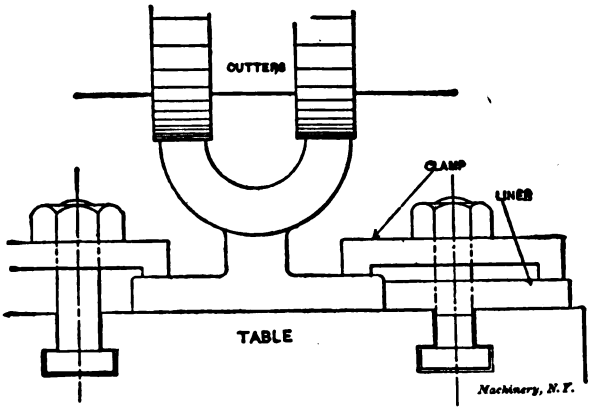

Fig. 68. Holding the Base of Bearing while Milling Seat for Cap

In machining the foot of the base piece we are confronted by a job that presents a kind of milling operation which has many little points of interest. The problem of milling comparatively broad surfaces is presented. It is an acknowledged fact that the milling of such surfaces

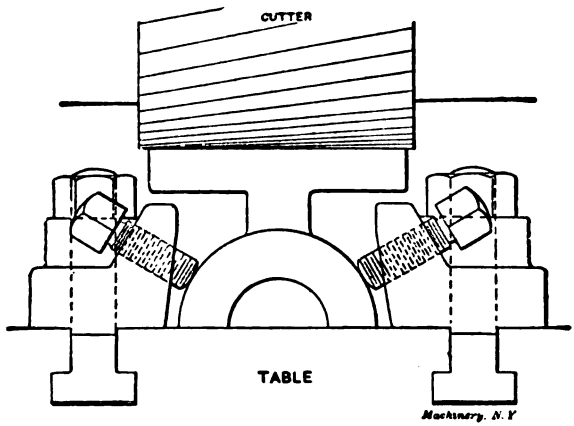

Fig. 69. Simple Holding Device used when Slab Milling the Lower Surface of the Base

must be accomplished by cutters that are so constructed that the chip is broken up into short cuts, giving the operation the advantage of the single pointed tool in the question of power required, and truth of surface obtained. This is accomplished by notching the teeth of the cutter so that they may be presented to the work successively, both

notches and teeth being cut spiral at right angles with each other. A surface produced by such a cutter will bear the strictest examinations as to truth.

Fig. 69 shows one method of machining the bottom surface. In this method we use a plain milling cutter as shown, taking one or two cuts as the case may require. If very little stock has to be removed but one cut ought to be sufficient, as the resulting surface will be good enough for the intended purpose. As will be seen the piece is held down and prevented from moving sideways by the screws which are tapped through the strips bolted to the table. This makes a convenient method and one that will be found to answer the purpose very well. Another method of performing the operation is by the use of

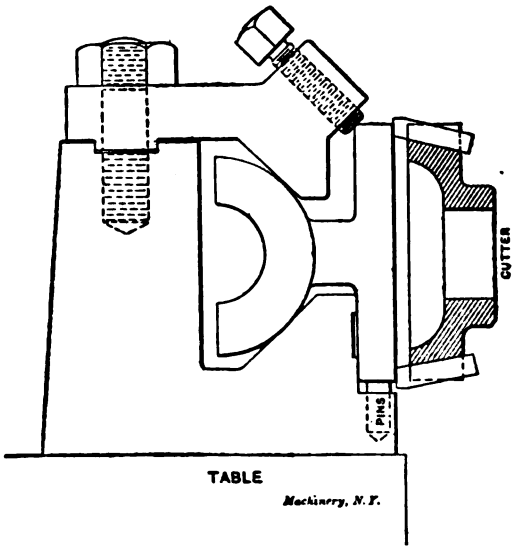

Fig. 70. Alternative Method of Holding the Base when Milling the Lower Surface

an end mill as shown in Fig. 70. This means of removing the metal is very efficient, as a very true surface can be obtained with a much faster feed and deeper cut than can be done by slab milling. The power necessary to revolve the cutter and force the feed is also very much less than that used for slab milling. While the surface may be badly marked it will yet be almost absolutely true. When the work is set up on the edge as shown, no trouble is encountered with the chips, as is otherwise the case. We are fortunate in finding this piece to be a very easy one to provide jigs for, as it permits itself to be set in almost any position. The method used in Fig. 70 is a good one, and will be found very convenient. The top clamp is removed when the work has to be removed or placed in position. This clamp serves the double purpose of holding the work and of setting it in line, the screw being used to make any allowance for variations in the castings. When this

method is chosen the machining of the bottom should be done before the cap bearing is milled, as this gives a good solid setting for the latter operation. A great many operations may be accomplished by this latter method, which are now milled with plain cutters. The action of the cutter in this operation closely resembles that of the single pointed tool and has all the advantages that are claimed for this tool, but very few of the disadvantages, it being a multiple cutter, which means greater output.

The last four cuts shown leave considerable to the imagination, as they show but an end view of the work. This is done because the same method may be used to advantage in holding one or a dozen pieces. Elaboration of the idea does not seem necessary, since the principle is shown.*

* John Edgar, November, 1906.

No. 50. Principles and Practice of Assembling Machine Tools, Part I.

No. 51. Principles and Practice of Assembling Machine Tools, Part II.

No. 52. Advanced Shop Arithmetic for the Machinist.

No. 53. Use of Logarithms and Logarithmic Tables.

No. 54. Solution of Triangles, Part I. —Methods, Rules and Examples.

No. 55. Solution of Triangles, Part II. —Tables of Natural Functions.

No. 56. Ball Bearings.—Principles of Design and Construction.

No. 57. Metal Spinning.—Machines, Tools and Methods Used.

No. 58. Helical and Elliptic Springs.—Calculation and Design.

No. 59. Machines, Tools and Methods of Automobile Manufacture.

No. 60. Construction and Manufacture of Automobiles.

No. 61. Blacksmith Shop Practice.—Model Blacksmith Shop; Welding; Forging of Hooks and Chains; Miscellaneous.

No. 62. Hardness and Durability Testing of Metals.

No. 63. Heat Treatment of Steel.—Hardening, Tempering, Case-Hardening.

No. 64. Gage Making and Lapping.

No. 65. Formulas and Constants for Gas Engine Design.

No. 66. Heating and Ventilation of Shops and Offices.

No. 67. Boilers.

No. 68. Boiler Furnaces and Chimneys.

No. 69. Feed Water Appliances.

No. 70. Steam Engines.

No. 71. Steam Turbines.

No. 72. Pumps, Condensers, Steam and Water Piping.

No. 73. Principles and Applications of Electricity, Part I.—Static Electricity; Electrical Measurements; Batteries.

No. 74. Principles and Applications of Electricity, Part II.—Magnetism; Electro-Magnetism; Electro-Plating.

No. 75. Principles and Applications of Electricity, Part III.—Dynamos; Motors; Electric Railways.

No. 76. Principles and Applications of Electricity, Part IV.—Electric Lighting.

No. 77. Principles and Applications of Electricity, Part V.—Telegraph and Telephone.

No. 78. Principles and Applications of Electricity, Part VI.—Transmission of Power.

No. 79. Locomotive Building, Part I.—Main and Side Rods.

No. 80. Locomotive Building, Part II. —Wheels; Axles; Driving Boxes.

No. 81. Locomotive Building, Part III. —Cylinders and Frames.

No. 82. Locomotive Building, Part IV. —Valve Motion.

No. 83. Locomotive Building, Part V. —Boiler Shop Practice.

No. 84. Locomotive Building, Part VI. —Erecting.

No. 85. Mechanical Drawing, Part I. —Instruments; Materials; Geometrical Problems.

No. 86. Mechanical Drawing, Part II. —Projection.

No. 87. Mechanical Drawing, Part III. —Machine Details.

No. 88. Mechanical Drawing, Part IV. —Machine Details.

No. 89. The Theory of Shrinkage and Forced Fits.

No. 90. Railway Repair Shop Practice.

No. 91. Operation of Machine Tools.—The Lathe, Part I.

No. 92. Operation of Machine Tools.—The Lathe, Part II.

No. 93. Operation of Machine Tools.—Planer, Shaper, Slotter.

No. 94. Operation of Machine Tools.—Drilling Machines.

No. 95. Operation of Machine Tools.—Boring Machines.

No. 96. Operation of Machine Tools.—Milling Machines, Part I.

No. 97. Operation of Machine Tools.—Milling Machines, Part II.

No. 98. Operation of Machine Tools.—Grinding Machines.

No. 99. Automatic Screw Machine Practice, Part I.—Operation of the Brown & Sharpe Automatic Screw Machine.

No. 100. Automatic Screw Machine Practice, Part II.—Designing and Cutting Cams for the Automatic Screw Machine.

No. 101. Automatic Screw Machine Practice, Part III.—Circular Forming and Cut-off Tools.

No. 102. Automatic Screw Machine Practice, Part IV.—External Cutting Tools.

No. 103. Automatic Screw Machine Practice, Part V—Internal Cutting Tools.

No. 104. Automatic Screw Machine Practice, Part VI.—Threading Operations.

No. 105. Automatic Screw Machine Practice, Part VII.—Knurling Operations.

No. 106. Automatic Screw Machine Practice, Part VIII.—Cross Drilling, Burring and Slotting Operations.

ADDITIONAL TITLES WILL BE ANNOUNCED IN MACHINERY FROM TIME TO TIME

MACHINERY'S DATA SHEET SERIES

MACHINERY'S Data Sheet Books include the well-known series of Data Sheets originated by MACHINERY, and issued monthly as supplements to the publication; of these Data Sheets over 500 have been published, and 6,000,000 copies sold. Revised and greatly amplified, they are now presented in book form, kindred subjects being grouped together. The purchaser may secure either the books on those subjects in which he is specially interested, or, if he pleases, the whole set at one time. The price of each book is 25 cents (one shilling) delivered anywhere in the world.

CONTENTS OF DATA SHEET BOOKS

No. 1. Screw Threads.—United States, Whitworth, Sharp V- and British Association Standard Threads; Briggs Pipe Thread; Oil Well Casing Gages; Fire Hose Connections; Acme Thread; Worm Threads; Metric Threads; Machine, Wood, and Lag Screw Threads; Carriage Bolt Threads, etc.

No. 2. Screws, Bolts and Nuts.—Fillister-head, Square-head, Headless, Collar-head and Hexagon-head Screws; Standard and Special Nuts; T-nuts, T-bolts and Washers; Thumb Screws and Nuts; A. L. A. M. Standard Screws and Nuts; Machine Screw Heads; Wood Screws; Tap Drills; Lock Nuts; Eye-bolts, etc.

No. 3. Taps and Dies.—Hand, Machine, Tapper and Machine Screw Taps; Taper Die Taps; Sellers Hobs; Screw Machine Taps; Straight and Taper Boiler Taps; Stay-bolt, Washout, and Patch-bolt Taps; Pipe Taps and Hobs; Solid Square, Round Adjustable and Spring Screw Threading Dies.

No. 4. Reamers, Sockets, Drills and Milling Cutters.—Hand Reamers; Shell Reamers and Arbors; Pipe Reamers; Taper Pins and Reamers; Brown & Sharpe, Morse and Jarno Taper Sockets and Reamers; Drills; Wire Gages; Milling Cutters; Setting Angles for Milling Teeth in End Mills and Angular Cutters, etc.

No. 5. Spur Gearing.—Diametral and Circular Pitch; Dimensions of Spur Gears; Tables of Pitch Diameters; Odontograph Tables; Rolling Mill Gearing; Strength of Spur Gears; Horsepower Transmitted by Cast-iron and Rawhide Pinions; Design of Spur Gears; Weight of Cast-iron Gears; Epicyclic Gearing.

No. 6. Bevel, Spiral and Worm Gearing.—Rules and Formulas for Bevel Gears; Strength of Bevel Gears; Design of Bevel Gears; Rules and Formulas for Spiral Gearing; Tables Facilitating Calculations; Diagram for Cutters for Spiral Gears; Rules and Formulas for Worm Gearing, etc.

No. 7. Shafting, Keys and Keyways.—Horsepower of Shafting; Diagrams and Tables for the Strength of Shafting; Forcing, Driving, Shrinking and Running Fits; Woodruff Keys; United States Navy Standard Keys; Gib Keys; Milling Keyways; Duplex Keys.

No. 8. Bearings, Couplings, Clutches, Crane Chain and Hooks.—Pillow Blocks; Babbitted Bearings; Ball and Roller Bearings; Clamp Couplings; Plate Couplings; Flange Couplings; Tooth Clutches; Crab Couplings; Cone Clutches; Universal Joints; Crane Chain; Chain Friction; Crane Hooks; Drum Scores.

No. 9. Springs, Slides and Machine Details.—Formulas and Tables for Spring Calculations; Machine Slides; Machine Handles and Levers; Collars; Hand Wheels; Pins and Cotters; Turn-buckles, etc.

No. 10. Motor Drive, Speeds and Feeds, Change Gearing, and Boring Bars.—Power required for Machine Tools; Cutting Speeds and Feeds for Carbon and High-speed Steel; Screw Machine Speeds and Feeds; Heat Treatment of High-speed Steel Tools; Taper Turning; Change Gearing for the Lathe; Boring Bars and Tools, etc.

No. 11. Milling Machine Indexing, Clamping Devices and Planer Jacks.—Tables for Milling Machine Indexing; Change Gears for Milling Spirals; Angles for setting Indexing Head when Milling Clutches; Jig Clamping Devices; Straps and Clamps; Planer Jacks.

No. 12. Pipe and Pipe Fittings.—Pipe Threads and Gages; Cast-iron Fittings; Bronze Fittings; Pipe Flanges; Pipe Bends; Pipe Clamps and Hangers; Dimensions of Pipe for Various Services, etc.

No. 13. Boilers and Chimneys.—Flue Spacing and Bracing for Boilers; Strength of Boiler Joints; Riveting; Boiler Setting; Chimneys.

No. 14. Locomotive and Railway Data.—Locomotive Boilers; Bearing Pressures for Locomotive Journals; Locomotive Classifications; Rail Sections; Frogs, Switches and Cross-overs; Tires; Tractive Force; Inertia of Trains; Brake Levers; Brake Rods, etc.

No. 15. Steam and Gas Engines.—Saturated Steam; Steam Pipe Sizes; Steam Engine Design; Volume of Cylinders; Stuffing Boxes; Setting Corliss Engine Valve Gears; Condenser and Air Pump Data; Horsepower of Gasoline Engines; Automobile Engine Crankshafts, etc.

No. 16. Mathematical Tables.—Squares of Mixed Numbers; Functions of Fractions; Circumference and Diameters of Circles; Tables for Spacing off Circles; Solution of Triangles; Formulas for Solving Regular Polygons; Geometrical Progression, etc.

No. 17. Mechanics and Strength of Materials.—Work; Energy; Centrifugal Force; Center of Gravity; Motion; Friction; Pendulum; Falling Bodies; Strength of Materials; Strength of Flat Plates; Ratio of Outside and Inside Radii of Thick Cylinders, etc.

No. 18. Beam Formulas and Structural Design.—Beam Formulas; Sectional Moduli of Structural Shapes; Beam Charts; Net Areas of Structural Angles; Rivet Spacing; Splices for Channels and I-beams; Stresses in Roof Trusses, etc.

No. 19. Belt, Rope and Chain Drives.—Dimensions of Pulleys; Weights of Pulleys; Horsepower of Belting; Belt Velocity; Angular Belt Drives; Horsepower transmitted by Ropes; Sheaves for Rope Drive; Bending Stresses in Wire Ropes; Sprockets for Link Chains; Formulas and Tables for Various Classes of Driving Chain.

No. 20. Wiring Diagrams, Heating and Ventilation, and Miscellaneous Tables.—Typical Motor Wiring Diagrams; Resistance of Round Copper Wire; Rubber Covered Cables; Current Densities for Various Contacts and Materials; Centrifugal Fan and Blower Capacities; Hot Water Main Capacities; Miscellaneous Tables: Decimal Equivalents, Metric Conversion Tables, Weights and Specific Gravity of Metals, Weights of Fillets, Drafting-room Conventions, etc.

MACHINERY, the monthly mechanical journal, originator of the Reference and Data Sheet Series, is published in three editions—the *Shop Edition*, $1.00 a year; the *Engineering Edition*, $2.00 a year, and the *Foreign Edition*, $3.00 a year.

The Industrial Press, Publishers of MACHINERY,

49-55 Lafayette Street, New York City, U. S. A.

PRICE 25 CENTS

FIRST PRINCIPLES OF THEORETICAL MECHANICS

BY LESTER G. FRENCH

THIRD REVISED EDITION

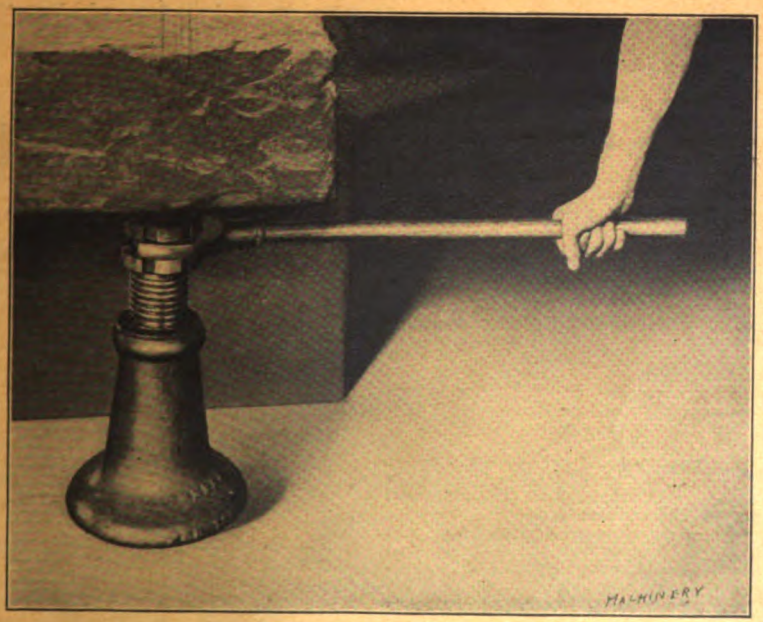

MACHINERY'S REFERENCE SERIES—NO. 5
PUBLISHED BY MACHINERY, NEW YORK

MACHINERY'S REFERENCE BOOKS

This treatise is one unit in a comprehensive Series of Reference books originated by MACHINERY, and including an indefinite number of compact units, each covering one subject thoroughly. The whole series comprises a complete working library of mechanical literature in which the Mechanical Engineer, the Master Mechanic, the Designer, the Machinist and Tool-maker will find the special information he wishes to secure, selected, carefully revised and condensed for him. The books are sold singly or in complete sets, as may be desired. The price of each book is 25 cents (one shilling) delivered anywhere in the world.

LIST OF REFERENCE BOOKS

No. 1. Worm Gearing.—Calculating Dimensions for Worm Gearing; Hobs for Worm Gears; Location of Pitch Circle; Self-Locking Worm Gearing, etc.

No. 2. Drafting-Room Practice.—Drafting-Room System; Tracing, Lettering and Mounting; Card Index Systems.

No. 3. Drill Jigs.—Elementary Principles of Drill Jigs; Drilling Jig Plates; Examples of Drill Jigs; Jig Bushings; Using Jigs to Best Advantage.

No. 4. Milling Fixtures.—Elementary Principles of Milling Fixtures; Collection of Examples of Milling Fixture Design, from practice.

No. 5. First Principles of Theoretical Mechanics.

No. 6. Punch and Die Work.—Principles of Punch and Die Work; Suggestions for the Making and Use of Dies; Examples of Die and Punch Design.

No. 7. Lathe and Planer Tools.—Cutting Tools for Planer and Lathe; Boring Tools; Shape of Standard Shop Tools; Forming Tools.

No. 8. Working Drawings and Drafting Room Kinks.

No. 9. Designing and Cutting Cams.—Drafting of Cams; Cam Curves; Cam Design and Cam Cutting; Suggestions in Cam Making.

No. 10. Examples of Machine Shop Practice.—Cutting Bevel Gears with Rotary Cutters; Making a Worm-Gear; Spindle Construction.

No. 11. Bearings.—Design of Bearings; Causes of Hot Bearings; Alloys for Bearings; Friction and Lubrication; Friction of Roller Bearings.

No. 12. Mathematics of Machine Design.—Compiled with special reference to shafting and efficiency of hoisting machinery.

No. 13. Blanking Dies.—Making Blanking Dies; Blanking and Piercing Dies; Construction of Split Dies; Novel Ideas in Die Making.

No. 14. Details of Machine Tool Design.—Cone Pulleys and Belts; Strength of Countershafts; Tumbler Gear Design; Faults of Iron Castings.

No. 15. Spur Gearing.—Dimensions; Design; Strength; Durability.

No. 16. Machine Tool Drives.—Speeds and Feeds of Machine Tools; Geared or Single Pulley Drives; Drives for High Speed Cutting Tools.

No. 17. Strength of Cylinders—Formulas, Charts, and Diagrams.

No. 18. Shop Arithmetic for the Machinist.—Tapers; Change Gears; Cutting Speeds; Feeds; Indexing; Gearing for Cutting Spirals; Angles.

No. 19. Use of Formulas in Mechanics.—With numerous applications.

No. 20. Spiral Gearing.—Rules, Formulas, and Diagrams, etc.

No. 21. Measuring Tools.—History and Development of Standard Measurements; Special Calipers; Compasses; Micrometer Tools; Protractors, etc.

No. 22. Calculation of Elements of Machine Design.—Factor of Safety; Strength of Bolts; Riveted Joints; Keys and Keyways; Toggle-joints.

No. 23. Theory of Crane Design.—Jib Cranes; Calculation of Shaft, Gears, and Bearings; Force Required to Move Crane Trolleys; Pillar Cranes.

No. 24. Examples of Calculating Designs.—Charts in Designing; Punch and Riveter Frames; Shear Frames; Billet and Bar Passes; etc.

No. 25. Deep Hole Drilling.—Methods of Drilling; Construction of Drills.

No. 26. Modern Punch and Die Construction.—Construction and Use of Subpress Dies; Modern Blanking Die Construction; Drawing and Forming Dies.

No. 27. Locomotive Design, Part I.—Boilers, Cylinders, Pipes and Pistons.

No. 28. Locomotive Design, Part II.—Stephenson Valve Motion; Theory, Calculation and Design of Valve Motion; The Walschaerts Valve Motion.

No. 29. Locomotive Design, Part III.—Smokebox; Exhaust Pipe; Frames; Cross-heads; Guide Bars; Connecting-rods; Crank-pins; Axles; Driving-wheels.

No. 30. Locomotive Design, Part IV.—Springs, Trucks, Cab and Tender.

No. 31. Screw Thread Tools and Gages.

No. 32. Screw Thread Cutting.—Lathe Change Gears; Thread Tools; Kinks.

No. 33. Systems and Practice of the Drafting-Room.

No. 34. Care and Repair of Dynamos and Motors.

No. 35. Tables and Formulas for Shop and Drafting-Room.—The Use of Formulas; Solution of Triangles; Strength of Materials; Gearing; Screw Threads; Tap Drills; Drill Sizes; Tapers; Keys; Jig Bushings, etc.

No. 36. Iron and Steel.—Principles of Manufacture and Treatment.

No. 37. Bevel Gearing.—Rules and Formulas; Examples of Calculation; Tooth Outlines; Strength and Durability; Design; Methods of Cutting Teeth.

No. 38. Grinding and Grinding Machines.

(See inside back cover for additional titles)

MACHINERY'S REFERENCE SERIES

EACH NUMBER IS ONE UNIT IN A COMPLETE LIBRARY OF MACHINE DESIGN AND SHOP PRACTICE REVISED AND REPUBLISHED FROM MACHINERY

NUMBER 5

FIRST PRINCIPLES OF THEORETICAL MECHANICS

By LESTER G. FRENCH

THIRD REVISED EDITION

CONTENTS

Matter, Work, Force and Power - - - - - - 3
Friction - - - - - - - - - - - 7
Gravity - - - - - - - - - - - - 11
Moments - - - - - - - - - - - 17
The Mechanical Powers - - - - - - - - 21
Graphical Representation of Forces - - - - 26
Motion and Mass - - - - - - - - - 28
Falling Bodies - - - - - - - - - 33
The Pendulum - - - - - - - - - - 35
Energy - - - - - - - - - - - 37

Copyright, 1912, The Industrial Press, Publishers of MACHINERY
49-55 Lafayette Street, New York City

CHAPTER I

MATTER, WORK, FORCE AND POWER*

Mechanics is that branch of science which treats of the action of force, and of its effects. A *force* is commonly defined as any cause tending to produce or modify motion. Its action is always equivalent to a push or pull, such as is exerted when we use our muscles, and until we have made some progress in the study of the subject, it will be simpler to consider force in this sense, simply, without regard to its effects. For the present, therefore, a force may be defined as any cause producing a push or a pull. There are many familiar examples of force, as muscular effort, gravity, the expansive force of steam, the elasticity of a spring, the attraction of a magnet, etc.

The unit by which force is usually measured is the standard pound, avoirdupois; that is, the common pound. A force of 100 pounds is one capable of sustaining a weight of 100 pounds. It will appear hereafter that the weight of the pound varies with the locality, so that this unit is not an absolute one. The variation is so slight, however, that it is of no consequence, except in very accurate physical investigations.

Matter

The material of which anything is composed is called *matter*. The term is a collective one, and is used when no particular substance is referred to. Lead, iron, water, air, or any other substance is spoken of in a general way as "matter."

Matter exists in three states: the solid, the liquid, and the gaseous. A *solid*, of which wood and iron are examples, is characterized by a tendency to resist any attempt to change either its shape or size. A *liquid* readily changes its shape, but its volume or size remains constant under the same temperature conditions. A pint of water will fill a pint vessel of any shape, but it cannot be forced into a vessel holding less than a pint.† A *gas* has neither definite shape nor definite volume. It will accommodate itself in any shape, like a liquid, can be compressed easily, and will also expand into a larger space. Air, oxygen, nitrogen and hydrogen are examples of gases.

Since force can act upon all three forms of matter, the subject of mechanics is divided into the mechanics of solids, the mechanics of liquids or hydraulics, and the mechanics of gases, or pneumatics. For the present, only the mechanics of solids will be considered.

A *body* is a definite portion of matter, as a pound of lead, an iron bar, a quart of water, or a cubic foot of air. It is believed that all bodies are made up of extremely small portions of matter, called *mole-*

* MACHINERY, October, 1895.

† Liquids are very slightly compressible. Water will diminish about 0.00005 in volume under a pressure of 15 pounds per square inch.

cules, which are separated from one another by distances that are great compared with their size. These molecules are so minute that it is impossible to detect them, even with the most powerful microscope; but there are many facts determined by experiment, that make their existence seem very probable. If the speculations of scientists are correct, at least 500,000 molecules could be placed in a row between the measuring surfaces of a micrometer caliper, when it is set to read 0.001 inch. A molecule is the smallest portion of matter that can exist and still retain the properties of the substance of which it is a part.

It is believed, further, that every molecule contains two or more indivisible portions of matter, called *atoms*. Thus a molecule of water is composed of two atoms of hydrogen gas and one atom of oxygen gas. A molecule can be separated into its atoms by chemical action only, and then the separation is only momentary, for the atoms at once combine to form other molecules, usually of a different nature. The atom is purely a chemical unit; we are not concerned with it in mechanics.

Molecular Forces

Two opposing forces reside in the molecules—an attractive force that binds the molecules together, and a repellent force, that tends to push them apart. The three states of matter, solid, liquid, and gaseous, depend upon the relation of these forces. If the attractive force predominates, the body is solid; if the repellent, it is gaseous; if the two are nearly balanced, it is liquid.

The repellent force is probably one manifestation of the phenomenon which we call heat. Thus, when a bar of steel is heated, the attractive force is gradually overcome by the repellent force, as is seen in the expansion and finally in the melting of the bar. So, also, if we heat a piece of ice, the ice is turned to water, and at last, when the repellent force becomes very strong, the water is turned into steam.

The attractive force is capable of acting not only between molecules of the same kind and in the same body, but between the surfaces of different bodies which are in contact, as well. In the former case it is called *cohesion*, and, in the latter, *adhesion*. It is cohesion that resists any attempt to pull apart a body, like a string or a wire, and adhesion that holds together bodies that stick to one another, as in the case of two pieces of wood, when united by glue, or of drops of rain on a window-pane, pencil or ink marks on a piece of paper, etc. The effect of adhesion is usually more noticeable between solids and liquids than elsewhere. Neither force will act, except at insensible distances. To join two pieces of iron, for example, welding must be resorted to, in which process the hammering brings the molecules in the two parts near enough together for the cohesive force to take effect. Adhesion and cohesion are of the same nature, the difference between them being one of name or definition rather than of kind. Two absolutely smooth surfaces, if such were possible, would adhere to one another perfectly, since their contact would be perfect, and it

might then as properly be said that the adjoining particles were held together by cohesion as by adhesion.

Work and Power

The terms force, work and power are of frequent occurrence in mechanics, and are oftentimes misused. As a definition of force has just been given, it will be advantageous to now take up the subjects of work and power, so that the meanings of the three may be compared and thus firmly impressed upon the memory.

Work

Work is said to be performed when a force produces motion in opposition to a resistance. Force has one element only, namely, the push or pull exerted. Work is the result of the two elements, force and motion. When no motion results from the action of a force, no work is done. A jack-screw supporting a weight does no work, except when the screw is turned so as to raise the weight. Likewise, no mechanical work results when a man pushes against a heavy body which he is unable to move, however much it may seem like work to him in the common acceptance of the term. Should he push with equal force against a smaller body, however, and move it, work would be performed.

Measurement of Work

(*a*) In order to calculate the work done, the magnitude of the force applied is measured in pounds and the distance moved in feet. The product of these quantities, obtained by multiplying them together, is the work in *foot-pounds*. Or, briefly stated,

$$Work = force \times distance. \qquad (1)$$

The foot-pound is called the *unit of work*, and may be defined as the work done by a force of one pound acting through a distance of one foot.

(*b*) In the estimation of work it is sometimes more convenient to multiply the resistance overcome by the distance, than to multiply the force applied by the distance, in which case

$$Work = resistance \times distance. \qquad (2)$$

It is clear that the resistance and the force applied must always be equal, so that it makes no numerical difference which method is used. For example, if a man raises a weight of 10 pounds through a certain height, he performs work. The resistance of the weight is equal to 10 pounds, and the force that he exerts is just sufficient to raise it, or equal to 10 pounds, also.

(*c*) The simplest example of work is that just cited, of a weight raised against the force of gravity. When solving such examples, care must be taken always to multiply the weight by the *vertical* height through which it moves. Thus, in Fig. 1, suppose the ball B to be rolled from the bottom to the top of the inclined plane. If W represent the weight of the ball and h the height that it is raised, the work done upon the ball would be $W \times h$. It is true that the ball has moved through the distance l, but the force required to roll the ball through

this distance, and which acts in the direction of the arrow, is less than the weight *W*, and hence, if *W* were multiplied by *l*, the result would be too great. If it were known, however, what force, acting in the direction of the arrow, was required to roll the ball, then this force, multiplied by *l*, would give the work.

Power

From what has been said upon work, it is plain that a force, however small, can perform any required amount of work, provided time

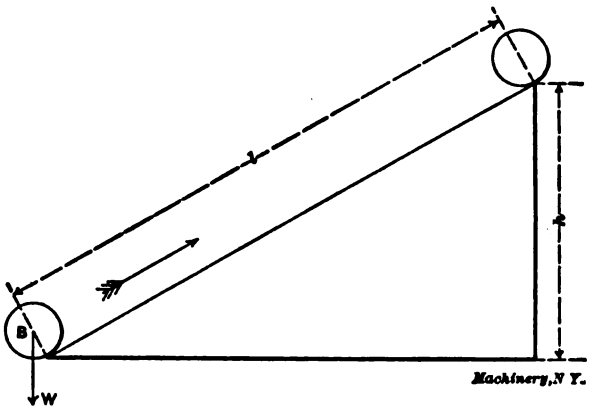

Fig. 1

enough be allowed. A toy engine, for example, might do 1,000,000 foot-pounds of work in a few hours, while an engine of moderate proportions would accomplish as much during a few strokes of the piston. Foot-pounds of work, merely, with time left out of account, would form no basis by which the capacities of the two engines could be compared. Hence, to compare the work done, either by or upon some agent, the time required must be considered.

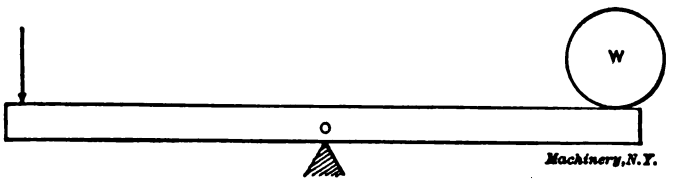

Fig. 2

The term *power* is employed to indicate the quantity of work done in a given time. "One million foot-pounds" is an expression indicating work; 1,000,000 foot-pounds of work performed in a day, or an hour or minute indicates power. Work has the two elements, force and the distance through which the force acts; power has three elements: force, distance, and time.

The unit of power adopted for engineering work is the *horse-power* (abbreviated H. P.). One horse-power is equal to 33,000 foot-pounds

per minute, or it may be said to equal 33,000 pounds raised one foot in a minute.* Hence, to find the horse-power when work is done, divide the number of foot-pounds of work done in one minute by 33,000.

Lest it lead to confusion when met with, it should here be stated that the term power is frequently used by writers on mechanics in the sense of force. In the so-called "mechanical powers," such as the lever, wheel and axle, wedge, screw, etc., it is quite usual to speak of the applied force as the power. Thus, the bar or lever shown in Fig. 2 is pivoted at *O* and at the end bears the weight *W*. At the other end a force, such as the pressure of the hand, acts downward in the direction of the arrow, and thus supports or raises the weight *W*. This pressure, which is the applied force, is what is called the power. Such use of the word, when force is what is meant, is ambiguous and can easily be avoided.

CHAPTER II

FRICTION†

Friction is the surface resistance which opposes the motion of one body upon another. It must be regarded as a force, although it is not always natural to think of it as such, for the reason, perhaps, that its action in resisting motion is of a negative character. The force of friction always acts in a direction parallel to the surfaces in contact. Thus, in Fig. 3, in pulling the block *B* along the surface, as shown, the frictional resistance is exerted in an opposite direction and parallel to the surfaces, as indicated by the arrow *F*.

Friction should not be confounded with adhesion, which not only resists the motion of one body upon another, but tends to hold the two together so that they cannot be separated. Adhesion is independent of the pressure between the bodies, while friction increases with the pressure. Moreover, the smoother the rubbing surfaces the less the friction; two perfectly smooth surfaces, if such were possible, would be frictionless, while, as has been previously stated, the adhesion between them would be very great. Lubricants increase the adhesion and diminish the friction. When the pressure between two bodies is small, the adhesion forms a considerable part of the resistance, and as the pressure increases, it becomes proportionately less, since adhesion does not increase with the pressure. At ordinary pressures the effect of

* The horse-power unit was introduced by James Watt, the great improver of the steam engine, for the purpose of designating the power developed by his engines. He had ascertained by experiments that an average cart horse could develop 22,000 foot-pounds of work per minute, and being anxious to give good value to the purchasers of his engines he added 50 per cent to this amount, thus obtaining (22,000 + 11,000) the 33,000 foot-pounds per minute unit by which the power of steam and other engines has ever since been estimated.—*Jamieson's Applied Mechanics.*

† MACHINERY, November, 1895.

adhesion can generally be neglected, and the whole resistance considered as the friction.

Kinds of Friction

(*a*) A distinction is usually made between *friction of rest* and *friction of motion*, the former being the frictional resistance to be overcome in starting a body into motion, and the latter the resistance that continually accompanies the motion. Friction of rest is generally greater than friction of motion, other conditions being equal.

(*b*) When friction is mentioned, *sliding friction* is understood, *i.e.*, such as that between an engine crosshead and its guides, or between a journal and its bearing. It is due to the roughness of the surfaces in contact. Whenever wheels are employed, or rollers or balls placed between the surfaces, the resistance is called *rolling friction*, the nature of which is somewhat different; it is then due to the fact that the rolling body makes a greater or less depression in the surface of the other, so that it has continually to rise out of a hollow, as it were.

(*c*) Frictional resistance also occurs between the molecules of

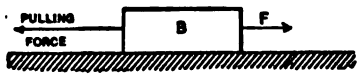

Fig. 3

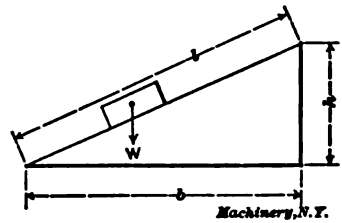

Fig. 4

liquids and gases, or between them and any solid body with which they may be in contact, as in the case of air when blown through a pipe, or a ship when sailing. This kind of resistance is called *fluid friction*. Its action is very different from that of the friction of solid bodies, and it is different in its nature.

Laws of Friction

Certain conclusions have been drawn from early experiments upon friction, which are known as the laws of friction. They are only approximately true, however, and apply only within certain limits. Outside of those limits they have been proved by later experiments to vary, in some cases very widely. They are:

(1) Friction is proportional to the normal pressure between the surfaces.

(2) It is independent of the areas, or sizes, of the rubbing surfaces.

(3) It is independent of the velocity of motion, though friction of rest is greater than friction of motion.

In law 1, by "normal pressure" is meant the pressure in a direction at right angles to the surface. If an object rests upon a horizontal plane, like the top of a table, the normal pressure is equal to its weight. If it rests upon an inclined plane, as in Fig. 4, the normal pressure (at right angles to the inclined plane) is found by dividing

the horizontal distance b by the length l of the plane, and multiplying the result by the weight W of the object, or

$$\text{Pressure} = \frac{b}{l} \times W \qquad (3)$$

Law 1, therefore, means that for any increase or diminution of the perpendicular pressure, the friction varies in the same ratio; thus, if the pressure is doubled or tripled, the friction becomes two or three times as great. Law 3 varies most widely at high velocities, which tend to diminish the friction. In order that these laws shall hold, the velocity of motion of the sliding pieces must be comparatively slow, the surfaces must have little or no lubrication, and the normal pressure must be great enough so that the effect of adhesion will be inappreciable, but not so great as to cause the surfaces to "seize."

It is not intended to treat of fluid friction here, but it will be convenient to have the laws for comparison with those just given. The three most important laws are as follows:

(1) Fluid friction is independent of the pressure.

(2) It is proportional to the area of the rubbing surfaces.

(3) It is proportional to the square of the velocity at moderate and high speeds, and to the velocity, nearly, at low speed.

The friction of lubricated surfaces departs widely from any set of laws. Where the lubricant is very freely supplied, the friction depends upon the nature of the lubricant more than upon the material of the surfaces. As the surfaces become dry, the friction becomes like that of solid bodies; and when they are flooded with oil, it is more nearly like fluid friction. The friction of lubricated bearings, therefore, has become a subject of entirely independent investigations, and cannot be treated in a general way like the dry friction of solid bodies.

Coefficient of Friction

If it should require a force of 10 pounds to pull a wooden block weighing 20 pounds along the surface of a board, the frictional resistance would be ½ or 0.5 of the normal pressure. Again, if a weight of 40 pounds were added to the block, making a total weight of 60 pounds, we know from law 1 that the resistance would be three times as great, or 30 pounds, which is still 0.5 of the pressure; and so, for any weight within the limit of law 1 the ratio of the friction to the pressure would remain this constant number 0.5. Knowing this, if it were desired to obtain the friction for any given weight of block, it would only be necessary to multiply the weight by 0.5, and if we had different numbers for different materials and various conditions, it would be very easy to calculate the friction for any particular case.

Any constant number like that above, which depends for its value upon the substance or conditions in question, is called a *coefficient*, and in the present case the *coefficient of friction*, which may be defined as that fraction of the normal pressure which is required to overcome the friction between two surfaces. *It is found by dividing the force*

of friction by the normal pressure. Or expressed as a formula,

Letting f = the coefficient of friction,

F = the force of friction,

P = the normal pressure,

$$f = \frac{F}{P} \tag{4}$$

The following coefficients of friction may be taken as average values where more complete tables are not at hand. Under varying conditions a wide variation from these values may be found, and where coefficients are to be used, they should be obtained, if possible, from experiments suited to the particular case.

Wood on wood, dry	0.4 to 0.6
Metals on metals, dry	0.15 to 0.2
Metals on metals, lubricated	0.03 to 0.08
Metals on wood, dry	0.5 to 0.6
Leather on metals, dry	0.3

If a body is placed on a plane surface, and the latter inclined until the body is just at the point of sliding down, the angle made by the plane with the horizontal at that instant is called the *angle of friction*, or the angle of repose. It can be shown that when the plane is at this point, its height divided by the base ($h \div b$ in Fig. 4) is equal to the coefficient of friction. This fact affords one means of finding the coefficient of friction of materials by experiment. Written as a formula, we have, f being the coeffcient of friction,

$$f = \frac{h}{b} \tag{5}$$

CHAPTER III

GRAVITY*

The attractive force that exists between the earth and all bodies at or near its surface is called *gravity*. Weight is due to gravity. A body has weight because it is pulled downward by the force of gravity, and the amount that it weighs is a measure of this pull. A piece of iron, for example, weighs one pound when it is of such a size and density that it is drawn to the earth by a force equal to that which attracts a standard pound weight.

As has been previously mentioned, the weight of a body (that is, the force by which it is attracted to the earth), varies slightly with the locality.

(*a*) Weight varies with the altitude. A body weighs the most at the surface of the earth, as the attraction is there the strongest. *Below the surface its weight decreases in the same ratio that its distance from the center of the earth decreases.* Thus, calling the radius of the earth 4,000 miles, the relative weight of a body at the surface and at one mile below the surface would be as 4,000 : 3,999; or at the latter point its weight would have diminished 1/4,000 part. *Above the surface, the weight decreases in the same ratio that the square of the distance from the center increases.* That is to say, if a body be carried from the surface to the top of a mountain one mile high, the relative weights in the two positions would be as $4{,}001^2 : 4{,}000^2$, or as 16,008,001 : 16,000,000. Its weight would therefore diminish about 8,000 parts in 16,000,000, or 1/2,000 part.

(*b*) Weight varies with the latitude, or distance north and south of the equator. In passing from the equator to either pole, the attraction of gravity increases by 1/568 of its original amount. This is due to the want of sphericity of the earth, the polar diameter being 26 miles shorter than the diameter at the equator. At the poles, however, a body would actually weigh more than this, or about 1/193 more than at the equator. The difference, 1/289, is due to the rotation of the earth on its axis, the effect of which is to produce a force directly opposite to that of gravity (centrifugal force), which is greatest at the equator and diminishes in moving from it, until at the poles it becomes nothing.

How Gravity Acts

Under the influence of gravity, all bodies tend to move in a direction toward the earth's center, or to "fall," as we say, our idea of "down" being always in a direction towards this point. Gravity, therefore, acts in the direction of lines converging or meeting at the center of the earth, a point so far distant, compared with the dimensions of any

* MACHINERY, November and December, 1895.

bodies that are likely to be considered, that these lines of action are always assumed to be parallel. The question naturally arises, at what point in a body does gravity act? The answer is, at every point. All bodies are composed of particles, each of which has weight, and consequently is attracted by gravity. A body, therefore, is really drawn downward by a large number of forces of gravity—as many as there are molecules in the body.

It is always assumed, however, that gravity acts as a *single force* at a point called the *center of gravity*. In Fig. 5 let the dots *p*, *p*, etc., represent particles of the body *B*, under the influence of forces of gravity, acting in parallel lines as shown by the direction of the arrows. Now, into whatever position this body be placed, there is always one

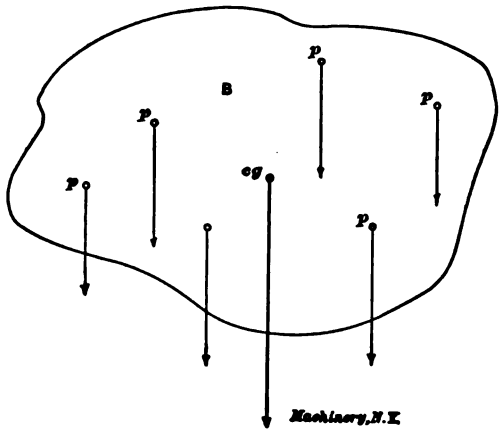

Fig. 5

invariable point through which the resultant of the attracting forces always passes. This point is called the center of gravity. It is a point, as *c g*, in Fig. 5, at which, if a single force of gravity were to act, in place of all the other forces, and equal in intensity to their sum, the effect upon the body would be the same as before. Again, since the intensity of the gravity force at each particle may be taken to represent its weight and the sum of these forces the weight of the body, we may consider the center of gravity as a point at which the weight of a body is concentrated.

Center of Gravity

We have in the previous paragraph given an explanation of the meaning of the term center of gravity. We will now consider some of the principles involved in finding this point, together with a few of their applications. A body suspended at its center of gravity will balance in whatever position it may be placed. For this reason, the center of gravity is sometimes defined as that point about which a body will balance, in any position. Any *homogeneous* body will balance about its center of magnitude; that is, about its central point. Hence, in the case of *regular* geometrical figures, the center of gravity

is readily determined, as the center of magnitude can usually be found by geometrical construction.

Center of Gravity of Geometrical Figures

The center of gravity of a line is at its middle point; of a circle, at its center; of a rectangle, at the intersection of two lines joining the opposite corners; of a sphere or ball, at its center; of a prism and cylinder, at the middle point of a line joining the centers of gravity of the two ends. To illustrate the last two cases, the center of gravity of a bar of any homogeneous material, four feet long, two inches wide and one inch thick, lies at a point two feet from one end, one inch from the edge and one-half inch from one side; and of a round bar of the same length, at a point on its axis two feet from one end.

The center of gravity of a triangle lies at the intersection of two

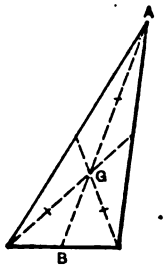

Fig. 6

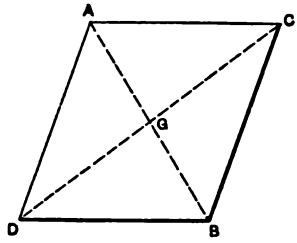

Fig. 7

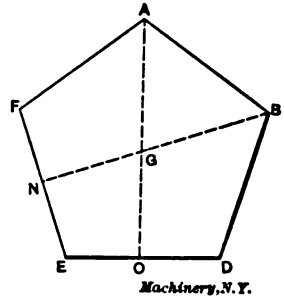

Machinery, N.Y.

Fig. 8

lines drawn from the vertices (points) of any two angles to the middle of the opposite sides (Fig. 6). This point may also be found by drawing one of the lines, as AB, and laying off two-thirds of its length from the vertex. Thus, the center of gravity G in the figure is at a distance AG from A, equal to two-thirds of the length of the line AB, and the same proportion holds with the lines drawn from the other two vertices.

The center of gravity of a parallelogram is at the intersection of its diagonals, as AB and CD in Fig. 7. A parallelogram is a figure having four sides, the opposite ones being equal and parallel.

The center of gravity of a cone or of a pyramid is on a line drawn from the vertex to the center of gravity of the base, and at a distance from the vertex equal to three-fourths of the length of the line.

A help in finding the center of gravity of a plane figure is the fact that, if it has an axis of symmetry, the center of gravity will lie at some point upon this axis, and if it has two such axes, the center of gravity will lie at their point of intersection.

A plane figure is here understood to be a flat, material body, that is very thin compared with its extent or area, such as figures cut out of paper or sheet metal. Strictly speaking, a plane figure has extent, but no thickness.

An axis of symmetry is a line so drawn across a figure that it

divides the latter into two parts, one of which would exactly coincide with the other, if the figure were folded over along this line. Thus, if the regular pentagon in Fig. 8 were folded about the line $A\,O$, the parts $A\,B\,D$ and $A\,F\,E$ would exactly coincide; and if it were folded about $B\,N$, parts $B\,A\,F$ and $B\,D\,E$ would coincide. Hence, $A\,O$ and $B\,N$ are axes of symmetry, and the center of gravity of the figure lies at their intersection, or at G.

Center of Gravity of Two or More Bodies

In Fig. 9 let the point G be the position of the center of gravity of the two bodies w and W. It must be so situated that they will balance about it, if rigidly connected. The turning effect exerted by each body about the point G is as though the weight of each were concentrated at its own center of gravity, and acted downward at that point as indicated by the arrows. Moreover, as will appear when the subjects of moments and levers have been studied, if w and W are to

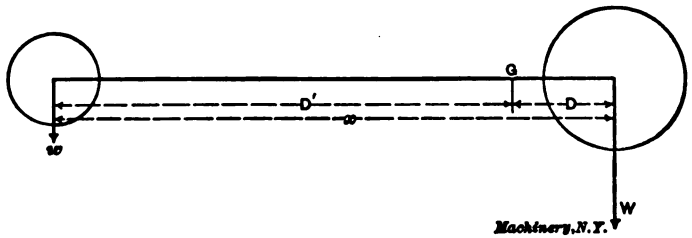

Fig. 9

balance, the ratio of the distances D' and D must be such that, calling w and W the weights of the two bodies, the proportion $w : D = W : D'$ will exist. Thus, if $w = 50$ pounds, W, 250 pounds, and D', 25 inches, then $50 : D = 250 : 25$, and $D = \dfrac{25 \times 50}{250} = 5$ inches.

The center of gravity lies upon a line connecting the center of gravity of each weight, and its distance D' from the smaller weight is expressed by the formula

$$D' = \frac{W\,x}{W + w} \qquad (6)$$

where x = the distance between the centers of gravity of the weights,
W = the weight of the larger body,
w = the weight of the smaller body.

Stated as a rule: *To find the distance D', multiply the larger weight by the distance between the centers of gravity of the two weights, and divide by the sum of the weights.*

Center of Gravity by Trial

If a body be suspended from a point, or otherwise supported so that it is free to vibrate and find its "own center," its center of gravity will place itself in the lowest possible position. If a piece of sheet metal

be freely suspended from a nail, for example, the center of gravity will lie in a vertical direction from beneath the point of support. This fact may be taken advantage of in order to find the center of gravity of a flat plate by trial. Suspend it from some point, as in Fig. 10, and from the same point hang the plumb-bob *B'*. When both have come to rest, hold the string against the plate, and, using it as a guide, draw a line *A B* across the plate. As the center of gravity falls vertically below the point of support, it must lie at some point in this line. Next, suspend the plate from some other convenient point (Fig.

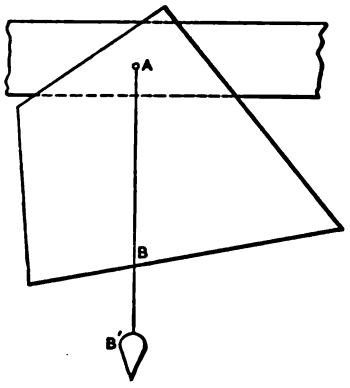

Fig. 10

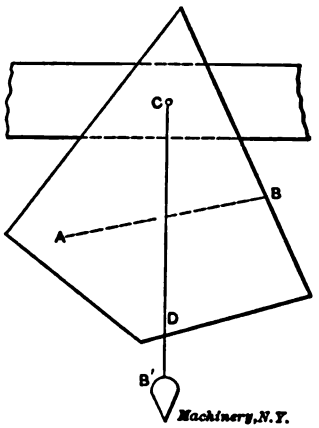

Fig. 11

11), and repeat the operation, drawing the line *C D*. The center of gravity must lie in this line, also, and hence its location is at the intersection of lines *A B* and *C D*, since this is the only point common to them both. Furthermore, no matter from how many points the plate might be suspended, the plumb-line would pass through this point of intersection. Two suspensions determine the point, however, and are all that are required.

Applications of Principles

(*a*) A body is said to be in equilibrium when it balances, or has no tendency to overturn. When acted upon solely by the force of gravity, the only condition necessary for the equilibrium of a body is that a vertical line through the center of gravity should pass through the point or surface which supports it. Thus, in Fig. 11, the plate is in equilibrium as drawn, and theoretically it would also be in equilibrium if it were turned half-way around, so that the center of gravity came directly above the point of support. In the former case, however, the equilibrium is said to be stable, while in the latter it is unstable. *Stable equilibrium exists where, on moving the body, the center of gravity ascends; and unstable equilibrium when it descends.* By swinging the plate of Fig. 11 about its point of support, the center of gravity would rise, and with the position of the plate reversed, if it were moved either way, the center of gravity would fall.

The case of bodies resting on a horizontal base is illustrated in Fig. 12. A leaning body, a chimney, for example, would remain in equilibrium so long as a vertical through its center of gravity passed within the base, as is the case here with the center of gravity at *G*. Moreover, the equilibrium would be stable, because the chimney, in overturning, would act as though pivoted at *O*, which is at the right of *G*, and therefore the center of gravity would have to ascend, slightly, along arc *GA*. Should the center of gravity be located at *G'*, the equilibrium would be unstable, because, at the moment of overturn-

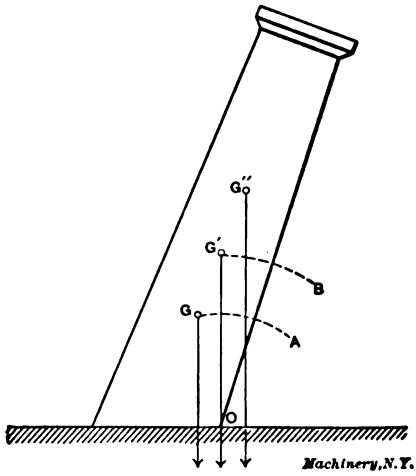

Fig. 12

ing, *G'* would begin to descend along the arc *G'B*. With the center of gravity at *G''*, the vertical falls without the base, and the chimney would overturn.

Equilibrium is said to be *neutral* when, upon moving a body, its center of gravity neither ascends nor descends. Examples: A flat plate suspended at its center of gravity; a cylinder, cone or sphere rolling upon a horzontal surface.

(*b*) A useful application is found in one of the theorems of Pappus, which is that the volume of any solid which can be generated by the revolution of the surface about an axis, is equal to the area of the surface multiplied by the circumference described by its center of gravity.

CHAPTER IV

MOMENTS*

The tendency of a force acting upon a body is, in general, to produce either a motion of translation (that is, to cause every part of the body to move in a straight line) or to produce a motion of rotation. A *moment*, in mechanics, is the measure of the turning effect of a force which tends to produce rotation. For example, suppose a force to act upon a body which is supported by a pivot. Unless the line of action of the force happens to pass through the pivot, the body will tend to rotate. Its tendency to rotate, moreover, will depend upon two things: (1) upon the magnitude of the force acting, and (2) upon the distance of the force from the pivot, *measuring along a line at right angles to the line of action of the force.* These two factors taken together always determine the turning effect, and their product is called the *moment* of the force.

To illustrate further, suppose the wrench shown in Fig. 13 to be in position No. 1, and that a person grasps it at point F and pulls in the direction of the arrow along the line $C D$, first with a force of 25 pounds, and then with a force of 50 pounds. The bolt O acts as a pivot and the tendency to turn the wrench and nut about it is twice as great in the latter as in the former case, because the first factor, namely, the magnitude of the force, has been increased twofold. Again, grasping the wrench at E and pulling along the line $A B$, its effectiveness would be lessened, for the reason that the second factor, or the distance, l, measured from the point O and at right angles to the line $A B$, is less than the distance f measured at right angles to line $C D$.

Finally, suppose the wrench to be in position No. 2, and to be grasped at the end at F, and to be pulled with a force of 50 pounds in the direction of line $I K$, parallel to lines $A B$ and $C D$. Here the wrench is held at the same point and pulled with the same force as at first, but we know from experience that, so far as turning the nut is concerned, the wrench will be far less effective when in position No. 1. The explanation is found in the fact that the effective distance of the force from O is the distance h, measured at right angles to the line $I K$, along which the force is supposed to act, and that this distance is less than either l or f.

From this illustration we see that the moment of a force is numerically equal to the product of the magnitude of the force and the perpendicular distance from the axis, or pivot, to the line of action of the force. To find the moment of a force, therefore, (1) determine the location of the axis about which the body is supposed to turn; (2) draw an indefinite line representing the line of action of the force;

* MACHINERY, January, 1898.

(3) multiply the force by the perpendicular distance from the axis to the line.

This perpendicular distance, as *h*, *l*, or *f* in Fig. 13, is called the lever arm of the moment, and the axis or pivot the center of rotation. If the force is taken in pounds and the lever arm in inches, the result will be in inch-pounds, while if the foot were used as the unit of length, the result would be in foot-pounds. The term foot-pounds, however, has here a very different meaning from that which has been given to it before. In this case it is the unit of rotative effect, and

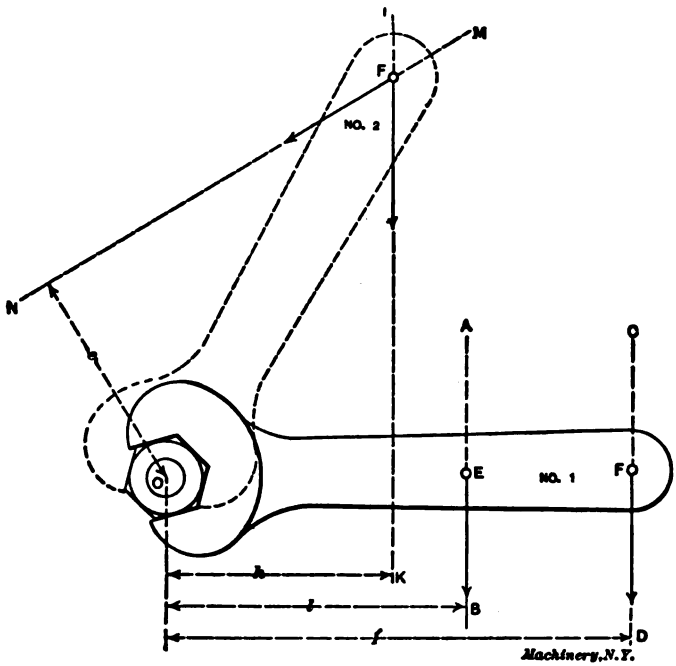

Fig. 13

in the other the unit of work, or the work done in raising one pound one foot high. The two should not be confused.

In Fig. 13, if the pull along *C D* should be 50 pounds and the distance *f*, 15 inches, the moment of the force would be $15 \times 50 = 750$ inch-pounds, or

$$\frac{15 \times 50}{12} = 62.5$$

foot-pounds. If the wrench in position No. 2 should be pulled in the direction of the arrow along the line *M N*, the moment would be the product of the force and the lever arm *e*. When a force tends to produce right-hand rotation, or rotation in the direction in which the hands of a watch move, its moment is said to be *positive*, and *negative* when the rotation tends in the opposite direction.

The Reaction on the Pivot

If a block of wood be set on end on a smooth sheet of ice, as in Fig. 14, and a horizontal force be steadily applied at its upper end, it will simply slide along the surface; but let the wooden block be placed upon a rougher surface, and the result will be that it will overturn or rotate about the point *O*, which acts as a pivot. In both cases the frictional resistance *F* on the lower end of the block is a force acting in a direction opposite to *P*. On the ice, the force *F* is smaller than the force *P*, but on the rougher surface it becomes exactly equal to it; for, if *F* should be smaller than *P*, instead of equal to it, the block would not overturn, but would move to the left as it did when resting upon the ice. Similarly, whenever rotary motion of any body occurs, there must be at least two equal and opposite forces, not in the same straight line. This principle is universal.

In Fig. 13, for example, the bolt must react with a force equal and opposite to that applied to the handle of the wrench. There is a

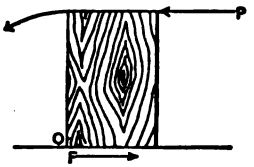

Fig. 14

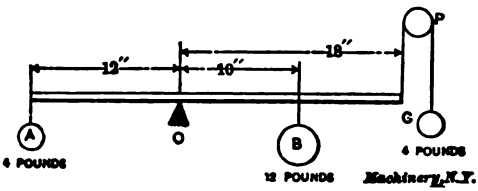

Fig. 15

reaction at the shaft and bearing of a gear wheel or pulley, which is equal and opposite to the force applied by the driving gear or belt.

The Principle of Moments

When two or more forces act upon a rigid body and tend to turn it about an axis, then, for equilibrium to exist, the sum of the moments of the forces which tend to turn the body in one direction must be equal to the sum of the moments of those which tend to turn it in the opposite direction about the same axis.

In Fig. 15, a lever 30 inches long is pivoted at the fulcrum *O*. At the right, and 10 inches from *O* is a weight, *B*, of 12 pounds, tending to turn the bar in a right-hand direction about its fulcrum *O*. At the left end, 12 inches from *O*, the weight *A* of 4 pounds tends to turn the bar in a left-hand direction, while weight *C*, at the other end, 18 inches from *O*, has a like effect, through the use of the string and pulley *P*. Taking moments about *O*, which is the center of rotation, we have:

Moment of $B = 10 \times 12 = 120$ inch-pounds.

Opposed to this are the moments of *A* and *C:*

Moment of $A = 4 \times 12 = 48$ inch-pounds.

Moment of $C = 4 \times 18 = 72$ inch-pounds.

Sum of negative moments $= 120$ inch-pounds.

Hence, the opposing moments are equal, and, if we suppose, for simplicity, that the lever is weightless, it will balance or be in equi-

librium. Should weight *A* be increased, the negative moments would be greater and the lever would turn to the left, while if *B* should be increased, or its distance from *O* be made greater, the lever would turn to the right. In the following treatment on the lever some additional examples will be taken up.

Another application of the principle of moments is given in Fig. 16. A beam of uniform cross-section, weighing 200 pounds, rests upon two supports, *R* and *R'*, which are 12 feet apart. The weight of the beam is considered to be concentrated at its center of gravity *G*, at a distance of 6 feet from each support. A weight of 50 pounds is placed upon the beam at a distance of 9 feet from the right-hand support, *R'*. Required, the portion of the total weight borne by each support.

Before proceeding, it should be explained that the two supports react or push upward, with a force equal to the downward pressure of the beam. To make this clear, suppose two men to take hold of the beam, one at each end, and that the supports be withdrawn. Then, in order to hold the beam in position, the two men must together lift or pull upward an amount equal to the weight of the beam and its load, or

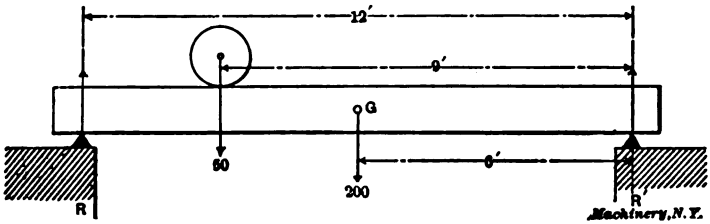

Fig. 16

250 pounds. Placing the supports in position again, and resting the beam upon them, does not change the conditions. The supports must react upwards just as the men had to pull up. The weight of the beam acts downward, and the supports react by an equal amount. This is an extension of the principle of the reaction of the pivot mentioned above.

Now, to solve the problem, assume the beam to be pivoted at one support, say at *R'*. The forces or weights of 50 pounds and 200 pounds tend to rotate the beam in a left-hand direction about this point, while the reaction of *R* in an upward direction tends to give it a right-hand rotation. As the beam is balanced and has no tendency to rotate, it is in equilibrium, and the opposing moments of these forces must balance. Hence, taking moments,

$$9 \times 50 = 450 \text{ foot-pounds.}$$
$$6 \times 200 = 1{,}200 \text{ foot-pounds.}$$

Sum of negative moments $= 1{,}650$ foot-pounds.

Letting *R* represent the reaction of support,

$$\text{Moment of } R = R \times 12 \text{ foot-pounds.}$$

By the principle of moments, $R \times 12 = 1{,}650$. That is, if *R*, the quantity which we wish to obtain, be multiplied by 12, the result will

be 1,650. Hence, to obtain R, divide 1,650 by 12, whence $R = 137.5$ pounds, which is also the weight of that end of the beam. As the total load is 250 pounds, the weight of the other end must be $250 - 137.5 = 112.5$ pounds.

CHAPTER V

THE MECHANICAL POWERS*

The Lever

Under the subject of moments, it was shown that, for a lever to be in equilibrium—that is, for it to balance—the sum of the moments tending to turn it in one direction about its fulcrum, must balance or equal the sum of those which tend to turn it in the opposite direction. This simple principle enables us to solve examples where it is desired to find the length of one of the lever arms, or one of the

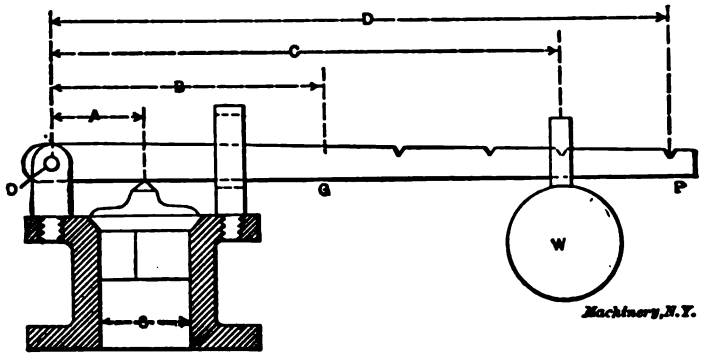

Fig. 17

forces or resistances acting upon the lever, the operations being somewhat similar to those used in finding the reaction of the supports of the beam shown in Fig. 16.

A very common, but at the same time a useful, illustration is found in the lever safety-valve. In Fig. 17, let S be the inside diameter of the valve seat; G, the center of gravity of the lever; and W the weight used to hold down the lever and keep the valve closed. The pivot or fulcrum O is the point about which moments are to be taken, and when the valve is just at the point of blowing off, the opposing moments which keep the lever in equilibrium are (1) the pressure against the valve multiplied by the distance A, tending to turn it in a left-hand direction, and (2) the weight W multiplied by C, plus the weight of the lever multiplied by B, tending to turn it in a right-hand direc-

* MACHINERY, March and April, 1896.

tion. The weight of the valve itself is comparatively small and may be neglected.

The Principle of Work

There is another principle of more importance than the principle of moments, even in the study of machine elements. It is called the principle of work, and to make it clear, we will analyze the process of the operation of a machine.

1. A force such as the pull of a driving belt, or the pressure of steam, is applied in a given direction at one or more points. The product of the force, and the distance through which it moves, measure the work that is put into the machine.

2. The applied force is transmitted to the point where the operation is to be performed. During the transmission the force is modified in direction and amount, partly by the arrangement of the mechanism and partly by the resisting force of friction, which it must overcome.

3. At the point where the operation is performed, the modified force overcomes a resistance in any required direction, such, for example, as the resistance of metal to a cutting tool. The product of the resistance, and the distance through which it is overcome, measure the work done by the machine.

The principle of work states that, neglecting frictional or other losses, the applied force, multiplied by the distance through which it moves, equals the resistance overcome, multiplied by the distance through which it is overcome. That is, a force acting through a given distance can be made to overcome a greater force acting as a resistance through a less distance; but no possible arrangement can be made to overcome a greater force through the same distance.

The principle of work may also be stated as follows:

Work put in = lost work + work done by machine.

This principle holds absolutely in every case. It applies equally to a simple lever, the most complex mechanism, or to a so-called "perpetual motion" machine. No machine can be made to perform work unless a somewhat greater amount—enough to make up for the losses—be applied by some external agent. As in the "perpetual motion" machine no such outside force is supposed to be applied, this problem is absolutely impossible, and against all the laws of mechanics.

The Wheel and Axle

This mechanism, Fig. 18, is simply an arrangement for continuing the action of the lever as long as required. So long as a sufficient pull is applied to the rope, which fits into the grooved wheel, to overcome the resistance of the load attached to the rope that passes over the drum, the weight will be raised.

(*a*) First we will apply the principle of moments. In Fig. 19, let the larger circle represent the circumference of a wheel of radius R, to the periphery of which a force P is applied. Let the smaller circle represent the circumference of the drum of radius r, to the periphery

of which is applied a resistance W. P and W correspond to the pull on the rope and the resistance of the weight indicated in Fig. 18.

The moment of the force P about the center O, which corresponds to the fulcrum of a lever, is P multiplied by the perpendicular distance R, it being a principle of geometry that a radius is perpendicular to a line drawn tangent to a circle, at the point of tangency. Also the opposing moment of W is $W \times r$. Hence, by the principle of moments,

$$P \times R = W \times r.$$

(*b*) Now, for comparison, we will apply the principle of work. Assuming this principle to be true, the pull P multiplied by the distance passed through by the rope should equal the resistance W multiplied by the distance that the load is raised. In one revolution the driving rope passes through a distance equal to the circumference of the wheel, which is equal to $2 \times 3.1416 \times R = 6.2832 \times R$, and the hoisting rope passes through a distance equal to $2 \times 3.1416 \times r$. Hence, by the principle of work,

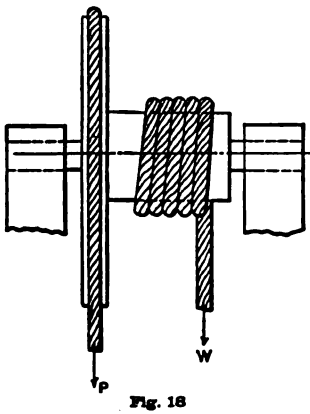

Fig. 18

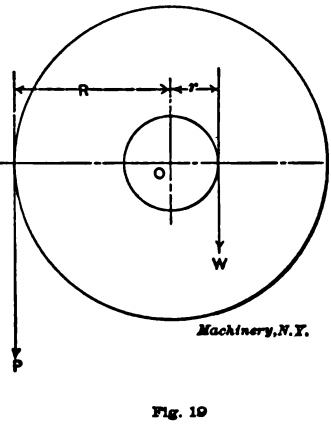

Fig. 19

$$6.2832 \times P \times R = 6.2832 \times W \times r.$$

This statement simply shows that $P \times R$ multiplied by 6.2832 equals $W \times r$ multiplied by the same number, and it is evident therefore, that the equality will not be altered by canceling the 6.2832 and writing

$$P \times R = W \times r.$$

But this is the same statement that was obtained above by applying the principle of moments. Hence, we see that the principle of moments and the principle of work harmonize.

It is to be observed that in the wheel and axle mechanism the drum may be of any size and that the wheel may be replaced by a crank, since the path described by the crank handle or crank pin is the circumference of a circle of a radius equal to the length of the crank.

Wheel-work

A series of two or more axles geared together by toothed wheels, or by pulleys connected by belts, is called a *train*. A wheel which im-

parts motion is called a *driver*, and one which receives the motion a *driven* wheel. It can easily be shown that the basis of operation of a train of wheels is a continuation of the principle of the wheel and axle. In the latter the wheel is in reality a driven wheel and the axle or drum a driver, and hence we have that the product of the applied force and the radius of the driven equals the product of the resistance and the radius of the driver. To extend the rule to the wheel train, we have that the continued product of the applied force and the radii of the driven wheels equals the continued product of the resistance and the radii of the drivers. In calculations, the diameters, or the number of teeth in the wheels may be used instead of the radii, as stated above.

The Pulley

The pulley, as a machine element, consists, in its simplest form, of a grooved wheel or sheave turning within a frame, called a block, by

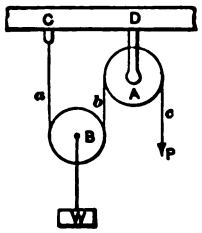

Fig. 20

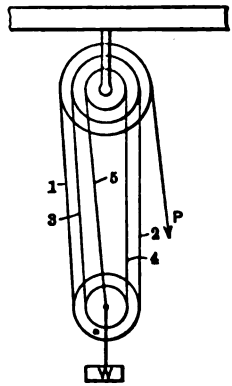

Fig. 21

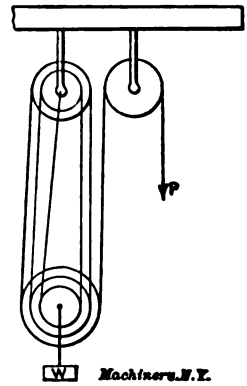

Fig. 22

means of a cord or rope which passes over it. Combinations of these blocks are used in order to gain a mechanical advantage in raising weights.

In Fig. 20 is a fixed and movable pulley. The fixed pulley *A*, and also one end of the rope, is attached to the beam overhead, while pulley *B* may be raised or lowered through the action of the rope. The distance through which *B* and hence the weight *W* move is equal to one-half the movement of the free end of the rope. The applied force *P*, therefore, acts through twice the distance passed through by the weight, and will raise an object whose weight is equal to 2 *P*, neglecting, of course, all frictional losses. As the rope passes freely over the pulleys, the stress is the same at every point and is equal to the pull *P*. Assuming *P* to be 100 pounds, the pull exerted in either direction by the rope at sections *a*, *b* and *c* would therefore be 100 pounds, and hence the forces supporting *W* would be $100 + 100 = 200$ pounds, the pull upon eye-bolt *C* would be 100 pounds, and the forces acting at *D*, $100 + 100 = 200$ pounds.

In Fig. 21 is represented a combination of a double and a triple block. The pulleys of each turn freely upon the same pin as an axis, and for convenience in illustration are drawn with different diameters, this method serving well to show the principles of operation. In Fig. 22 are the same blocks, but with their positions reversed, the triple block being the movable one and the double block being fixed, while the end of the rope is here made fast to the upper or fixed block instead of to the movable one, as in Fig. 21. In either case, by the principle of work, the applied force P, times the distance through which it moves, must equal the weight W, times the height that it is raised. Suppose W and the movable block to be raised bodily one foot without pulling at P. In Fig. 21 there would be one foot of slack in each of the parts of the rope numbered from 1 to 5, or five feet in all, and to take up this the free end of the rope would have to be pulled down five feet, which is five times the distance moved through by the weight W. Hence, in lifting the weight a given distance, the force P moves through five times this distance; and applying the principle of work, $P \times 5 = W \times 1$, or an applied force of one pound will be sufficient to lift a weight of five pounds. By similar reasoning it will appear that, as arranged in Fig. 22, an applied force of one pound will lift a weight of six pounds, there being six parts of the rope in which slack can be taken up instead of five, as before. Whatever the arrangement or number of the pulleys, the weight that can be raised can be calculated by observing the relative distances passed through by the two forces P and W. It should be noticed, however, that the resistance that can be overcome is always equal to the applied force multiplied by the number of the parts of the rope that engage with the movable block, which is a convenient rule to use. Thus, if there were seven parts springing from the movable block, a force of 100 pounds would overcome a resistance of $100 \times 7 = 700$ pounds, neglecting frictional losses.

This rule may also be arrived at by considering that the force P produces a uniform stress equal to P throughout the whole length of the rope, as was mentioned in connection with Fig. 20. In Fig. 21, for example, the tension in each of the numbered parts is equal to P, and the total upward force supporting the weight is equal to $5 \times P$.

In the foregoing it is assumed that the supporting ropes all hang vertically. In practice, they usually do, very nearly. In case they should not, however, the problem is more complicated. We shall deal with this problem later.

The Screw

By this time the universal character of the principle of work must be apparent, even to one who but imperfectly understood its importance before. The law that work received equals work delivered, is everywhere true, if we disregard the losses of transmission. In the case of the screw, the initial force moves through the circumference of a circle, the point of application usually being at the end of a crank or bar, at the surface of a pulley, or applied in some similar manner. A screw may be defined as a cylinder around which threads are wound in

successive coils or helices, equally spaced. The lead of a single-threaded screw is the distance between like points on successive threads measured on a line parallel to the axis of the screw. The amount that a screw advances in one turn is equal to the lead, and in fractional turns it is equal to the same fraction of the lead. Thus, if a screw is given one-fourth turn it advances one-fourth of the lead, and the ratio is the same as though the screw were supposed to make one complete turn and to advance a distance equal to the full lead. Hence, we have for the screw that the applied force multiplied by the circumference of the circle described by the force equals the resistance multiplied by the lead.

Machine Efficiency

Thus far in problems of work we have neglected entirely the effect of frictional losses, which in many cases require a greater expenditure of power than that necessary for the operations actually performed by the machine.

The efficiency of a machine is the ratio of the work got out of a machine to the work put in, and is obtained by dividing the former quantity by the latter. If 1,000 foot-pounds of work were done by a machine in a given time, and 1,000 foot-pounds of work were put in in the same time, then the efficiency would be equal to $1{,}000/1{,}000 = 1$, or 100 per cent; but if only 250 foot-pounds were done by the machine, the rest being absorbed by friction, the efficiency would be $250/1{,}000 = 0.25$, or 25 per cent. The efficiency of a machine can never be greater than 1.

CHAPTER VI

GRAPHICAL REPRESENTATION OF FORCES*

A force possesses three prominent characteristics which, when known, determine it. They are: its direction, place of application, and magnitude. The direction of a force is the direction in which it tends to move the body upon which it acts. If not influenced by any other forces, this will always be along a straight line. The place of application of a force is generally, though not always, taken at a point, as at the center of gravity. The magnitude of a force is measured in pounds.

Previously we have represented forces which have been supposed to act at a given point, or in certain directions, by means of straight lines and arrowheads, this being a natural and convenient way to do. It can be shown, moreover, that this method serves to represent very accurately the three characteristics mentioned above. The straight line indicates the line of action of the force, the arrowhead the direction

* MACHINERY, April, 1896.

in which the force is supposed to act along the line, and the length of the line and magnitude of the force, a suitable scale being adopted. Thus, if a scale of 1/16 of an inch to ten pounds were used, a line 2½ inches long would represent a force of 400 pounds. The point of application may occur at any point on the line, but it is generally convenient to assume it to be at one end.

To illustrate, in Fig. 23, a force is supposed to act along the line

Fig. 23

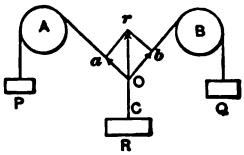

Fig. 24

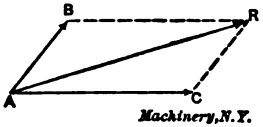

Fig. 25

$A\,B$ in a direction from left to right. The length $A\,B$ may be made to show the magnitude of the force. If A is the point of application, the force is exerted as a pull, and if B should be assumed to be the point at which it acts, it would indicate that the force was exerted as a push. The single force which will produce the same effect upon a body as two or more forces acting together upon it is called their *resultant*. The separate forces themselves, which can be so combined, are called the *components*. The process of finding the resultant of two or more forces is called the composition of forces, and of finding two or more components of a given force, the resolution of forces.

Parallelogram of Forces

In Fig. 24, let A and B be two pulleys which are pivoted to a board, and around which a cord is passed, having weights P and Q at the ends. Near the center of the cord a third weight, R, is suspended as shown. We will assume that the three weights are so proportioned that they will come to rest in the positions shown, and thus the point O will be acted upon by three forces in equilibrium, whose lines of action lie in the directions taken by the three parts of the cord. It is

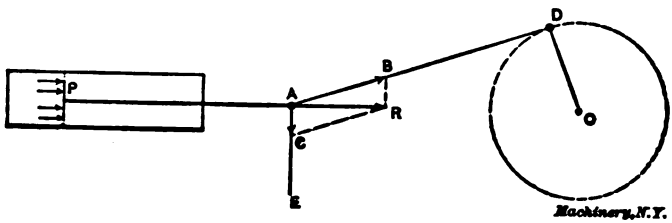

Fig. 26

obvious, moreover, and this point should be carefully noted, that under these conditions the force acting along $O\,C$ must be exactly equal and opposite to the resultant of the forces acting along $O\,A$ and $O\,B$. Now measure along $O\,B$ and the part $O\,b$ containing as many inches as there are pounds in the weight Q, and along $O\,A$ the part $O\,a$ containing as many inches as there are pounds in the weight P. With a

pencil, draw the lines $O\,a$ and $O\,b$ upon the supporting board and complete the parallelogram $O\,a\,r\,b$. Then $O\,a$ and $O\,b$ will represent the magnitude and direction of the forces acting along $O\,A$ and $O\,B$, and upon examination it will be found that if the diagonal $O\,r$ be drawn, it will extend in the same line as the cord $O\,C$ and will contain as many inches as there are pounds in R. Therefore, $O\,r$, being opposite to $O\,C$, represents in magnitude and direction the resultant of forces $O\,a$ and $O\,b$.

The foregoing is an experimental proof of the principle of the parallelogram of forces, which is as follows:

If two forces applied at a point are represented in magnitude and direction by the adjacent sides of a parallelogram ($A\,B$ and $A\,C$ in Fig. 25), their resultant will be represented in magnitude and direction by the diagonal ($A\,R$) lying between those sides.

As an illustration of the use of the parallelogram of forces, let it be required to find the force acting through the connecting-rod of a steam engine due to the steam pressure upon the piston. In Fig. 26 the steam pressure is transmitted through the piston-rod $P\,A$, and at the cross-head A is resolved into two components, one along the connecting-rod and the other at right angles to the piston-rod. This is due to the angle made by the connecting-rod which creates a pressure upon the guides. Since the decomposition of the force occurs at A, from this point draw the line $A\,R$, representing in magnitude and direction the force of the steam pressure against the piston. Draw an indefinite line $A\,E$ at right angles to the piston-rod, and from R draw $R\,B$ and $R\,C$ parallel to $A\,E$ and $A\,D$, respectively. Then the points of intersection, B and C, will determine the lengths of the component $A\,B$ acting along the connecting-rod, and of the component $A\,C$ perpendicular to the guides.

CHAPTER VII

MOTION AND MASS*

Motion is a progressive change of position. We can judge of the motion of a body only by comparison with the position of some other body, which latter does not have the same motion. Motion, then, is a relative term. A railroad train running at 10 miles an hour has this speed in relation to the earth, but in relation to another train moving at the same rate on a parallel track, and in the opposite direction, its motion is at the rate of 20 miles an hour. A brakeman running from the forward to the rear end of a freight train at the rate of 5 miles an hour, might be moving with either a greater or less velocity than this when compared with the ground, depending upon

* MACHINERY, May, 1896.

the motion of the train; and if it should happen that the train was moving forward at the rate of 5 miles an hour, the man would appear stationary to an observer standing beside the track.

To put a body into motion, or to alter its motion, requires the expenditure of force, as is a matter of common observance, and a little consideration will show that the tendency of force is always to produce motion, or to modify it. In case the body acted upon is perfectly free to move, however, as is nearly the condition, for example, of a heavy ball suspended from the ceiling by a long wire, the effect will always be to actually produce motion however slight the force. In that branch of mechanics called dynamics, which treats of the motion of bodies, we generally have to deal only with cases of this kind. Should it be necessary, however, to take frictional resistances into account, we deduct that part of the applied force which is used in overcoming friction, and assume that the remainder of the force acts as though such resistance did not exist.

Velocity is the rate of motion. When speaking above of the train moving 10 miles an hour, or of the brakeman running 5 miles an hour, the velocity of the train or brakeman was meant. Uniform velocity takes place when equal spaces are passed over in equal times, and variable velocity when the spaces are unequal. In physical problems, velocity is generally expressed in feet per second, and in engineering work in feet per minute. Other units are also used, as when we speak of the velocity of a railroad train as being a certain number of miles per hour.

The velocity of a body is equal to the distance passed through, *uniformly* divided by the time. In problems in dynamics it is customary to speak of distance as space, and in conformity with this we will represent it by the letter S.

Let S = the space, or distance; V = the velocity; and t = the time. Then

$$V = \frac{S}{t}. \qquad (7)$$

Formula (7) may be re-written so as to find the values of S and t, thus:

$$S = Vt \text{ and } t = \frac{S}{V}.$$

Acceleration is the rate at which velocity changes when it is variable, that is, acceleration is the change in the velocity of a body during a very short interval of time, as a second. Thus, suppose a body to have a velocity one second of 100 feet per second, and the next second of 110 feet per second. The acceleration is then 10 feet per second *in a second*. If it should require two seconds for this increase of velocity to occur, the acceleration would be $10 \div 2 = 5$ feet per second in a second, and if it should occur during an interval of one-fourth of a second, it would be $10 \div \frac{1}{4} = 40$ feet per second in a second. When motion is decreasing instead of increasing, it is called *retarded* motion.

An important application of accelerated motion is found in the case of bodies falling under the influence of gravity; this will be taken up later. A body falling freely from rest to the earth acquires during the first second a velocity of about 32 feet per second; at the end of the second second a velocity of about $32 + 32 = 64$ feet per second; at the end of the third second a velocity of $64 + 32 = 96$ feet per second, and so on. It is thus a case of uniformly accelerated motion. This acceleration, due to the gravity of 32 feet per second in a second (32.2, more exactly, for the vicinity of London, and 32.16 for the vicinity of New York) enters so much into calculations that it is customary to always represent it by the same letter—the letter g.

Mass

The mass of a body is the quantity of matter that it contains. We are accustomed to think of the weight of a body as a measure of its mass. When one speaks of a ton of coal, the word ton conveys at once an idea of the quantity of coal that is referred to. We know, however, that weight varies with the locality, decreasing as we go above the sea level, and increasing in passing either north or south from the equator. This fact was briefly explained in the first part of this treatise. The variation is slight, and in any case could not be detected with the ordinary balance scales, but it nevertheless exists. If a load of coal should weigh 2,000 pounds at the sea level on a pair of platform scales, and should then be drawn to the top of a mountain a mile high and similarly weighed, the scales would again balance at 2,000 pounds, because any variation in the attraction of gravity between the two places would affect the counterpoise of the scales in the same ratio that it affected the body weighed. But if the coal were weighed in a large spring balance, it would be found to weigh only about 1,999 pounds on the mountain top; yet it is perfectly plain that the quantity of matter in the coal would not be altered in any way by the journey. We thus see how easy it is, and also how erroneous, to form the idea that weight is a correct measure for quantity of matter or mass.

To obtain a numerical expression for mass, divide the weight of a body as determined by a spring balance g, by the acceleration due to gravity at that point; or for practical purposes, the weight as determined by a pair of good scales, by 32.16. Expressed as a formula:

$$mass = \frac{weight}{g} \qquad (8)$$

This expression fulfills the condition required; namely, it gives a constant value, wherever the locality. Weight varies directly as the force of gravity, and so does the value of g. Hence, if the weight and g are both determined at the same place, their ratio will be constant for all places. Thus the mass of a 100-pound weight $\frac{100}{32.16} = 3.11$ pounds. On the surface of the sun, where the force of gravity is 28

times as great as here, the same object would weigh 2,800 pounds, but its mass would be $\frac{28 \times 100}{28 \times 32.16} = 3.11$ pounds, as before. It will be observed that both mass and weight are taken in pounds. This double use of the word pound is customary, though somewhat ambiguous. Mass is an important factor in the study of motion.

Newton's Laws of Motion

The first clear statement of the fundamental relations existing between force and motion was made in the 17th century by Sir Isaac Newton, the English mathematician and physicist. It was put in the form of three laws, which are given as originally stated by Newton:

I. Every body continues in its state of rest, or uniform motion in a straight line, except in so far as it may be compelled by force to change that state.

II. Change of motion is proportional to the force applied and takes place in the direction in which that force acts.

III. To every action there is always an equal reaction; or, the mutual action of two bodies are always equal and oppositely directed.

Law I. The first law is known as the law of inertia, and it is, in fact, a statement of the principle of inertia. Inertia is a general property of matter, that is, a peculiar quality possessed by all bodies, just as elasticity, hardness, ductility, brittleness, etc., are properties common to different substances. By virtue of this property, called inertia, all bodies are compelled to remain at rest, when placed at rest, or in motion when placed in motion, until acted upon by some force. The term inertia means simply the inability of matter to change its state with regard to motion or rest.

The fact, as stated in the first law of motion, that any object at rest cannot of itself acquire motion, is a matter of every-day observation. Whenever a body passes from a state of rest to one of motion, a cause can always be assigned for the change, such as a blow or a push or pull. The truth of this statement on the second part of the law, however, is not so easily grasped. It is asserted that a body once in motion will continue in motion, following the path of a straight line, unless acted upon from without, and it is implied that it is as natural for a body to continue indefinitely in motion as it is for it to remain at rest. Looking about, however, it will be seen that whenever the motion of a body is altered, or changes from a rectilinear path, it is because of outside interference. A ball, for example, when thrown from the hand, moves in a curved path and finally comes to rest because of the attraction of gravity and the resistance of the air. If the ball be rolled along the rough ground, its loss of motion is accounted for by the friction, for we observe that the smoother the ground, the further the ball will roll. Again, if we can conceive it possible that the ball could be hurled out into space away from these resistances, it is reasonable to suppose that it would go on forever.

The effect of inertia is also exhibited whenever we attempt to put

a body suddenly into motion or to stop one already in motion. The quick start of a railway train throws everybody against the back of his seat, as we say, and in a similar manner the passengers are thrown forward when the brakes are quickly applied.

Law II. The term "motion" as here used by Newton embraces all the elements that go to make up the motion of a body, and hence introduces both mass and velocity, or what is called *momentum*. The momentum of a body is measured by the product of the mass M of the body by the velocity V, or

$$\text{momentum} = M\,V = \frac{W}{g}\,V. \qquad (9)$$

It is sometimes defined as the quantity of motion in a body. It is not a force, but rather the measure of the effect of a force in a given time, since to produce velocity in a mass requires time.

The second part of this law states that the motion takes place in the direction in which the force acts. From this follows the principle of the *independence of motions*, that when two or more forces act upon a body at the same time, each produces exactly the same effect as though it acted alone, whether the body be originally at rest or in motion. Thus, if a person throws a ball due north from the roof of a house, while the wind is blowing from the west, the effect of the throw in the northerly direction will be exactly the same as it would if the air were quiet, while the distance that the ball is carried to the east will be equal to the distance that it would travel in the same time if it were under the influence of the wind alone, disregarding, of course, any unequal frictional resistances of the air. Moreover, as the ball leaves the hand, it will gradually drop to the earth under the influence of gravity, and it will take precisely as long for it to reach the ground as it would if it had been simply dropped from the edge of the roof. That is to say, the effect of the force of gravity is exactly the same as though it acted alone; each motion goes on independently, although the position of the ball at any time depends upon the action of all the forces acting.

Law III. We have seen, under the subject of moments, how the supports of a beam react with a force equal to the downward pressure of the beam. There are many other evident illustrations of this law. A ton weight hanging on a crane hook exerts a downward pull of 2,000 pounds, and the reaction of the hook and chain is also 2,000 pounds. When a horse pulls a cart there is the reaction of the load. In jumping from a boat the reaction shoves the boat away from the shore. A man cannot "lift himself by his boot straps," because the downward push, or reaction, is equal to the upward pull.

CHAPTER VIII

FALLING BODIES*

Under the influence of gravity alone, all bodies fall to the earth with the same velocity. The fact that heavy bodies actually fall more rapidly than those of less weight or density, as would be observed in the dropping of a stone and a leaf, is due solely to the greater retarding effect of the air upon the latter. Weight does not affect the time of fall. Weight is the measure of the attractive force of gravity, and if one body weighs twice as much as another, the attraction of gravity upon it is two times as great as upon the lighter body; but as this force must accelerate twice as great a mass in the former body as in the latter, the velocity of each must be alike. An apparatus used to prove this consists of a long glass tube with closed ends, arranged so that the air can be exhausted. When this has been done, it is found that objects of varying sizes and weights will fall from one end of the tube to the other with equal rapidity.

It has been stated before that in the vicinity of New York the acceleration due to gravity is 32.16 feet per second in a second. That is, the constant increase of velocity given by gravity during each second is 32.16 feet per second. For convenience we will call it 32 feet per second. Supposing a body to be dropped from such a height, therefore, that it falls during an interval of five seconds, its velocity at the end of each succeeeding second will be as follows:

	Feet per second.
Velocity at end of 1st second =	32
Velocity at end of 2nd second = 32 + 32 =	64
Velocity at end of 3rd second = 64 + 32 =	96
Velocity at end of 4th second = 96 + 32 =	128
Velocity at end of 5th second = 128 + 32 =	160

It will be seen that the results 32, 64, 96, etc., may be obtained by multiplying the number of seconds by 32, the value of gravity. Hence, for finding the velocity at the end of any second, we have

$$v = g\,t. \qquad (10)$$

In this and succeeding formulas for falling bodies we will let

v = velocity in feet per second.
t = time in seconds.
g = acceleration due to gravity.
h = height in feet.

During the first second of fall the velocity at the start is 0 and at the close 32 feet per second. The *mean* velocity is 16 feet per second. Hence, the space traversed during this second is $16 \times 1 = 16$ feet. A body, therefore, falls 16 feet during the first second of motion.

In like manner, the space passed through during the second second

* MACHINERY, June, 1896.

is equal to the mean velocity during that second, multiplied by the time. The mean velocity is equal to the sum of the velocities at the beginning and end, divided by the two. Hence, by the aid of the table above, we may make out another table showing the distance passed through in each second. Since the time is one second, or unity, the multiplication by this factor may be omitted.

	Feet.
During 1st second, space =	16
During 2nd second, space $= \frac{32+64}{2} =$	48
During 3rd second, space $= \frac{64+96}{2} =$	80
During 4th second, space $= \frac{96+128}{2} =$	112
During 5th second, space $= \frac{128+160}{2} =$	144

It will be observed that $48 = 3 \times 16$, or three times the space passed through in the first second. Also, $80 = 5 \times 16$; $112 = 7 \times 16$; and $144 = 9 \times 16$. From this we conclude that the spaces traversed during each succeeding second are proportional to the odd numbers 1, 3, 5, 7, 9, 11, etc., which is a useful fact to remember.

We have seen that a body falls 16 feet the first second, 48 feet the second, 80 feet the third, and so on. In two seconds, therefore, it falls $16 + 48 = 64$ feet; in three seconds, $16 + 48 + 80 = 144$ feet, and so on. But $64 = 16 \times 4$, or 16×2^2, and $144 = 16 \times 9$, or 16×3^2, the 2 and 3 in each case being the number of seconds required for a body to fall 64 to 144 feet, respectively. And, in general, the space that a body will fall in a given time is equal to 16 multiplied by the square of the number of seconds. Hence,

At the end of 2nd space $= 16 + 48 = 64 = 16 \times 2^2$.
At the end of 3rd space $= 16 + 48 + 80 = 144 = 16 \times 3^2$.
At the end of 4th space $= 16 + 48 + 80 + 112 = 256 = 16 \times 4^2$.
At the end of 5th space $= 16 + 48 + 80 + 112 + 144 = 400 = 16 \times 5^2$.

The factor 16 that has been used is one-half of 32, the acceleration due to gravity, or $\frac{1}{2}\ g$. Hence, to find the total space for any time, multiply the square of that time in seconds by $\frac{1}{2}\ g$. Therefore,

$$h = \tfrac{1}{2}\ g\ t^2. \tag{11}$$

Formulas 10 and 11 are the fundamental formulas for falling bodies. By combining them algebraically, we may obtain as an expression for velocity:

$$v = \sqrt{2\,g\,h} \tag{12}$$

From 10 and 12 may also be derived

$$t = \frac{v}{g} = \frac{\sqrt{2\,g\,h}}{g} = \sqrt{\frac{2\,h}{g}} \tag{13}$$

These formulas apply to retarded motion which takes place when a body is thrown into the air, as well as to the accelerated motion produced by the action of gravity upon a falling body. Thus, when a body is thrown upward it is gradually retarded by the same amount that it is accelerated upon its return, and when it reaches the earth again, it has the same velocity that it had when it left the hand.

CHAPTER IX

THE PENDULUM*

In its simplest practical form, the pendulum consists of a ball of lead or other heavy material suspended by a fine cord or wire. For convenience, this may be called a *simple pendulum*, and any pendulum in which the weight is not so concentrated, is a *compound pendulum*. Strictly, however, a true simple pendulum is merely an ideal conception—it is a particle of matter suspended by a weightless cord, and capable of vibrating without friction, while any pendulum that can be actually constructed is a compound pendulum.

The length of a pendulum is the distance from the point of suspension to a point lying below the center of gravity, called the center of oscillation. One vibration of a pendulum consists of one complete beat one way. When it swings back and forth once, two vibrations take place.

Law I. When the arc swung through is small, the vibrations occur in equal times irrespective of the distance passed through. Moreover, the arc may vary widely in length without materially affecting the time of vibration. Thus, a pendulum of such a length that it will vibrate once in one second, when its arc of action is 5 degrees, would require only 1/200 of a second longer to vibrate through an arc of 30 degrees.

Law II. The times of vibration of different pendulums are proportional to the square root of their lengths. Thus, the times of vibrations of pendulums 1, 9 and 25 inches long would be proportional to the numbers 1, 3 and 5. It would take the second pendulum three times as long to vibrate as the first, and the third five times as long. A pendulum which vibrates once in four seconds must be four times as long as one which vibrates in two seconds, because the times of vibrations are as 2 : 1, and these must be proportional to the square roots of the lengths, or as $\sqrt{4} : \sqrt{1}$.

Law III. Time of vibration varies with the attraction of gravity, but is independent of the mass. This has been proved by swinging pendulums of different lengths in various localities and pendulums of the same length, but of different materials, at the same place.

* MACHINERY, June, 1896.

Center of Oscillation

The center of oscillation of a pendulum is that point which vibrates in the same time that it would if disconnected from all remaining particles. From Law II it is clear that the upper part of a pendulum tends to vibrate faster than the lower part, and so hasten its motion, while the lower part tends to vibrate slower and thus retard the motion of the whole. Between these two limits is the center of oscillation, which has the average velocity of all the particles of the pendulum, and which is neither quickened nor retarded by them. It vibrates in the same time that it would if it were a particle swinging by a weightless cord, as in the simple pendulum.

It may make it clearer to state that the center of oscillation and center of percussion of a body are at the same point. Hold an iron bar in the hand and strike an anvil a sharp blow with the end of the bar; it will sting the hand. Strike the anvil again with that part of the bar which is near the hand, and the effect of the blow will again be felt. Now, at some point between these two a blow may be delivered and no jerk or sting will be experienced. That point is the center of percussion, which, as just mentioned, is the same as the center of oscillation. In the case of a bar of uniform cross-section, and suspended at one end, the center of oscillation lies at a distance of two-thirds of the length of the rod from the point of suspension.

The Compound Pendulum

In order to apply the three laws to a compound pendulum, it is necessary to determine its length, which, according to the definition previously given, is the distance from its point of suspension to its center of oscillation. This done, it may be considered as a simple pendulum having the same length, for any simple pendulum of a given length will vibrate in the same time that a compound pendulum of the same length will vibrate.

It is important, therefore, to be able to locate the center of oscillation. This may be done by trial. The point of suspension and center of oscillation of a pendulum are mutually controvertible. If, therefore, a pendulum be inverted and another point of suspension found about which it will vibrate in the same time as before, this point will be the position of the first center of oscillation, and its distance from the first point of suspension can be measured.

Time of Vibration

The time of vibration of a pendulum is found by the formula

$$t = 3.1416 \sqrt{\frac{l}{g}} \qquad (14)$$

where t = time in seconds.

l = length in feet.

g = acceleration due to gravity.

In the vicinity of New York, for $t = 1$, $l = 39.1$ inches, or the length of the seconds pendulum is 39.1 inches.

CHAPTER X

ENERGY*

An agent is said to possess *energy* when it has the capacity of doing work—that is, of overcoming a resistance through a distance. In general, energy is something that is given to a body by doing work upon it, as when a weight is raised or is given a rapid motion, or when a spring is compressed; the energy, in turn, is given out when the body itself performs work. Energy is therefore sometimes defined as stored work. It is expressed in foot-pounds, the same unit that is used to express work.

Energy is either *potential* or *kinetic*.

(*a*) Potential energy is the power of doing work possessed by a body in virtue of its position or condition. If a body be so situated that it is acted upon by a force which will produce motion in it upon the removal of some restraining force, it is said to have potential energy. Thus, a ball suspended by a string has the power of doing work, because when the cord is cut, the ball will fall and will be capable of overcoming a resistance through a distance, the amount of the work depending upon the weight of the ball and the extent of the fall. A compressed spring and a head of water also have the capacity of doing work and are stored with potential energy.

The potential energy in any case is equal to the product of the force tending to produce motion, and the distance through which the body is able to move. If the suspended ball should weigh 10 pounds and hang 25 feet from the ground, it would possess 250 foot-pounds of energy. The force acting is here equal to the weight, or 10 pounds, and to raise the ball to its suspended position would require an expenditure of $10 \times 25 = 250$ foot-pounds of work, and when it falls it can give out just this amount of energy, which has been stored within it.

(*b*) Kinetic energy is the power of doing work possessed by a body in virtue of its motion. A moving railroad train, a fly-wheel, a current of air driving a wind-mill, a falling body, all possess kinetic energy. The kinetic energy of a body is obtained by multiplying one-half its mass by the square of its velocity in feet per second. Or,

$$E = \tfrac{1}{2} M v^2 \qquad (15)$$

where E = energy in foot-pounds, M = mass, and v = velocity in feet per second. The value of mass, we have already seen, is obtained by dividing the weight of a body by 32.16, the acceleration due to gravity, or

$$M = \frac{W}{32.16}.$$

* MACHINERY, July, 1896.

Hence we may write $\frac{W}{32.16}$ in formula (15), giving

$$E = \tfrac{1}{2} \times \frac{Wv^2}{32.16} = \frac{Wv^2}{64.32} = \frac{Wv^2}{2g}. \qquad (16)$$

It will be shown, shortly, how this formula is obtained.

Conservation of Energy

Energy exists in various forms, such as mechanical, molecular, and chemical. It is stored in all kinds of fuel, and is made apparent by chemical reactions, by muscular effort, and by many other means. There is the potential energy of the electrical charge and the kinetic energy of the electrical current. Heat is a form of energy. In the present instance, we are concerned with these different kinds, other than mechanical, only in that the universal and important law of the conservation of energy embraces them all. This law states, first, that energy may be transformed directly or indirectly from any one form into any other form; and second, that, however energy may be transformed or dissipated, the total amount of energy must forever remain the same. Energy can neither be created nor destroyed. It simply exists, and the various processes by which it is utilized are simply means for transforming it from one form into another. The steam engine changes heat energy into mechanical energy, and the percussion of a bullet against a rock converts mechanical into heat energy and melts the bullet. A body just at the point of falling from an elevation has a store of potential energy. As it falls it loses potential energy, but its velocity increases and its potential energy is gradually changed into kinetic energy. This will be illustrated by an example.

Suppose a body weighing 100 pounds, a cannon ball, for example, to be so situated that it has no store of potential energy, and that it is shot vertically upwards with a velocity of 1,500 feet per second. From formula (16) we find its kinetic energy at the start to be

$$E = \frac{100 \times (1{,}500)^2}{64.32} = 3{,}498{,}100 \text{ foot-pounds.}$$

This results from the potential, chemical energy of the gunpowder, part of which has gone to produce heat and sound. As the ball rises, it does work against gravity, and also overcomes the frictional resistance of the air, the latter generating heat. When the ball is two miles high, its potential energy is equal to $100 \times 2 \times 5{,}280 = 1{,}056{,}000$ foot-pounds, and neglecting the frictional loss, its remaining kinetic energy is $3{,}498{,}100 - 1{,}056{,}000 = 2{,}442{,}100$ foot-pounds. At the highest point reached the kinetic energy is entirely spent and the ball has its greatest store of potential energy. Could this be gathered together with the energy required for producing the heat and sound, it would exactly equal the amount of energy originally produced by the powder. As the ball drops to the earth again, its potential is changed back to kinetic energy, and when it reaches the ground it has the same velocity,

and hence the same amount of kinetic energy as when it left the gun, excepting the loss through friction.

We are now in a position to understand the derivation of formulas 15 and 16.

The potential energy of a body of weight W and at a height h is equal to $W h$, or

$$E = W h \qquad (17)$$

But, from the law of the conservation of energy, the kinetic energy of the body in falling from the height h has the same value. Hence, formula (16) may be used for kinetic energy, provided an expression for velocity can be introduced into it. For formula (12) may be obtained the expression

$$h = \frac{v^2}{2g}$$

and writing this for h in (17), we get

$$E = W \times \frac{v^2}{2g} = \frac{Wv^2}{2g}.$$

which is the same as before.

In examples involving the transformation of energy and its conversion into work, it should be remembered that work is done only when a resistance is overcome. A freely falling body is stored with energy, but it does no work until it meets with a resistance. The law of the energy stored in bodies is one of the most important ones in applied mechanics, particularly in hydraulics.

Rotating Bodies

When a body revolves about an axis, the particles at different distances from the center have different velocities, and hence different amounts of kinetic energy. For any such body, however, there is a mean radius of rotation, which is of such a length that if the whole mass of the body could be concentrated at the circumference of a circle having this radius, and rotated at the same speed as before, the same amount of kinetic energy would be developed. This mean radius is called the *radius of gyration*. For a solid, cylindrical body, like a disk or an emery-wheel, the radius of gyration is equal to the radius of the disk divided by $\sqrt{2}$. For a fly-wheel rim, it is sufficiently accurate to assume it to be the distance from the center to a point halfway between the outer and inner edges of the rim.

The object of the fly-wheel is to store up energy when the machine to which it is attached accelerates, or speeds up, and to give out energy when the motion is retarded. This acceleration or retardation may be due either to a fluctuation of the load or to a change in the applied energy.

Force of a Blow

It will be remembered that the principle of work, as applied to machines, teaches that, neglecting frictional or other losses, the work put into a machine equals the work done by the machine. This is

merely a special case of the principle of the conservation of energy, and it can be used to find the force of the blow delivered by a hammer or a falling body. The work put in by the energy and weight of a hammer at the instant of striking equals the work done in compressing or penetrating the material operated upon, and is equal to the resistance offered by the material, multiplied by the amount of this penetration.

It is clear that the resistance offered to the blow at any instant is equal to the force of the blow at that instant, and hence the work done equals the force of the blow multiplied by the amount of the penetration. It appears from this, moreover, that the force of a blow varies with the degree of penetration. Thus, suppose the energy of the first blow of a pile driver to be 10,000 foot-pounds, the weight of the pile driver 200 pounds, and that the pile sinks into the ground a distance of two feet. Before the ram is brought to rest it will have performed $10{,}000 + 200 \times 2 = 10{,}400$ foot-pounds of work, and hence the average force acting is 5,200 pounds for 5,200 (the force acting) times 2 (the distance through which it acts) equals 10,400 (the foot-pounds of work delivered). At the second stroke, suppose the ram again delivers 10,000 foot-pounds of energy, but that the pile sinks only one foot, then the work done will be $10{,}000 + 200 \times 1 = 10{,}200$ foot-pounds, and the average force acting will be 10,200 pounds.

When the force of a blow is calculated, the weight of the falling body should always be added to the energy due to the fall. If $W =$ weight of falling body, $v =$ its velocity in feet per second, and $d =$ distance, in feet, the object struck is moved, then

$$\text{force of blow} = \frac{W v^2}{2 g d} + W.$$

No. 39. Fans, Ventilation and Heating.—Fans; Heaters; Shop Heating.

No. 40. Fly-Wheels.—Their Purpose, Calculation and Design.

No. 41. Jigs and Fixtures, Part I.—Principles of Jig and Fixture Design; Drill and Boring Jig Bushings; Locating Points; Clamping Devices.

No. 42. Jigs and Fixtures, Part II.—Open and Closed Drill Jigs.

No. 43. Jigs and Fixtures, Part III.—Boring and Milling Fixtures.

No. 44. Machine Blacksmithing.—Systems, Tools and Machines used.

No. 45. Drop Forging.—Lay-out of Plant; Methods of Drop Forging; Dies.

No. 46. Hardening and Tempering.—Hardening Plants; Treating High-Speed Steel; Hardening Gages; Hardening Kinks.

No. 47. Electric Overhead Cranes.—Design and Calculation.

No. 48. Files and Filing.—Types of Files; Using and Making Files.

No. 49. Girders for Electric Overhead Cranes.

No. 50. Principles and Practice of Assembling Machine Tools, Part I.

No. 51. Principles and Practice of Assembling Machine Tools, Part II.

No. 52. Advanced Shop Arithmetic for the Machinist.

No. 53. Use of Logarithms and Logarithmic Tables.

No. 54. Solution of Triangles, Part I.—Methods, Rules and Examples.

No. 55. Solution of Triangles, Part II.—Tables of Natural Functions.

No. 56. Ball Bearings.—Principles of Design and Construction.

No. 57. Metal Spinning.—Machines, Tools and Methods Used.

No. 58. Helical and Elliptic Springs.—Calculation and Design.

No. 59. Machines, Tools and Methods of Automobile Manufacture.

No. 60. Construction and Manufacture of Automobiles.

No. 61. Blacksmith Shop Practice.—Model Blacksmith Shop; Welding; Forging of Hooks and Chains; Miscellaneous Appliances and Methods.

No. 62. Hardness and Durability Testing of Metals.

No. 63. Heat Treatment of Steel.—Hardening, Tempering and Case-Hardening.

No. 64. Gage Making and Lapping.

No. 65. Formulas and Constants for Gas Engine Design.

No. 66. Heating and Ventilation of Shops and Offices.

No. 67. Boilers.

No. 68. Boiler Furnaces and Chimneys.

No. 69. Feed Water Appliances.

No. 70. Steam Engines.

No. 71. Steam Turbines.

No. 72. Pumps, Condensers, Steam and Water Piping.

THE FOLLOWING TITLES ARE PREPARED, AND WILL BE BROUGHT OUT IN 1911

No. 73. Principles and Applications of Electricity, Part I.—Static Electricity; Electrical Measurements; Batteries.

No. 74. Principles and Applications of Electricity, Part II.—Magnetism; Electro-Magnetism; Electro-Plating.

No. 75. Principles and Applications of Electricity, Part III.—Dynamos; Motors; Electric Railways.

No. 76. Principles and Applications of Electricity, Part IV.—Electric Lighting.

No. 77. Principles and Applications of Electricity, Part V.—Telegraph and Telephone.

No. 78. Principles and Applications of Electricity, Part VI.—Transmission of Power.

No. 79. Locomotive Building, Part I.—Main and Side Rods.

No. 80. Locomotive Building, Part II.—Wheels; Axles; Driving Boxes.

No. 81. Locomotive Building, Part III.—Cylinders and Frames.

No. 82. Locomotive Building, Part IV.—Valve Motion and Miscellaneous Details.

No. 83. Locomotive Building, Part V.—Boiler Shop Practice.

No. 84. Locomotive Building, Part VI.—Erecting.

No. 85. Mechanical Drawing, Part I.—Instruments; Materials; Geometrical Problems.

No. 86. Mechanical Drawing, Part II.—Projection.

No. 87. Mechanical Drawing, Part III.—Machine Details.

No. 88. Mechanical Drawing, Part IV.—Machine Details.

No. 89. The Theory of Shrinkage and Forced Fits.

No. 90. Railway Repair Shop Practice.

MACHINERY'S DATA SHEET SERIES

MACHINERY'S Data Sheet Books include the well-known series of Data Sheets originated by MACHINERY, and issued monthly as supplements to the publication; of these Data Sheets over 500 have been published, and 6,000,000 copies sold. Revised and greatly amplified, they are now presented in book form, kindred subjects being grouped together. The purchaser may secure either the books on those subjects in which he is specially interested, or, if he pleases, the whole set at one time. The price is 25 cents a book.

TITLES AND CONTENTS ON BACK COVER

CONTENTS OF DATA SHEET BOOKS

No. 1. Screw Threads.—United States, Whitworth, Sharp V- and British Association Standard Threads; Briggs Pipe Thread; Oil Well Casing Gages; Fire Hose Connections; Acme Thread; Worm Threads; Metric Threads; Machine, Wood, and Lag Screw Threads; Carriage Bolt Threads, etc.

No. 2. Screws, Bolts and Nuts.—Fillister-head, Square-head, Headless, Collar-head and Hexagon-head Screws; Standard and Special Nuts; T-nuts, T-bolts and Washers; Thumb Screws and Nuts; A. L. A. M. Standard Screws and Nuts; Machine Screw Heads; Wood Screws; Tap Drills; Lock Nuts; Eye-bolts, etc.

No. 3. Taps and Dies.—Hand, Machine, Tapper and Machine Screw Taps; Taper Die Taps; Sellers Hobs; Screw Machine Taps; Straight and Taper Boiler Taps; Stay-bolt, Washout, and Patch-bolt Taps; Pipe Taps and Hobs; Solid Square, Round Adjustable and Spring Screw Threading Dies.

No. 4. Reamers, Sockets, Drills and Milling Cutters.—Hand Reamers; Shell Reamers and Arbors; Pipe Reamers; Taper Pins and Reamers; Brown & Sharpe, Morse and Jarno Taper Sockets and Reamers; Drills; Wire Gages; Milling Cutters; Setting Angles for Milling Teeth in End Mills and Angular Cutters, etc.

No. 5. Spur Gearing.—Diametral and Circular Pitch; Dimensions of Spur Gears; Tables of Pitch Diameters; Odontograph Tables; Rolling Mill Gearing; Strength of Spur Gears; Horsepower Transmitted by Cast-iron and Rawhide Pinions; Design of Spur Gears; Weight of Cast-iron Gears; Epicyclic Gearing.

No. 6. Bevel, Spiral and Worm Gearing.—Rules and Formulas for Bevel Gears; Strength of Bevel Gears; Design of Bevel Gears; Rules and Formulas for Spiral Gearing; Tables Facilitating Calculations; Diagram for Cutters for Spiral Gears; Rules and Formulas for Worm Gearing, etc.

No. 7. Shafting, Keys and Keyways.—Horsepower of Shafting; Diagrams and Tables for the Strength of Shafting; Forcing, Driving, Shrinking and Running Fits; Woodruff Keys; United States Navy Standard Keys; Gib Keys; Milling Keyways; Duplex Keys.

No. 8. Bearings, Couplings, Clutches, Crane Chain and Hooks.—Pillow Blocks; Babbitted Bearings; Ball and Roller Bearings; Clamp Couplings; Plate Couplings; Flange Couplings; Tooth Clutches; Crab Couplings; Cone Clutches; Universal Joints; Crane Chain; Chain Friction; Crane Hooks; Drum Scores.

No. 9. Springs, Slides and Machine Details.—Formulas and Tables for Spring Calculations; Machine Slides; Machine Handles and Levers; Collars; Hand Wheels; Pins and Cotters; Turn-buckles, etc.

No. 10. Motor Drive, Speeds and Feeds, Change Gearing, and Boring Bars.—Power required for Machine Tools; Cutting Speeds and Feeds for Carbon and High-speed Steel; Screw Machine Speeds and Feeds; Heat Treatment of High-speed Steel Tools; Taper Turning; Change Gearing for the Lathe; Boring Bars and Tools, etc.

No. 11. Milling Machine Indexing, Clamping Devices and Planer Jacks.—Tables for Milling Machine Indexing; Change Gears for Milling Spirals; Angles for setting Indexing Head when Milling Clutches; Jig Clamping Devices; Straps and Clamps; Planer Jacks.

No. 12. Pipe and Pipe Fittings.—Pipe Threads and Gages; Cast-iron Fittings; Bronze Fittings; Pipe Flanges; Pipe Bends; Pipe Clamps and Hangers; Dimensions of Pipe for Various Services, etc.

No. 13. Boilers and Chimneys.—Flue Spacing and Bracing for Boilers; Strength of Boiler Joints; Riveting; Boiler Setting; Chimneys.

No. 14. Locomotive and Railway Data.—Locomotive Boilers; Bearing Pressures for Locomotive Journals; Locomotive Classifications; Rail Sections; Frogs, Switches and Cross-overs; Tires; Tractive Force; Inertia of Trains; Brake Levers; Brake Rods, etc.

No. 15. Steam and Gas Engines.—Saturated Steam; Steam Pipe Sizes; Steam Engine Design; Volume of Cylinders; Stuffing Boxes; Setting Corliss Engine Valve Gears; Condenser and Air Pump Data; Horsepower of Gasoline Engines; Automobile Engine Crankshafts, etc.

No. 16. Mathematical Tables.—Squares of Mixed Numbers; Functions of Fractions; Circumference and Diameters of Circles; Tables for Spacing off Circles; Solution of Triangles; Formulas for Solving Regular Polygons; Geometrical Progression, etc.

No. 17. Mechanics and Strength of Materials.—Work; Energy; Centrifugal Force; Center of Gravity; Motion; Friction; Pendulum; Falling Bodies; Strength of Materials; Strength of Flat Plates; Ratio of Outside and Inside Radii of Thick Cylinders, etc.

No. 18. Beam Formulas and Structural Design.—Beam Formulas; Sectional Moduli of Structural Shapes; Beam Charts; Net Areas of Structural Angles; Rivet Spacing; Splices for Channels and I-beams; Stresses in Roof Trusses, etc.

No. 19. Belt, Rope and Chain Drives.—Dimensions of Pulleys; Weights of Pulleys; Horsepower of Belting; Belt Velocity; Angular Belt Drives; Horsepower transmitted by Ropes; Sheaves for Rope Drive; Bending Stresses in Wire Ropes; Sprockets for Link Chains; Formulas and Tables for Various Classes of Driving Chain.

No. 20. Wiring Diagrams, Heating and Ventilation, and Miscellaneous Tables.—Typical Motor Wiring Diagrams; Resistance of Round Copper Wire; Rubber Covered Cables; Current Densities for Various Contacts and Materials; Centrifugal Fan and Blower Capacities; Hot Water Main Capacities; Miscellaneous Tables; Decimal Equivalents, Metric Conversion Tables, Weights and Specific Gravity of Metals, Weights of Fillets, Drafting-room Conventions, etc.

MACHINERY, the monthly mechanical journal, originator of the Reference and Data Sheet Series, is published in four editions—the *Shop Edition*, $1.00 a year; the *Engineering Edition*, $2.00 a year; the *Railway Edition*, $2.00 a year, and the *Foreign Edition*, $3.00 a year.

The Industrial Press, Publishers of MACHINERY,

49-55 Lafayette Street, New York City, U. S. A.

MACHINERY'S REFERENCE SERIES

EACH NUMBER IS ONE UNIT IN A COMPLETE LIBRARY OF MACHINE DESIGN AND SHOP PRACTICE REVISED AND REPUBLISHED FROM MACHINERY

No. 6

A Dollar's Worth of Condensed Information

Punch and Die Work

THIRD EDITION

Price 25 Cents

CONTENTS

Principles of Punch and Die Work, by E. R. MARKHAM 3
Suggestions for the Making and Use of Dies - - 31
Examples of Dies and Punches, by F. E. SHAILOR - 41

The Industrial Press, 49-55 Lafayette Street, New York
Publishers of MACHINERY

COPYRIGHT, 1911, THE INDUSTRIAL PRESS, NEW YORK

MACHINERY'S REFERENCE SERIES

This treatise is one unit in a comprehensive Series of Reference books originated by MACHINERY, and including an indefinite number of compact units, each covering one subject thoroughly. The whole series comprises a complete working library of mechanical literature in which the Mechanical Engineer, the Master Mechanic, the Designer, the Machinist and Tool-maker will find the special information he wishes to secure, selected, carefully revised and condensed for him. The books are sold singly or in complete sets, as may be desired. The price of each book is 25 cents.

LIST OF REFERENCE BOOKS

No. 1. Worm Gearing.—Calculating Dimensions for Worm Gearing; Hobs for Worm Gears; Location of Pitch Circle; Self-Locking Worm Gearing, etc.

No. 2. Drafting-Room Practice.—Drafting-Room System; Tracing, Lettering and Mounting; Card Index Systems.

No. 3. Drill Jigs.—Elementary Principles of Drill Jigs; Drilling Jig Plates; Examples of Drill Jigs; Jig Bushings; Using Jigs to Best Advantage.

No. 4. Milling Fixtures.—Elementary Principles of Milling Fixtures; Collection of Examples of Milling Fixture Design, from practice.

No. 5. First Principles of Theoretical Mechanics.

No. 6. Punch and Die Work.—Principles of Punch and Die Work; Suggestions for the Making and Use of Dies; Examples of Die and Punch Design.

No. 7. Lathe and Planer Tools.—Cutting Tools for Planer and Lathe; Boring Tools; Shape of Standard Shop Tools; Forming Tools.

No. 8. Working Drawings and Drafting-Room Kinks.

No. 9. Designing and Cutting Cams.—Drafting of Cams; Cam Curves; Cam Design and Cam Cutting; Suggestions in Cam Making.

No. 10. Examples of Machine Shop Practice.—Cutting Bevel Gears with Rotary Cutters; Making a Worm-Gear; Spindle Construction.

No. 11. Bearings.—Design of Bearings; Causes of Hot Bearings; Alloys for Bearings; Friction and Lubrication; Friction of Roller Bearings.

No. 12. Mathematics of Machine Design.—Compiled with special reference to shafting and efficiency of hoisting machinery.

No. 13. Blanking Dies.—Making Blanking Dies; Blanking and Piercing Dies Construction of Split Dies; Novel Ideas in Die Making.

No. 14. Details of Machine Tool Design.—Cone Pulleys and Belts; Strength of Countershafts; Tumbler Gear Design; Faults of Iron Castings.

No. 15. Spur Gearing.—Dimensions; Design; Strength; Durability.

No. 16. Machine Tool Drives.—Speeds and Feeds of Machine Tools; Geared or Single Pulley Drives; Drives for High Speed Cutting Tools.

No. 17. Strength of Cylinders—Formulas, Charts, and Diagrams.

No. 18. Shop Arithmetic for the Machinist.—Tapers; Change Gears; Cutting Speeds; Feeds; Indexing; Gearing for Cutting Spirals; Angles.

No. 19. Use of Formulas in Mechanics.—With numerous applications.

No. 20. Spiral Gearing.—Rules, Formulas, and Diagrams, etc.

No. 21. Measuring Tools.—History and Development of Standard Measurements; Special Calipers; Compasses; Micrometer Tools; Protractors, etc.

No. 22. Calculation of Elements of Machine Design.—Factor of Safety; Strength of Bolts; Riveted Joints; Keys and Keyways; Toggle-joints.

No. 23. Theory of Crane Design.—Jib Cranes; Calculation of Shaft, Gears, and Bearings; Force Required to Move Crane Trolleys; Pillar Cranes.

No. 24. Examples of Calculating Designs.—Charts in Designing; Punch and Riveter Frames; Shear Frames; Billet and Bar Passes; etc.

No. 25. Deep Hole Drilling.—Methods of Drilling; Construction of Drills.

No. 26. Modern Punch and Die Construction.—Construction and Use of Subpress Dies; Modern Blanking Die Construction; Drawing and Forming Dies.

No. 27. Locomotive Design, Part I.—Boilers, Cylinders, Pipes and Pistons.

No. 28. Locomotive Design, Part II.—Stephenson Valve Motion; Theory, Calculation and Design of Valve Motion; The Walschaerts Valve Motion.

No. 29. Locomotive Design, Part III.—Smokebox; Exhaust Pipe; Frames; Cross-heads; Guide Bars; Connecting-rods; Crank-pins; Axles; Driving-wheels.

No. 30. Locomotive Design, Part IV.—Springs, Trucks, Cab and Tender.

No. 31. Screw Thread Tools and Gages.

No. 32. Screw Thread Cutting.—Lathe Change Gears; Thread Tools; Kinks.

No. 33. Systems and Practice of the Drafting-Room.

No. 34. Care and Repair of Dynamos and Motors.

No. 35. Tables and Formulas for Shop and Drafting-Room.—The Use of Formulas; Solution of Triangles; Strength of Materials; Gearing; Screw Threads; Tap Drills; Drill Sizes; Tapers; Keys; Jig Bushings, etc.

No. 36. Iron and Steel.—Principles of Manufacture and Treatment.

No. 37. Bevel Gearing.—Rules and Formulas; Examples of Calculation; Tooth Outlines; Strength and Durability; Design; Methods of Cutting Teeth.

No. 38. Grinding and Grinding Machines.

(See inside back cover for additional titles)

MACHINERY'S REFERENCE SERIES

EACH NUMBER IS ONE UNIT IN A COMPLETE LIBRARY OF MACHINE DESIGN AND SHOP PRACTICE REVISED AND REPUBLISHED FROM MACHINERY

NUMBER 6

PUNCH AND DIE WORK

THIRD EDITION

CONTENTS

Principles of Punch and Die Work, by E. R. MARKHAM 3
Suggestions for the Making and Use of Dies - - 31
Examples of Dies and Punches, by F. E. SHAILOR - 41

Copyright, 1911, The Industrial Press, Publishers of MACHINERY, 49-55 Lafayette Street, New York City

CHAPTER I

PRINCIPLES OF PUNCH AND DIE WORK*

Under the head of punch and die work is generally included all the various tools used in blanking pieces from commercial stock; bending stock to shape; drawing out articles from sheet stock; and all the different operations performed with punching, drawing and forming presses. The most common forms of tools to be considered are the dies used for blanking articles from sheet stock, called blanking dies.

Blanking Dies

A set of blanking dies consists of a male die, or punch, as it is generally termed, and a female die, or die block. These terms are generally abbreviated and the set is called a punch and die. Blanking dies are generally considered as belonging to one of three classes: First, plain (or simple) dies; second, gang dies; and third, compound dies.

When punches and dies are used in a punch-press, and are to constitute a part of the regular equipment of the shop, they are held in suitable permanent fixtures. Dies are held in position on the bed of the press by means of a "holdfast," the name of which differs in different shops. Some of the more common names are chair, chuck, bolster, and die holder. Dies large enough to warrant it are clamped to the bed of the press, thus doing away with the necessity for holders. Dies are fastened in place in the die holder by several methods, the most common of which is by means of screws, as shown in Fig. 1, in which *a* is the die and *b* the holder. Having screws on both sides, it is an easy matter to adjust the die, loosening the screws on one side, and forcing the die over by those on the opposite side.

When the die is small, it is generally held in a shoe, as shown in Fig. 2. The manner of fastening the die in the shoe usually depends on the designer. In some shops the shoe is dove-tailed as shown, the angle being from 10 degrees to 15 degrees less than a right angle; the slot is made somewhat tapering. The die is given a corresponding taper and angle on its sides, and, to fasten it in position, it is driven securely in place. The amount of taper given the slot in the shoe must not be great, or the die will jar loose when in use. A taper of one-half inch per foot of length answers nicely. In other shops the shoe is made with a groove, as described above, only it is from ¼ to ⅜ inch wider than the dies, which are held in place by means of a taper key or wedge, as shown in Fig. 3. When making this form it is necessary to make the dies of equal width on their ends. This method does not require so great a degree of accuracy when machining the die block.

* MACHINERY, July, August and September, 1906.

A third method consists in making a shoe having the back of the slot planed at the angle mentioned, while the front wall is made square with the bottom, the die being held with setscrews, as shown in Fig. 4. If this form is used, care must be exercised when laying out the screw holes, so that they do not come in line with the screws in the bolster when the shoe is in its proper place; and, again, the screws must not press on any portion of the die immediately in line with the opening, or it will be closed somewhat when pressure is applied to the screws. Fig. 4 shows the screws pressing on the solid portion of the die.

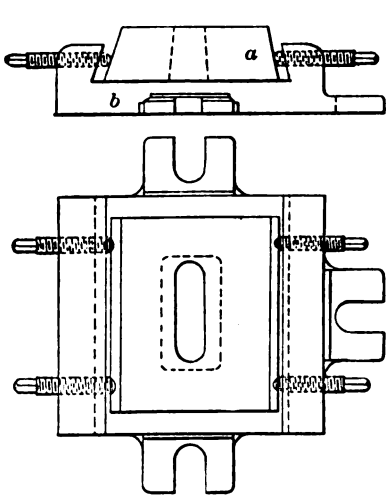

Fig. 1

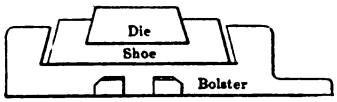

Fig. 2

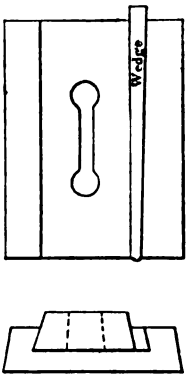

Fig. 3

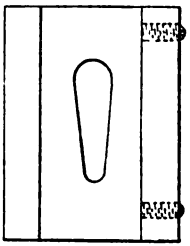

Fig. 4

Machinery, N.Y.

Figs. 1 to 4. Various Methods of Holding Work

Dies which are fastened in bolsters without using a shoe must have their sides machined at an angle, as in Fig. 1, to prevent them lifting from the strain incident to removing the punch when it has pierced the stock. The angle should be from 10 degrees to 15 degrees, some mechanics claiming best results with 20 degrees. The latter, however, seems greater than there is any necessity for on ordinary work.

Kind of Steel Used for Die Work

For most work the stock used in making punches and dies should be a good quality of tool steel. A die that has cost from 5 dollars to 100 dollars for labor is as liable to crack when hardening as though

the same steel had been made into any other form of tool; and in fact its shape and irregular thickness of stock at various points, together with numerous sharp corners that are liable to be present, make a tool that requires extreme care in handling when hardening. A good grade of tool steel, free from harmful impurities, is less liable to crack then an inferior grade, and the slight difference in cost is offset many times by the cost of labor in the die construction. This does not necessarily mean that a *high-priced* steel must be used for this class of work; simply a *good* quality of steel, low in percentage of those impurities which cause trouble when the steel is hardened. When we speak of good, reliable steels, we do not necessarily mean high-priced steel.

If best results are desired when hardening, the steel should be annealed after the outer surface of the piece has been removed and the opening blocked out somewhere near to shape.

In all shop operations true economy should always be practiced, and many times this may be done by a saving of tool steel. If a die is

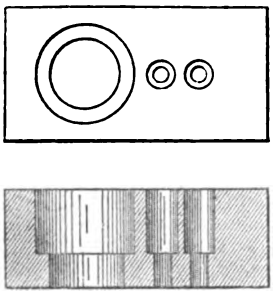

Fig. 5. Cast Iron Body Die, used with Tool Steel Bushings

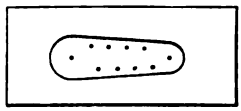

Fig. 6

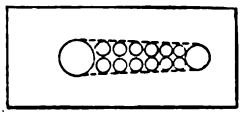

Fig. 7

Figs. 6 and 7. Method of Removing the Stock in a Solid Die

like Fig. 5, a saving may be effected by making the body of cast iron and inserting bushings of tool steel; and if we wish at any time to make a new die, we simply make the bushings, and if ordinary care is taken, the holes will be concentric and consequently the proper distance apart, so there will be no necessity of altering the location of the punches, as might be the case if a die made of a solid piece was hardened.

General Principles of Die Making

When a number of dies are to be made to fit the same holder, they may be planed to size in the bar and then cut apart by means of the cold-sawing machine. It will be necessary to plane again the side of dies that must fit a shoe of the style shown in Fig. 2, as one end must be wider than the other. This may be effected very readily by having a strip of cast iron planed to the proper taper to place the die on when planing or milling. The face of the die must be smooth in order that the outline traced on it may closely correspond to the templet. If the surface is a succession of ridges, the scriber will not closely

follow the edges of the pattern, and the figure traced will be larger than desired. After the face has been made smooth by planing, grinding or filing, the surface may be coated with blue vitriol solution, or it may be heated until it assumes a distinct straw or blue color, and the outline of the piece to be punched laid out.

If the die is what is known as a solid die, that is, made from one piece of stock, it may be laid off and prick-punched as in Fig. 6, after which holes may be drilled, leaving the face of the die as in Fig. 7,

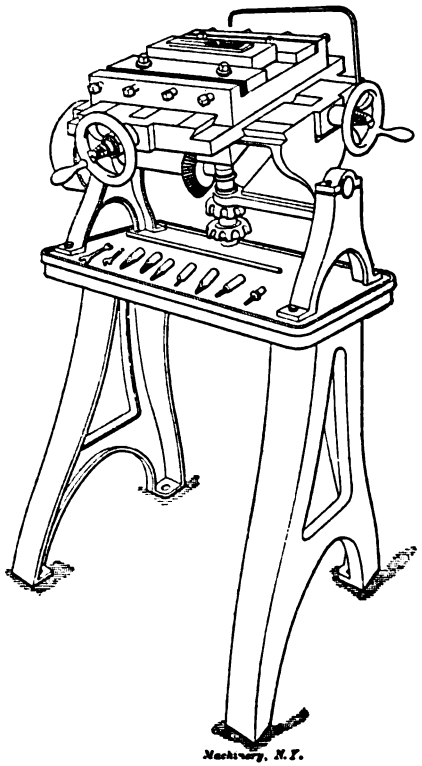

Fig. 8. Die Milling Machine

after which the core may be removed. When drilling for the opening, first drill any portions which are to be left circular or semi-circular in shape. These are then reamed from the opposite side with a taper reamer that will give the desired amount of clearance. When drilling to remove the core mentioned, some tool-makers use drills of sizes that break into the next hole. After drilling all way round, the core drops out of its own accord. If this method is adopted, best results follow the use of the straight-fluted drill, Fig. 9. Others drill with drills of the size of the pilot of a counterbore, and after drilling all the holes, the counterbore is run through. Of course, it is understood

that in laying off for the holes, they are located so that the counterbore breaks into the next hole. A third method consists of laying off and drilling holes so that there is a little stock between the holes after drilling, which is broken out by means of a drift driven in from each side until the cuts meet. In this way the stock is cut away and the core removed.

After taking out the core, the die may be placed in a die milling machine, or a die sinking machine, and by the use of a tapered milling cutter the stock may be removed and the desired angle of clearance given the walls of the hole. The angle of clearance necessary for best results cannot be arbitrarily stated, but varies according to the character of the work to be done with the die. In the absence of either of the milling machines mentioned, a universal or a hand miller may be used. There are various slotting devices which may be attached to universal milling machines which are used advantageously on work

Fig. 9

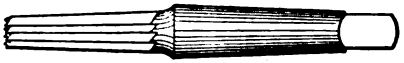

Fig. 10

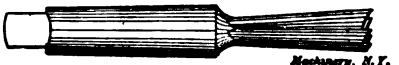

Fig. 11

Figs 9, 10 and 11. Tools used in Die-making Machines

of this character. During the past few years several vertical filing machines have been placed on the market which are recommended highly for the purpose of working the openings of dies to shape. If a die milling machine, Fig. 8, is used, the form of taper milling cutter shown in Fig. 10 is employed. As the milling cutter is driven by a spindle beneath the die, the cutting portion extending up through the opening, with the face of the die uppermost, the small part of the cutting portion should be at the end of the cutter. If a die-sinking machine, Fig. 12, is used, a cutter like Fig. 11 is employed. After working the opening to shape and size as nearly as possible with the milling cutter, it may be finished by filing.

Clearance

When finishing the opening to shape and size it is necessary to get the desired clearance and to have the walls of the opening straight, as at *a a* in Fig. 13, rather than rounding as represented at *a a* in Fig. 14. The amount of clearance differs for various work and ranges from one-quarter to three degrees. The greater amount is seldom given unless it is necessary that the blank fall from the die each time one is punched. Another instance where it is desirable to give excessive clearance is where a punch with a crowning face, as in Fig. 15, is used for punching stiff stock.

When a milling machine with a slotting attachment, Fig. 17, is used, sharp corners may be cut to the line, as may certain irregular sur-

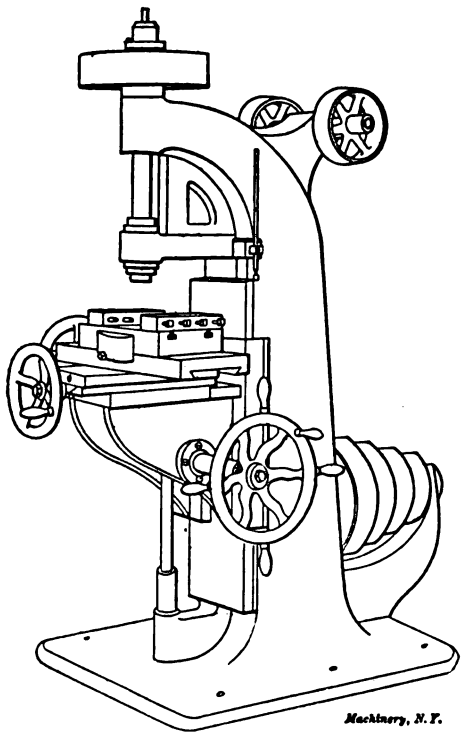

Fig. 12. Die-sinking Machine

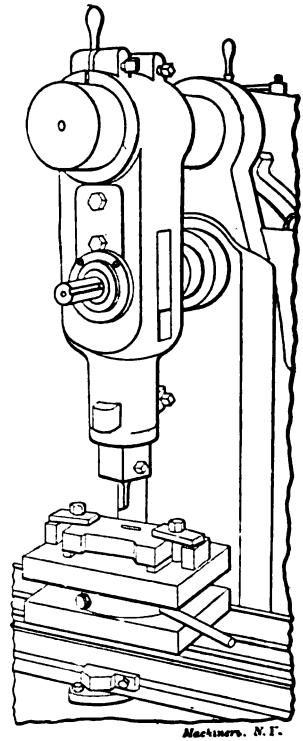

Fig. 17. Die-slotting Attachment for Milling Machine

Fig. 13

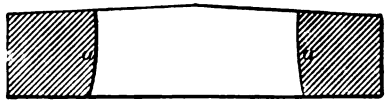

Fig. 14

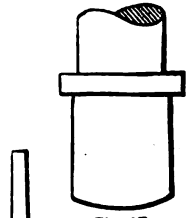

Fig. 15

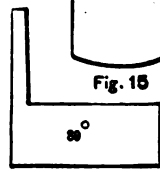

Fig. 16

Figs. 13 and 14 Correct and Incorrect Relief. Fig. 15. Punch Crowned for Stiff Stock. Fig. 16. Templet for Gaging Relief

faces which could not be shaped with milling cutters. Of course, it would be necessary to have cutting tools of the proper shape to ma-

chine the forms mentioned, the advisability of making which would depend on whether it would be cheaper to make the necessary tools and to do the machining, or file to the desired shape. A fixture known as a die shaper, whose action resembles the slotting device described above, is made to attach to a milling machine and works the same as the other attachment.

In order to gage the angle of clearance it is advisable to have angle gages. Several of these may be made and kept in the tool chest and should be of the more common angles used. They may be of the form shown in Fig. 16, with the angle stamped on the heavier portion.

Shear of Punches and Dies

The cutting faces of dies are given shear for the same reason that the teeth of milling machine cutters are cut helical or spiral. The shear makes it possible to cut the blank from the sheet with less expenditure of power; it also reduces the strain on the die and punch. While it is customary to shear the face of the die when possible, there are instances when it is advisable to leave the face of the die

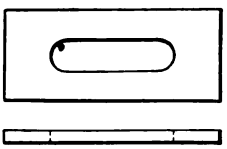

Fig. 18. A Piece of Work for which the Punch Should be Provided with Shear

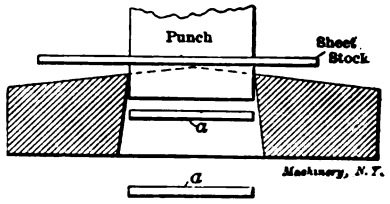

Fig. 19. A Case where the Shear should be on the Die

flat and shear the punch. The shear is given to the *punch* when the stock around the hole is the desired product and the stock removed is scrap, as in Fig. 18. The face of the die is sheared when the portion pressed through the die is the product, as at *a a* in Fig. 19, which also illustrates the shear of the die.

The amount of shear necessary to give a die to obtain best results depends a great deal on the thickness of the stock to be punched, and also on the length of the piece to be removed, and on the power of the press. The shear of a die usually commences at the center and extends toward each end, as in Fig. 19, the punch being left flat on its face. When the punch descends, the cut commences at the highest point of the die, which is in the center, and continues toward each end. The portion at the center will have been removed from the stock before the cut has progressed very far toward the ends, and in this manner the cut is distributed over the length of the piece, reducing the strain on the press and tools.

The diemaker, if he works to drawings furnished him by the draftsman, makes the thickness of die and length of punch to correspond with dimensions. However, it is customary in shops where few dies

are made and no draftsman is employed, to give the diemaker or toolmaker an idea of the shape and dimensions wanted, or possibly a templet, and he is required to go ahead and "work out his own salvation." In such cases the workman must first find the dimensions of the press to be used, the distance from the bed to the ram, the length of stroke of the ram, the amount the ram may be adjusted, the thickness of the bolster, and particulars about any shoes that are to be used. These things should be carefully set down and kept where the workman may have access to them at any time. If there are several presses, each should be marked and the dimensions of each carefully recorded, according to the work of the individual machine. If this precaution is followed and the dimensions taken into consideration when machining the die and punch, there need be none of the trouble sometimes experienced, such as a die too thick or a punch too long, or the reverse, for the press in which they are to be used.

Stripping the Stock

When articles are punched from sheet stock, or in fact from any stock where the scrap is around the punch, the stock will be carried

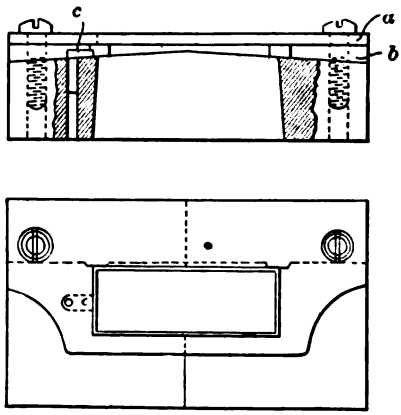

Fig. 20. Example of Stripping Plate

upward when the punch ascends, unless some device is furnished to prevent its doing so. Fig. 20 shows an arrangement *a* called a stripper, or stripping plate, the opening in this being a trifle larger than the punch. The stripper plate must be securely fastened to the die, or the die holder, and must be stiff enough to prevent its springing when in use. Between the stripper and the die (at *b*) is a guide against which the stock being operated on rests, and which determines the amount of scrap at the back edge of the sheet. This guide is made of a thickness that insures the space between the die and stripper being somewhat greater than the thickness of the stock used; in fact, the space must be sufficient to allow the stock to move along

easily even when the surface is made somewhat irregular by the operation of punching. At *c* is a guide pin or stop against which the stock is placed to determine the endwise setting.

Templets

When dies are made for producing pieces that must be of a given size and shape it is necessary to have a piece of the same shape and size to work to; this is called a templet. At times it requires a considerable degree of skill to make a templet that will answer for the work in hand. As an example, the templet shown in Fig. 21 may be referred to. After blanking and turning the ear at the top of the piece to be made, it was to be closed on a groove in an axle, as shown in Fig. 22. After closing, the outside of the washer was supposed to run about true. The die was made to a templet and it was found less difficult to make the die than the templet. In this instance it was necessary to make two pieces of the desired shape exactly alike, one of which was closed on the model axle and tested. The points that were not right were located on the one that had not been closed up. Then others were laid out from it, due allowance being made for the im-

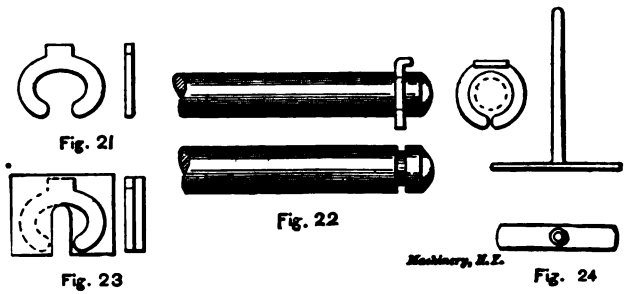

Figs. 21 to 24. Example of Templet Making

perfections of the first. When making, two pieces of stock were placed together, and one half was worked to the laying out lines as in Fig. 23. After the other half had been blocked out somewhere near the line, the pieces were reversed and each half that had been blocked out was finished to the finished half, as indicated. In this way the ends were exactly alike and the two being machined, or filed together, were, of course, alike. When one was forced down or closed on the axle and was found correct, the other answered for the templet to be used in laying out the die, and afterward to fit the opening, too. While the example related was comparatively simple, it did not appear altogether simple to one not accustomed to that class of work, and it serves to illustrate the idea brought out.

In order that templets may be easily handled, it is customary to attach some form of handle to them, which is sometimes done by drilling and tapping a hole in the templet, and cutting a short thread on a piece of wire which is screwed into the tapped hole. Another common method is to attach a piece of wire by means of a drop of solder, as

shown in Fig. 24. This method is open to the objection that the wire must be removed from the templet when it is used in laying out the punch, as it is necessary, when the templet differs in shape on two edges, to lay opposite sides of the templet against punch and die.

Sectional Dies

Dies are many times made in two or more sections in order to facilitate the operation of working the opening to shape. In other cases the die, if solid, would be so large as to render it well-nigh impossible to harden it in a shop with only the usual facilities for doing work of this class. And then again if it should go out of shape in hardening, it would be a difficult task to remedy the defect. If made in sections, as shown in Fig. 25, it would be possible to peen or grind to the original shape with little trouble.

A die of the design shown in Fig. 26 may be made sectional because it is much easier and cheaper to make than if solid. The sec-

Fig. 25. Sectional Die held by Screws

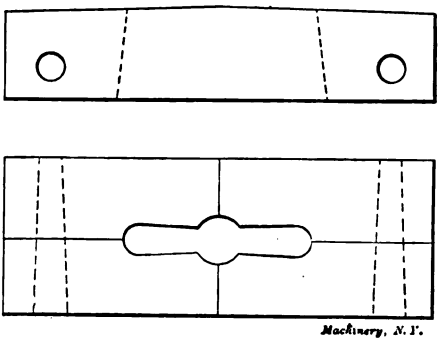

Fig. 26 Sectional Die Located by Taper Pins

tions are held in their proper location by dowel pins. They are held together by the shoe which secures them in the press. If the die is comparatively small, the circular shapes at each end and center are produced by first drilling, and then reaming from the back, with a reamer of the proper angle. The sections may be separated and the balance of the stock removed in a shaper, planer or milling machine. When this stock is removed the die may be held at the proper angle to produce the desired clearance. After machining as close as possible, the surfaces may be finished with a file and scraper.

When the opening has been finished to the templet, the top may be given the proper *shear*. In order to facilitate the operation of grinding when the die is dull, the stock may be removed, as in Fig. 27, leaving about ¼ inch on each side of the opening at the narrowest portion.

There are certain forms of dies where it is not feasible to cut away a portion of the top, as shown, but where it can be done it saves much time when grinding.

Correcting Mistakes Made in Dies

Should the workman, through misunderstanding or carelessness, make the opening too large at any point, he should not attempt to

Fig. 27. Method of Cutting away the Top of Die to Facilitate Grinding

peen the stock cold, as is sometimes done, for while it is possible to do this and then finish the surfaces in such a manner that it will be scarcely noticeable, the stock directly below where the peening took place will almost surely crack during the life of the die.

Should the mistake referred to occur, heat the die to a forging heat, when the stock may be set in without injury to the steel. When set-

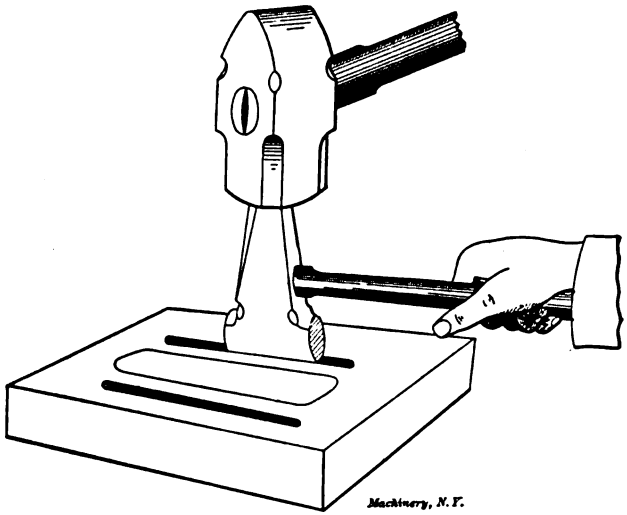

Fig. 28. Closing up a Die which is too Large

ting in, a blacksmith's fulling tool may be used, this placed on the face of the die and struck with a sledge, as in Fig. 28. If there is objection to disfiguring the top surface of the die, this method can, of course, not be used, but if the top is to be cut away, as shown in Fig. 27, the depression made by the fulling tool would be entirely cut away. It is never good practice to bend, set in, or otherwise alter the form of steel when cold, if it is to be hardened, as such attempts nearly always end in a manner entirely unsatisfactory.

Reworking Worn Dies

When a die becomes worn so that the opening is too large, or the top edge of the walls of the opening are worn so that the die is "bell muzzled," it may be heated to a forging heat, set in with a fulling tool, or a punch of the desired shape, after which it is reheated to a low red and annealed. After annealing it is reworked to size. This reworking, care and judgment being used, gives excellent results, and effects a considerable saving, as otherwise it would be necessary to make new dies, while the die may be reworked at a fraction of the expense of a new one.

When making a sectional die, it is possible in case the opening is a trifle too large, to work a little stock off the faces that come together, provided the outer edges have not been planed to fit the holder; also,

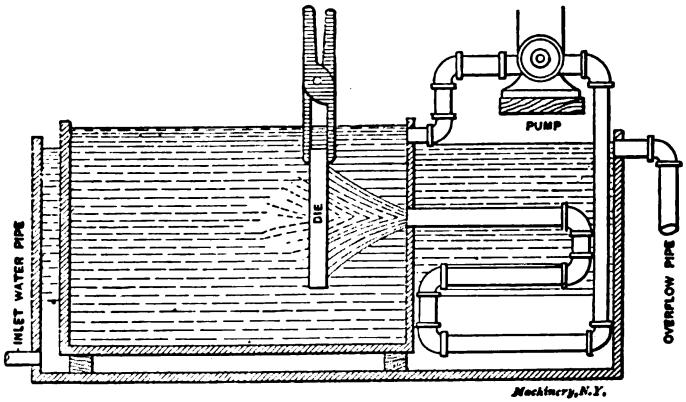

Fig. 29. Arrangement of Oil Cooling Bath

if it is allowable, these surfaces may be cut away the desired amount, and a strip of stock of the proper thickness placed between the die and holder. Considering the liability of a mistake taking place when the beginner is doing work of this kind, it is, generally speaking, advisable to leave the fitting of the die to the holder until the opening has been worked to size.

Hardening Dies

There is probably no one article the hardener is called on to harden that he dreads any more than a die. If he succeeds in bringing it out of the bath without a crack, he gives the credit to "luck"; and if it cracks, it is almost what he was looking for. This is an unfortunate condition, as there is no need of losing dies in the operation of hardening. Of course, if a piece of imperfect steel is used, it is almost sure to go to pieces in the bath; but if the steel is of the proper quality and in good condition, there need be no trouble when hardening.

When handling work so diversified in character as the class under consideration, the operator should not assume that it is possible to

adopt any set method which is not to be deviated from, as there is no one class of work that calls for a greater exercise of skill and common sense than the proper hardening of punch-press dies, unless it be the hardening of drop-forging dies. For most dies of this character, however, and especially for those complicated in form, and which must retain as nearly as possible exact measurements, there is no method that will give the satisfaction derived from the method known as "pack-hardening."

Pack-hardening

When pack-hardening such pieces, best results are derived from the use of a bath of raw linseed oil of the type shown in Fig. 29, in which the oil is kept from heating by being pumped through a coil of

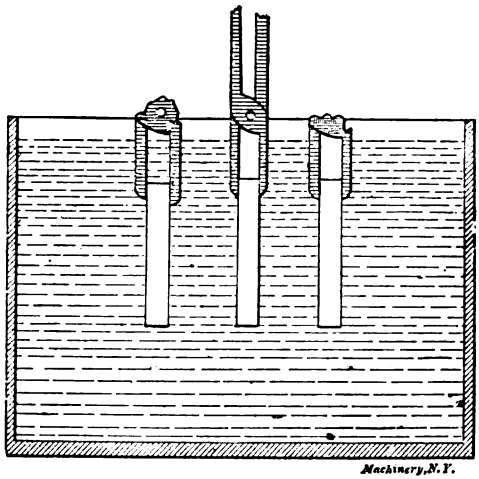

Fig. 30. Dipping the Work in the Bath

pipe in a tank of water, and then forced into the bath and through the opening as shown. If such a bath is not at hand, good results can be obtained where the oil is not agitated but the die is swung back and forth and moved up and down somewhat in the oil. If many dies are to be hardened this way, however, it is necessary to have a bath of generous proportions, or else several smaller baths, as it would not do to use the oil after it becomes hot, although oil that is heated somewhat will conduct the heat from steel more rapidly than would be supposed, and is better adapted for hardening than if it is extremely cold.

General Directions for Hardening

The secret of success in hardening dies by the ordinary method consists in getting as nearly as possible a *uniform* heat. To accomplish this the die cannot be heated very rapidly, as the edges and lighter portions would heat more rapidly than the balance of the piece. Unequal contraction, when quenching in the bath, follows un-

even heating, and unequal contraction causes the die to crack. High heats cause cracks in steel. Then, again, high heats render the steel weak, and as a consequence it cannot stand the strain incident to contraction of one portion of the steel when another portion is hard, and consequently rigid and unyielding. Steel is the strongest when hardened at the proper temperature, known as the refining heat.

Cold baths are a source of endless troubles when hardening dies. They will not make the steel any harder than one that is heated to a temperature of 60 or 70 degrees, or even warmer than this, but they will cause the die to spring or crack where the warmer bath would give excellent results. A bath of brine is to be preferred to one of water for this class of work, the brine being heated to the temperature mentioned above.

Have the bath of generous proportions. When the die is properly heated, lower it into the bath as shown in Fig. 30, moving it slowly back and forth to the positions shown, which causes the liquid to circulate through the openings, thus insuring the walls of the opening hardening in a satisfactory manner. Then again, moving back and forth brings both surfaces of the piece in contact with the liquid, causing them to harden uniformly, and preventing an undue amount of "humping," as would be the case if one side hardened more rapidly than the other. The workman must, of course, exercise common sense when doing this class of work. If he were to swing a die containing sharp corners, intricate shapes, and fine projections as rapidly in the bath as it would be safe to do were the opening round or of an oval shape, it might prove disastrous to the die, as such a shape would give off its heat very rapidly, and as a result the fine projections and sharp corners would harden much quicker than the balance of the die; and as they continued to contract, the projections would fly off, or the steel would crack in the corners. To avoid this, have the bath quite warm, move the die slowly, and as soon as the portions desired hard are in the proper condition, remove the die and plunge it in a bath of warm oil, where it may remain until cooled to the temperature of the oil.

Most of the trouble experienced when hardening dies is occasioned by one of two causes—possibly both. The first cause is uneven heating, the second, cold baths.

The Punch

The method of holding the punch depends on its shape and the style of die, as well as on the holders at hand in the shop. If it can be made as in Fig. 34, with a shank to fit a holder which enters an opening provided in the lower end of the ram, it will be comparatively simple to make. At other times it will be necessary to attach several punches to a holder, as in Fig. 31. When these punches can be attached to the holder by means of round shanks it will be found a satisfactory method. For many forms of punches, however, this would not answer, it being found necessary to attach them by screws, dowel pins being provided to keep them in position, as in Fig. 32 at *a*. Then, again, it is sometimes thought advisable to use a fixture for

holding the punches, having a dove-tailed slot cut in the face as in Fig. 33, the punches having a tongue which is fitted in the slot. The punches are securely held by means of setscrews. As the opening in the lower end of the ram to receive the punch holder of small presses is ordinarily square, the holder is made of a shape that fits the opening, the hole to receive the punch being round. At times the holder is

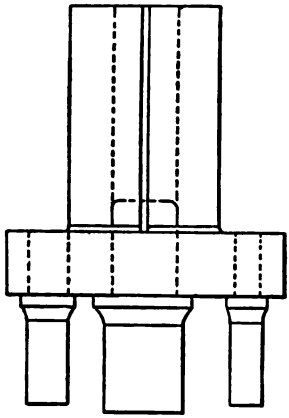

FIG. 31

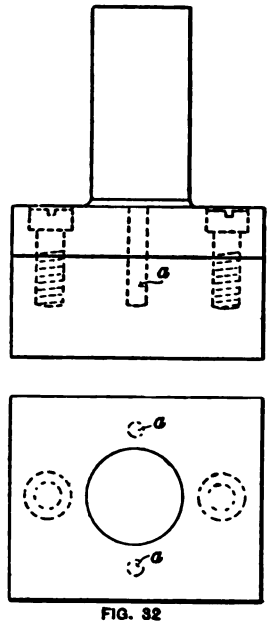

FIG. 32

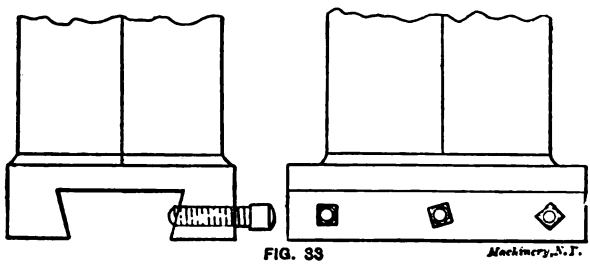

FIG. 33

Figs. 31, 32 and 33. Various Methods of Holding Punches

split as in Fig. 35. When pressure is applied, the holder is closed onto the shank of the punch, thus holding it securely. At other times the holder is made without splitting, and a setscrew placed in the lower end of the holder, Fig. 36. This setscrew, when screwed against the punch, holds it securely in place.

It is customary to make the die, and harden it, and then make the

punch and fit it to the die. After squaring the end of the punch that is to enter the die, the surface is colored with blue vitriol solution, or by heating it until a distinct brown or blue color is visible, after which the desired shape is marked on the face by scribing. If it is considered advisable to lay out the shape by means of the templet, it may be done; but if the templet is not of the same shape on its two edges, or the ends are different from one another, it will be necessary to place the opposite side against the punch, from that placed against the die when marking. However, it is the custom many times to mark the punch from the die. If the die is given shear, it is necessary to mark the punch before the face of the die is sheared. When

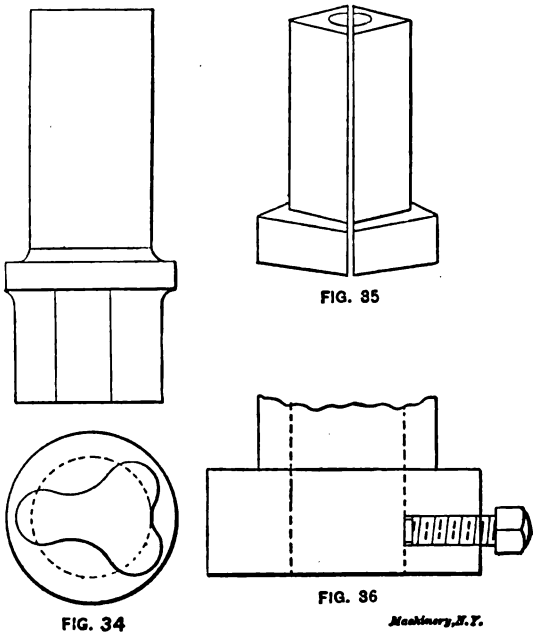

Figs. 34, 35 and 36. Punch and Punch-holders

laying out several punches from a die which has a number of impressions, it is necessary to lay out the punch from the die.

The surplus stock on the punch is removed by filing, chipping, milling or planing, as the case may be, until it is but a trifle larger than the opening in the die. The end is then chamfered somewhat so that it enters the opening, and the punch is forced into the die a little way. It is then removed, the stock cut away, and the punch forced in again, this time somewhat further. This method is continued until the punch enters the die the required distance. It is then filed or scraped until the desired fit is obtained. When punch and die are to be used for punching paper, soft metals, or thin stock, the punch must fit nicely. If the stock is thick, or stiff, the punch may be somewhat looser.

For stock ¼ inch thick it is the practice many times to have a 1/32-inch space between the punch and die at all points. The exact amount cannot be stated arbitrarily, it being governed by existing conditions.

There are instances in which it is advisable to make punches somewhat differently from the method described. When the nature of the stock to be punched is such as to cause it to cling to the punch, making the operation of stripping difficult, to the extent that any stripper plate put on the die would be bent, or the end of the punch pulled off during the operation, the punch may be made straight for a distance that allows of grinding several times; then the portion immediately above this may be given a taper. This tapered portion of the punch is intended to enter the stock, *but not the die.* Its action is to increase the size of the opening somewhat, thus making the operation of stripping possible without endangering either the stripper or the punch.

Advisability of Hardening Punches

There are various opinions among practical men as to the advisability of hardening punches. For most jobs it is the custom to do so, though there are some mechanics who consider it advisable to harden them, and others who do not. There are instances where punches work well either way, and in such cases it is, of course, a matter of opinion. If good results follow the use of a soft punch it may be used, and as the punch wears, it is upset and sheared into the die.

There are times when a soft die and hardened punch work well, and times when a hardened die and soft punch give good results. At other times both punch and die may be left soft. Very large punches and dies for hot trimming of drop forgings are sometimes used, where both are in a soft condition, and they stand up properly. The shape of these, together with the size, often make it impracticable to harden them. It would not be advisable to state that such and such dies or punches should be hard or soft; it must be determined by the circumstances under which they are to be used, and the decision is a matter of experience on that particular work.

Directions for Hardening Punches

If punches are to be hardened—and it is generally considered best—they should be very carefully heated. It must be borne in mind that punches are subjected to great strain, consequently they should be heated uniformly, and to as low a temperature as will give desired results, thus making them as strong as possible. Heat slowly to avoid *overheating* the corners, as these are subjected to the greatest strain. The distance we should harden a punch depends on the shape and size, and the use to which it is to be put. If it is a piercing punch of the form shown in Fig. 37, it should be hardened the entire length of the portion marked *a* to avoid any tendency to bend or upset when in use. If it is of a form that insures sufficient strength to resist any tendency to upset when in use, as is the punch illustrated in Fig. 38, then it need not be hardened its entire length.

Pack-hardening makes an admirable method for hardening punches for most work, but for piercing punches of the type in Fig. 37 it is not advocated, as the whole structure of the steel should be as nearly as possible alike. Such punches should be heated in a muffle furnace, or in a tube in the open fire, turning occasionally to insure uniform results, for not only can we heat a piece more uniformly if it is turned several times while heating, but a fact not generally known is that a cylindrical piece of steel heated in an ordinary fire without turning

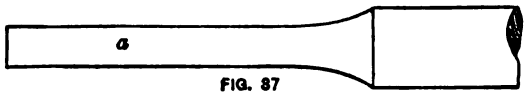

FIG. 37

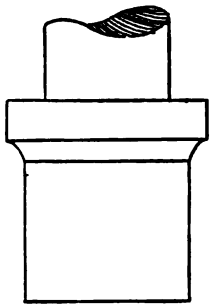

FIG. 38

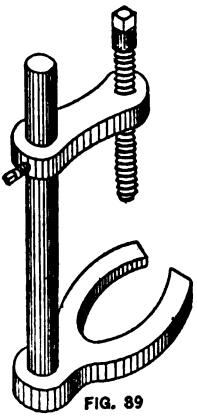

FIG. 39

Machinery, N.Y.

Figs. 37 and 38. Shapes Requiring Different Treatment in Hardening.
Fig. 39. Clamp Used when Scribing Die Outline on Punch

while heating will many times show softness on the side that was uppermost in the fire, no matter what care was taken when heating and dipping. If it is reheated with the opposite side uppermost, *that* will be found soft if tested after hardening, while the side that was soft before will be *hard*. The smaller the punch the more attention should be given to the condition of the bath. Luke warm brine is the best. Work the punch up and down and around well in the bath.

Tempering Punches

It is the custom of many mechanics to draw the temper of punches of the description shown in Fig. 37, to a full straw on the cutting end, but to have the temper lower further up the punch. Better results follow, however, if the punch is left of a uniform hardness its entire length of slender portion, as it is then of a uniform stiffness, and the liability of springing, especially when punching stiff or heavy stock, is reduced to a minimum.

It is generally considered good practice to temper the punch so that it is somewhat softer than the die; then, if from any accident the two

come in contact, the die will in all probability cut the punch without much injury to itself. There are exceptions to this, however. In many shops were large numbers of dies which are hardened are used, it is customary to have the one which is the more difficult to make the harder; so it will cut the other if they come in contact with each other.

In order to hold the die and punch blank firmly together when

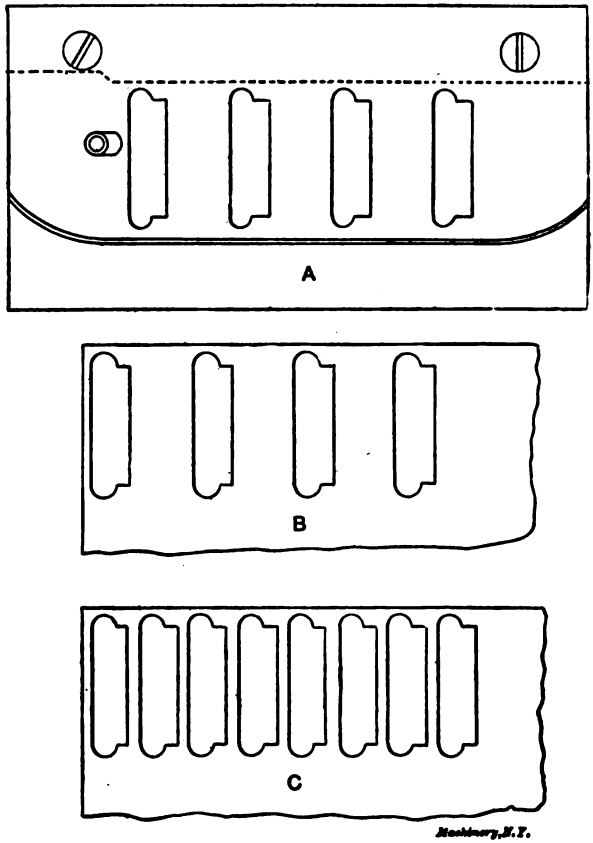

Fig. 40. Multiple Die, and Stock Cut in Same

marking the shape on the face of the punch, a very convenient fixture known as a die clamp, shown in Fig. 39, is used. When the two are secured by means of this clamp, it is possible to move them around so as to get at the various portions where we wish to scribe.

Multiple Dies

A reduction in the cost of manufacture is often made possible by the use of multiple dies, whereby two or more pieces are punched out at a time. In punching perforated steel work it is no uncommon thing

to see punches and dies in use where several hundred punches are working into one die.

If an article, for example, of the form shown in the die in Fig. 40, were to be punched in lots of several thousand, the die should punch a number at a stroke. Such a die and the stock left are shown in Fig. 40, where the die is shown at *A* and the stock after the first punching at *B*. It will be noticed that the distance between the openings is considerable. This is necessary, as it would not be possible to place the openings in the die as close as they should be to econo-

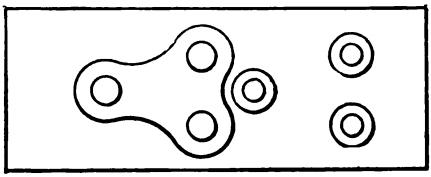

PLAN OF PUNCH

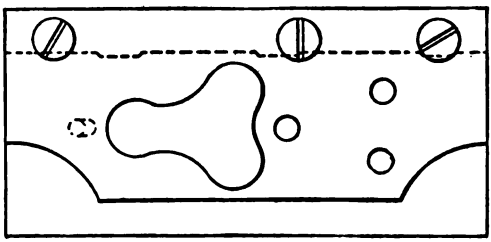

PLAN OF DIE *Machinery, N.Y.*

Figs. 41 and 42. Gang Punch and Die

mize stock, since there would not be stock enough between to insure the die sufficient strength to stand up when working. For this reason the openings are located as shown. After punching as shown at *B*, the stock is moved along the right distance for the intervening stock to be punched out, as at *C*.

Gang Dies

If it were desirable to punch a piece like that at *a* in Fig. 43, it would be possible to make a blanking die and punch which would produce the blank of the right size and shape, but without the holes; then, by means of another die, with three punches working into it, we could punch the holes. It is apparent that such a method would be more expensive than one that made it possible to punch the holes and the piece at one passage of the stock across the die. This may be done by the use of a die of the description shown in Figs. 41, 42 and 43. When using this die the stock is placed against the guide and just far enough to the left so that the large punch *b* will trim the end. Then, when placed against the stop or gage pin *c*, bring the guide pins in end of punch *b* in line with the holes punched at the first stroke of the press at the time the end was trimmed.

When the stock is purchased of the proper width for one piece, it is fed through and the scrap thrown aside. At times it is purchased just wide enough for two pieces, in which case one edge is placed against the guide *d* and the stock fed through; after which it is turned over and fed through with the opposite edge against the guide, thus using all the stock except such portion as necessarily becomes scrap.

However, if the stock is purchased in the commercial sheet, it is necessary to trim the edges every time a row is punched along each. If no power shears are located handy to the press this may prove to be a more costly operation than the punching, and no matter how conveniently such a shear may be located, the operation adds a con-

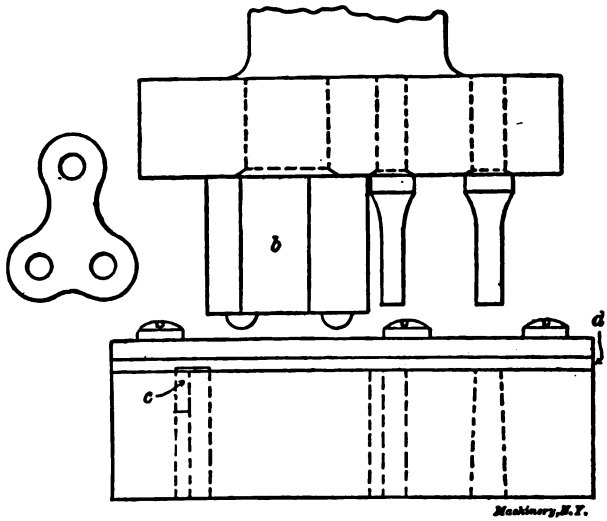

Fig. 43. Elevation of Gang Punch and Die shown in Plan in Figs. 41 and 42

siderable cost to the product. To avoid this trouble and expense another punch and opening in the die may be added. The object of this punch is to remove the scrap between the openings in this sheet and also trim the edge of the sheet, thus making it straight and in condition to bear against the guide on the die. The die and punch with the addition mentioned are shown in Fig. 44. When using a trimming punch as described above, it is necessary to use a stop of the description shown at *b*. The end of the scrap striking this governs the location of the stock, and when the punch descends the scrap is cut away.

When making dies of this class it is necessary to have the blanking die *a* the longer in order that the locating pins on the end may engage in the holes in the stock and locate it right before the other punches reach the stock. It is also necessary to place the gage pin, so that the stock will go a trifle further than its proper location—say 0.010 inch. Then, when the locating pins engage with the holes, they draw

the stock back to its proper location; whereas if the tool-maker attempted to locate the stop exactly, any dirt or other foreign substance getting between the end of the scrap and the stop would cause trouble.

Bending Dies

While it is possible, in certain cases, to bend articles during the operation of punching, it is usually necessary to make a separate operation of bending. There are instances where bending fixtures which may be held in a bench vise, or attached to the bench, answer the

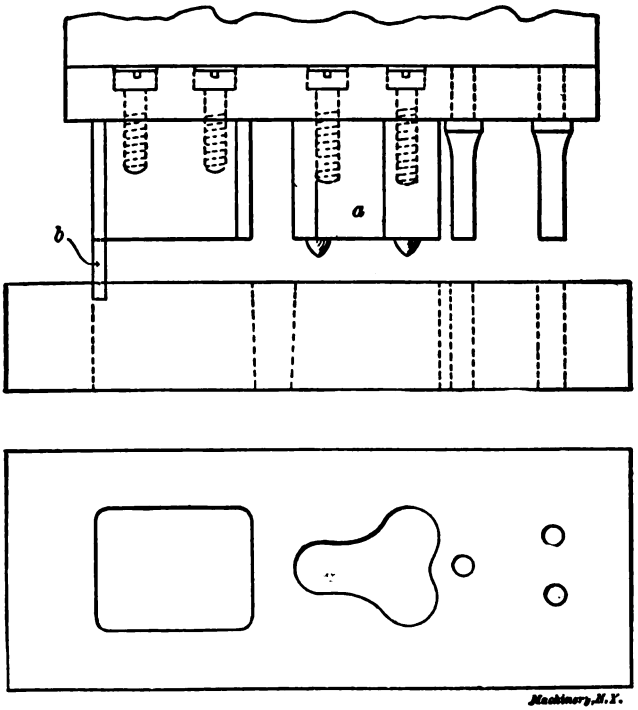

Fig. 44. Gang Punch Arranged to Use Sheet Stock

purpose as well and allow the work to be done more cheaply than if bending dies were used. But as a rule the die used in a press provides the more satisfactory method, and allows the work to be done at a fraction of the cost.

It is sometimes possible to make the dies so that the various operations can be done in different portions of the same die block, the piece of work being changed from one portion to another in order as the various operations are gone through. At other times it is necessary to make several sets of bending dies, the number depending on the number of operations necessary. When a "batch" of work has been run

through the first die, it is removed from the press and the next in order placed in, so continuing until the work has been brought to the desired shape.

When a comparatively small number of pieces are to be bent to a shape that would require a complicated and consequently costly die in order that the work might be done at one operation, it is sometimes considered advisable to make two dies, which are simple in form and inexpensive to make, to do the work. At times the design of the press is such that a complicated die could not be used; and as a result additional dies of a simpler form, and which can be fitted in the press, must be made.

We will first consider the simpler forms of bending dies. Fig. 45 represents a die used in bending a piece of steel, *A*, to a V-shape, as at *B*. In the case of a die of this form it is necessary to provide an

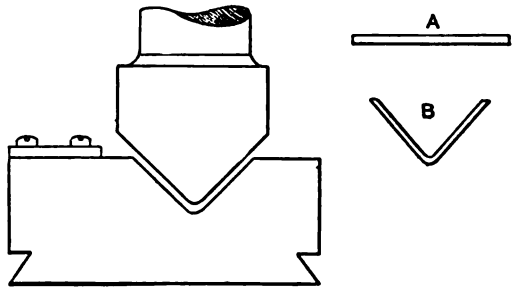

FIG. 45

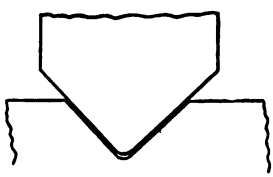

FIG. 46

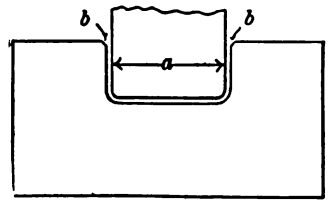

FIG. 47 Machinery, N.Y.

Figs. 45, 46 and 47. Examples of Bending Dies

impression of the proper shape as shown; this impression, if the die is to be used for bending stiff stock, must be of a more acute angle than if stock having little tendency to spring back when bent to shape be used. Under ordinary circumstances the upper portion or punch would be made of the same angle as the die. It is necessary to provide guides and stops as shown to locate the work properly.

If the stock used in making the pieces is of a high grade and the product is a spring or similar article which must be hardened, it will be found necessary to cut away the die somewhat in the bottom of the impression, making it a little different in shape from the punch, as shown in Fig. 46. This is to prevent crushing or disarranging the grain of the steel to an extent that would cause it to break when in use.

If the die is of the form shown in Fig. 47, it is, of course, necessary to make the length *a* of the punch shorter than the distance across the opening of the die. It must be somewhat shorter on each end than the thickness of the stock being worked. If possible, the upper corners *b b* of the die should be rounded somewhat, as the stock bends so much easier and with less danger of mutilating the surface than when the corners are sharp. When bending thin ductile metal the corners need but little rounding. If the stock is thick, or very stiff, a greater amount of rounding is needed.

While the form of bending die in Fig. 45 answers for ordinary work, there are jobs where such a die would not insure a degree of accuracy that would answer the purpose, and it will be found necessary to make one similar to Fig. 48, where a riser or pad *a* is provided, as shown.

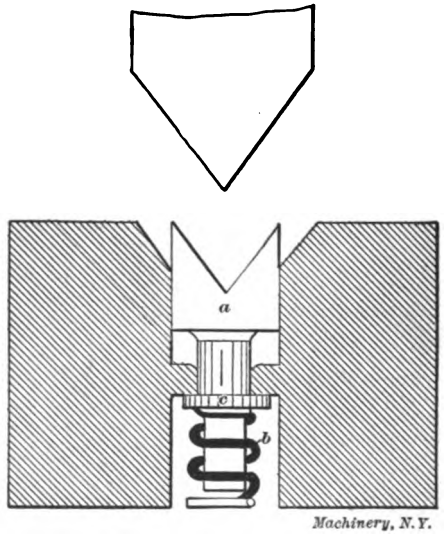

Fig. 48. Bending Die for Accurate Work

This is forced upward by the spring *b* and is gaged as to height by means of the washer *c* bearing against a shoulder, as shown. It will be observed that the spring gets its bearing against the washer, which in turn bears against the shoulder of the riser as mentioned before. When making this die, the hole is drilled and reamed and the groove milled or planed for the riser, which is put in place sufficiently tight to hold it while the V-groove is cut, after which it may be relieved until it works freely. The spring *b* gets its lower bearing on the die holder. If it is considered advisable, a screw may be provided for the spring to rest on. By adjusting this screw, any desired tension may be given the spring, although, generally speaking, this is not necessary.

When bending articles of certain shapes it is necessary to design the tools so that certain portions of the piece will be bent before other portions. Should we attempt to make the tools solid and do the work

at one stroke of the press, the piece of stock would be held rigidly at certain points and it would be necessary to stretch the stock in order to make it conform to other portions of the die. In the case of articles made from soft stock, this might be accomplished, but the stock would be thinner and narrower where it stretched. However, as a rule it is not advisable to do this, and dies are constructed to do away with this trouble.

Fig. 49 represents a die, the upper part of which has the portion *a* so constructed that it engages the stock first. After forcing it down into the impression in the lower portion, part *a* recedes into the slot

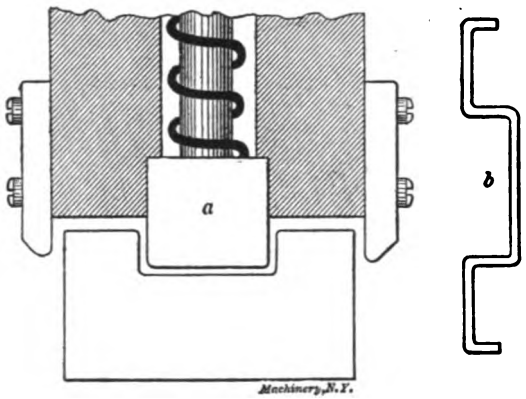

Fig. 49. An Example of Progressive Bending Die

provided for it. The coil spring shown is sufficiently strong to overcome the resistance of the stock until it strikes the bottom of the impression. The article is shown bent at *b*.

Compound Bending Dies

Compound bending dies are used very extensively on certain classes of work, especially in making looped wire connections and articles of thin sheet stock. Fig. 50 shows a die used for bending a bow spring. As the punch descends, the stock is bent down into the impression in the lower half and forms the stock to a U-shape. As the end of the punch with the stock comes in contact with the bottom of the impression it is forced into the upper portion, the spring keeping it against the stock, while movable slides—side benders—*b* are pressed in by means of the wedge-shaped pins so as to force the upper ends of the loop against the sides of the punch as shown in Fig. 51, forming the piece as at *B*. When the punch ascends, the finished loop may be drawn off. If the stock used is stiff it will be necessary to make the punch somewhat smaller than the finished size of the spring, as it will open out somewhat when the pressure is removed.

When making looped wire work, a loop may be formed and the wire moved along against a stop, another loop formed, and so on, as in Fig. 52. When forming looped wire work it is customary to make the

punch ball-shaped rather than as shown in Fig. 50. The ball answers well on wire work and allows of the easy removal of the loop. It is sometimes desirable to close the upper end of an article nearly together, and if the stock used is extremely stiff, as bow springs made from a grade of tool or spring steel, it may be necessary to heat the

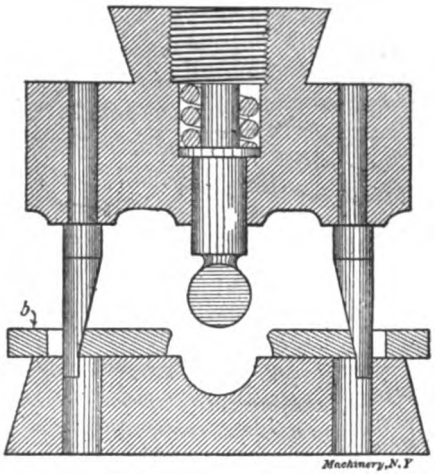

Fig. 50. Die for Bending Bow Springs

bow, which has previously been bent, red hot, and finish bend it by a special process. In the case of articles made from a mild grade of stock the whole bending process may be accomplished in one operation by substituting a mandrel, as shown in Fig. 53, for the cylindrical portion of the punch.

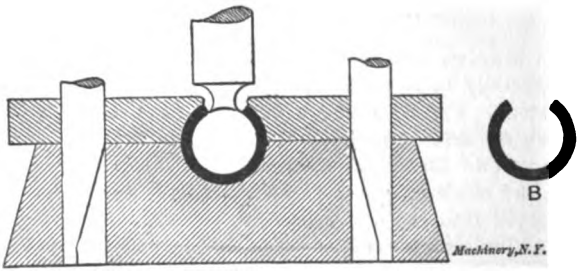

Fig. 51. Action of Die in Fig. 50

A great variety of work may be done by modifications of the methods for bending shown. Where but a *few* pieces are to be bent it is not advisable to go to the expense of costly bending dies; but when the work is done in great quantities, they will produce work uniform in shape at a low cost. Blanking and bending dies are made which not only punch the article from the commercial sheet, but bend it to the desired shape at the same operation. As a rule, it is advisable to

blank the article at one operation and bend it at another, but there are certain forms of work where it is possible to do it in a satisfactory manner at one operation and at a cost not exceeding that of the ordi-

Fig. 52. Successive Loops Formed in a Wire

nary blanking operation. This also effects a saving in the cost of tools, as the special bending die is dispensed with.

Fig. 54 represents a punch and die used in punching the shoe *a* to the proper shape shown, while Fig. 55 is one used for producing

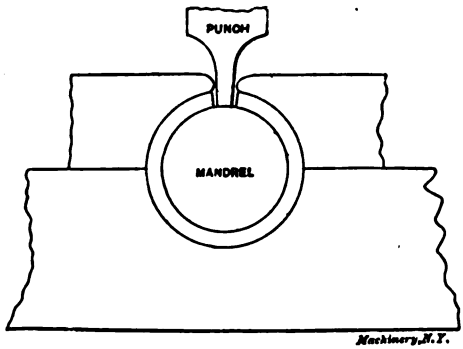

Fig. 53. Forming a Bow Spring with Ends which nearly meet

the tension washer shown. Gun and other irregular shaped springs are many times punched to form by this style of die, although, when stock suitable for use in making springs is employed, it will be found necessary to make the face of the punch somewhat different in shape from

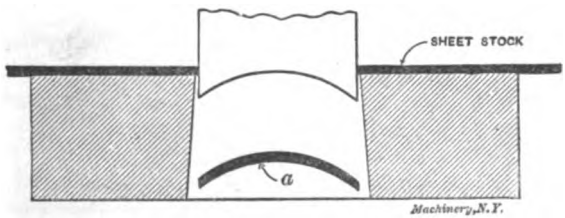

Fig. 54. Punching and Bending at One Operation

that desired, as the piece will straighten out more or less after it is punched.

If it is desired to curl a form on a piece of work, making a loop as in Fig. 56, it is accomplished by various methods, sometimes by a modification of the die in Fig. 51. A die of the description shown in Fig. 57 is used with excellent results. In making this die, the blank *a* is first machined to size. The hole *b* is drilled and reamed to size,

and polished to produce very smooth walls. This may be accomplished by using a round revolving lap of the right size. The slot is then milled as shown. If the die is not intended for permanent use and the stock is comparatively soft or easily bent, it need not be hard-

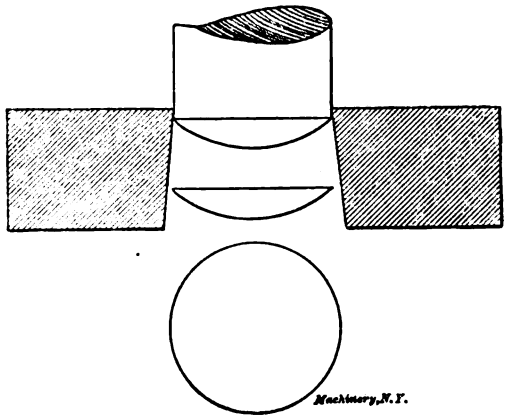

Fig. 55. Making a Tension Washer

ened. If, however, it is to be used right along, it must be hardened. This is best accomplished by pack-hardening, being sure that the heat is low. As when using this method the die is quenched in oil, there is little or no danger of its going out of shape. It is then drawn

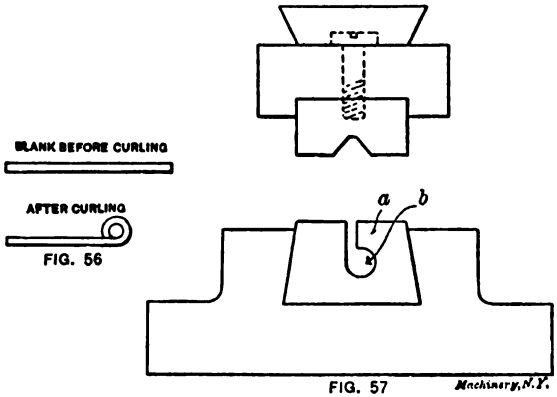

Figs. 56 and 57. A Curling Die and its Work

to a full straw color. The punch is made with a V-shaped impression in its face, as shown. This may be flat in the bottom, as indicated, or left sharp, as desired.

It is possible with presses and tools adapted to the work to form pieces to shapes that to one not familiar with this class of work would seem well-nigh impossible.

CHAPTER II

SUGGESTIONS FOR THE MAKING AND USE OF DIES

In the phenomenally rapid progress made during the last decade in the press working of sheet metals by the introduction of compound, combination, sub-press, and gang dies, automatic roller and dial feeds, the simpler operations on the power press, instead of becoming subject to similar improvement, have been sadly neglected. It is therefore not out of place to refer, shortly, to the basic elements of the art of using and making dies. Although the following discussion originally was intended to apply to one particular line of presses, the suggestions brought forward may be applied with slight modifications to any make of upright power press on the market to-day.

It is not so generally known as it should be that the inclining of a press adds materially to its productive capacity. This advantage is almost doubled when the same belt may be used in both positions, permitting the change to be readily made without undue loss of time. Many users make it a rule to incline the press on all operations except "push through" jobs, that is, on all work which does not drop through the bed of the press. It is then simply necessary to feed the work to the dies, allowing it to drop out by gravity. To permit the use of the same belt for both positions, the press should be so placed on the floor that the center of the shaft when in its inclined position is the same distance from the line shaft as it is when the press is upright.

While there are many diemakers who advocate the use of a separate cast iron bolster for each die, it is advantageous to use bolsters made of cast steel, which are largely used by Western shops. There are two made for each press, one for cutting dies and one for bending and forming dies, the construction of compound and combination dies remaining unchanged. By this system the separate dies are interchangeable on any press; they occupy less space on the shelves of the tool-room, and inasmuch as all strippers and gages are fastened directly to the die instead of to the bolster, they never become lost when changing from one job to another. The desirability of using standard hexagon head cap screws to hold down strippers, gages, etc., should be impressed upon diemakers. The strippers on any die may then be removed to facilitate correct setting of the die, and then replaced in position—something impossible on slotted head screws except by using an angle screw-driver.

There is little room for improvement in the cast iron punch-holder. One might suggest, however, the use of solid piercing punches in place of the drill-rod surrounded by a soft steel sleeve riveted to a punch-pad. Wherever possible, it is advisable to do away with the old-fashioned soft steel punch sleeve, and to let the punches into their holders

either by turning a round shank on them, or dove-tailing them into the cast iron holder in the same manner as the die.

In planing up the die-blank it is well to remember to take a very slight cut from the bottom and a cut about twice as deep from the top.

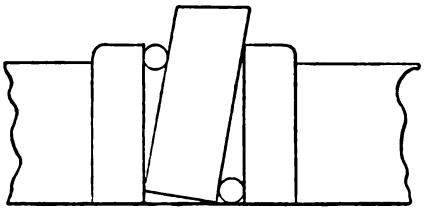

Fig. 58

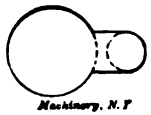

Fig. 59

This removes the decarbonized surface from the cutting face where it needs most to be done, but leaves it on the bottom where the die may remain soft. Where there is a scarcity of 10-degree parallels, two pieces of drill-rod between the jaws of the vise may be arranged to

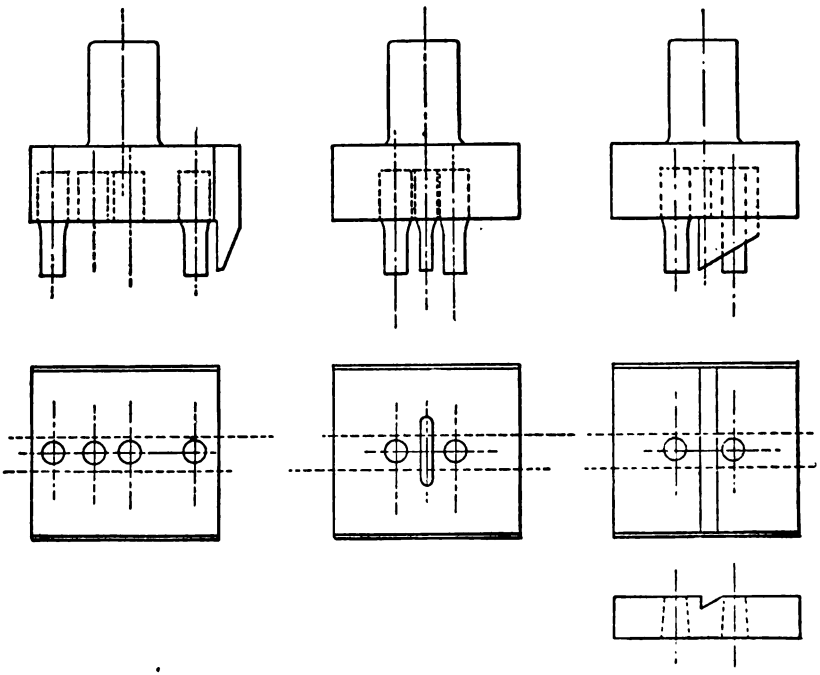

Fig. 60 Fig. 61 Fig. 62

Steps in the Evolution of Press Tools for Copper Connectors shown in Fig. 65

give the correct angle, as shown in Fig. 58. Quarter-inch drill-rod is the size to use when the jaws are 1 9/16 inch high. Where intricate shapes must be drilled out with small drills, the holes may be laid out a trifle close together, and the shank of an old drill of the same size

pushed into the first hole drilled. This will prevent the drill from running too far into the previously drilled hole, and by proceeding in this manner all around the outline, the core to be removed will drop out without the use of chisel or drift. The amount of draft on some blanking dies which are combinations of drilled holes, as, for instance, the shape in Fig. 59, may be infallibly obtained by reaming these holes from the back of the die as though they were simple piercing dies. Where extreme accuracy is essential, or a die is too large to be made of a single forging, the use of sectional dies becomes imperative. While the first cost of a well-made die of this kind is higher than that of a solid die, still the ease of repair and uniformity of production of this type of die make it advantageous in the long run.

The dies shown in the illustrations serve to emphasize the main features of this discussion. Fig. 60 shows a die as originally made for the three copper connectors shown in Fig. 65. It is a plain cutting-off die, having the different holes placed in the die at the proper center distances apart. By means of a suitable adjustable gage and by placing one of the piercing punches in its proper position in the punch-holder, the three different sizes of connectors shown in Fig. 65

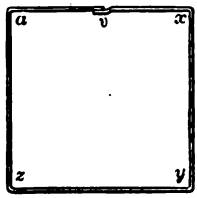

Fig. 63

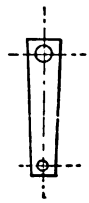

Fig. 64

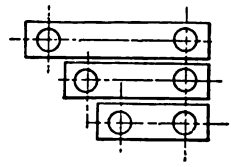

Fig. 65

may be produced. However, during the process of improvement of the device on which these connectors were used, it became necessary to change the center distances between the holes and also to produce three longer ones. The die shown in Fig. 61 was at first considered adequate, but, on account of the quantity required, the scrap produced by the cutting punch was considered objectionable. Leaving the piercing punches in the same position, the shape of the cutting-off punch was changed, as shown in Fig. 62, and a corresponding V-groove planed in the die. In connection with stripper and gage (not shown) this die allows the production of an indefinite number of connectors of different center distances.

The die shown in Fig. 66 impresses the fact that the slitting shear is a valuable auxiliary to any press. The metal for the production of the copper segment ⅛ inch thick, shown in Fig. 64, ordinarily would be cut a little wider than the length of the blank so as to allow the punch to cut all around. But in all cases where at least two sides of a blank are parallel, the stock may be cut the exact width of the parallel portion of the blank in the slitting shear, and then the pieces may be punched and cut off two at each stroke of the press, as shown in the die in Fig. 67. There is one inherent drawback to this form of die,

and that is the tendency of the punch to lift up the end blank while cutting it off and produce a badly beveled edge. But if this portion of the strip is securely held down by the clamping device on the die as shown, the punch will have the same effect on both sides of the blank, cutting it off squarely. The gage and stripper held down by the cap-screws can be made a better fit on the stock than ordinarily, because it is not necessary to lift it up past a stop pin fastened to the die to enable the operator to feed the strip. By inclining the press, allowing one blank to slide out when released by the clamp, and letting the punched one drop through, two complete blanks are produced at each stroke of the press, with almost no scrap.

The extension punch and die in Fig. 67 is quite useful on work which is commonly beyond the scope of the press, such as the sheet

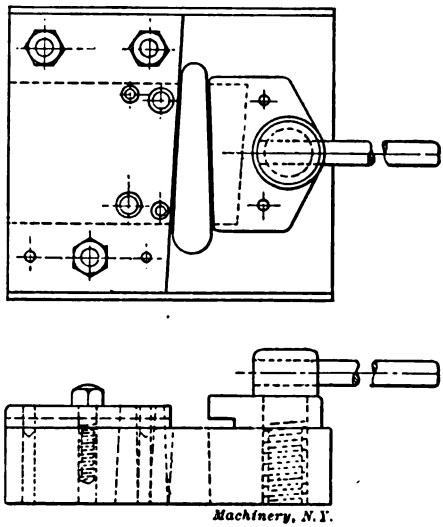

Fig. 66. Die for Punching without Waste the Pieces shown in Fig. 64

iron box shown in Fig. 63. This forms the sides of a slate-bottomed switch cabinet used on the old Manhattan Railway cars when they were equipped with electricity. The operations on this box included the bending of the 2 by ⅛-inch strap iron in four places, forming the lap joint, and riveting same. The cut shows the punch and die (without necessary stops and gages) in position for bending the corners. The front clamping plate is removed from the ram and a cast steel extension bolted in its place with the same bolts. The large hook bolt extending into the hole in the ram and drawn up by the nut outside, is required to support the extension during the strain of bending. To allow the stock to clear the front of the press when bent into shape, the distance *A* in Fig. 67 should be a little more than half the width of the strap iron to be bent, and to avoid fouling the flywheel, corner *x* in Fig. 63 should be the first one bent after the lap

has been formed, and then, in rotation, corners *y*, *z* and *a*. When running the press at its accustomed speed on this job the ends of the bent piece moved rather too fast for comfort, and it was therefore necessary to cut down the speed of the flywheel by inserting resistance in the armature circuit of the motor which drove the line shaft to which three of these presses were belted.*

Method of Locating Stock in Dies

When a job will not warrant the expense of a sub-die, the device shown in Fig. 68 will help wonderfully toward producing accurate punchings. To simplify the explanation, the die shown is to cut washers, the holes being eccentric with the outside. The die is laid out the same as any double die, but the stop pin *G* is added, and as will be noted, the extension *K* does not come out of the die. If, however,

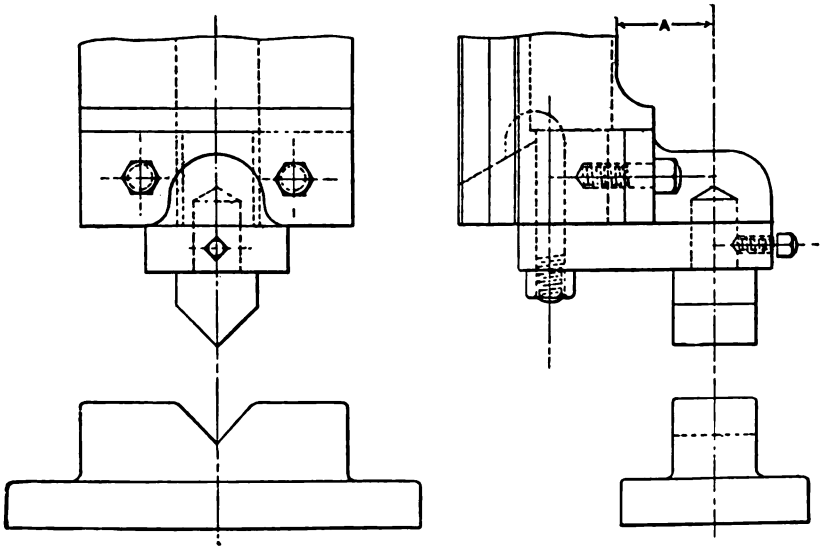

Fig. 67. Die for Corner of Sheet Iron Box

one depends entirely on this stop pin, the result will not be satisfactory, because, when the stock is pulled against the stop pin, the web between the blanked places will bend a trifle, especially if the stock is thin. Therefore the long pins *H* are added, and as these long pilots or traveling dowels are well pointed, and are considerably longer than the punches, they of course enter the holes and force the stock back to its proper location. The pilots fit two holes in the die, and they therefore act as dowels while the punch is cutting. The pilots and the spring butts *L* keep the stock pressed firmly against the gage side of the stripper, and the stock can vary 1/16 inch. With this construction the operator is enabled to keep the press running constantly to the end of the strip. At each stroke the punch *G* cuts out the web and allows

* H. J. Bachmann, July, 1906.

the stock to slide along to the next web, and there is absolutely no possibility of the stock jumping the stop.

As washer or small wheel dies are generally made to cut four or more blanks at one stroke, the following method of transferring the holes to stripper and punch-holder will be of benefit to some mechanics. If the punches are small, it is advisable to make the stripper, say, ½ inch thick, and dowel it with four good-sized pins to the die. The holes through the stripper are bored to fit the punches nicely. This will act as a guide and prevents the punches from shearing. When the stripper is doweled to the die, we lay out the former with buttons or by other methods governed by the accuracy demanded, and each hole in

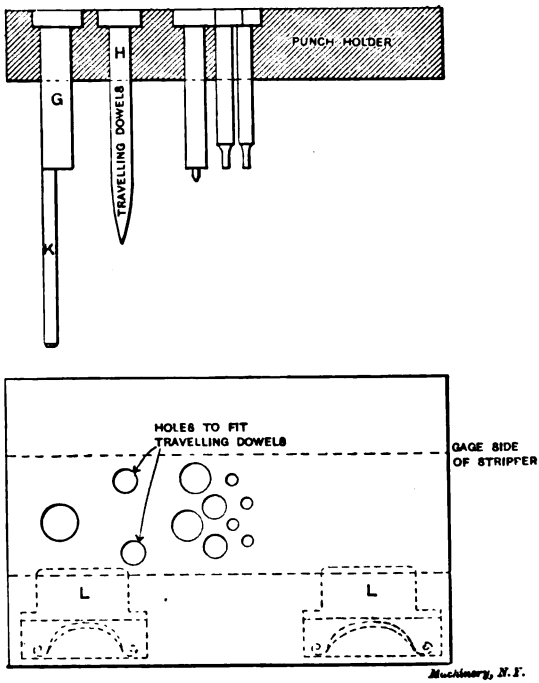

Fig. 68. Punch and Die with Guide Pins

turn is indicated and bored through the stripper and die. If the holes are so small that they will not readily admit boring to such length, the stripper may be bored and removed and the die then bored. The die must, of course, be fastened in such a manner that the stripper can be removed without loosening the die. If properly doweled, the punch-holder, stripper and die can be bored together, thus insuring perfect alignment of the punches and the die.

Making an Irregular-shaped Die

Fig. 69 shows a time-saver, as the die can be made easier and better because the parts can be ground to size instead of the die being filed

out. Another advantage is that if the pieces warp in hardening they can be ground into shape again. The pieces *M* are shrunk on the sections, holding them securely together. The holes *N* are drilled for clearance for the emery-wheel when grinding to size. The straps *M* are made a trifle shorter than the die over all, say 1/16 inch to the foot, and are heated red hot in the middle and placed in position while hot, and rapidly chilled. After these pieces are shrunk on, the dowels are transferred into the bolster.

Another good kink when making irregular-shaped punches that are to cut thin stock is to make them of machine steel and case-harden them. Soft steel, case-hardened, does not change its form as much as

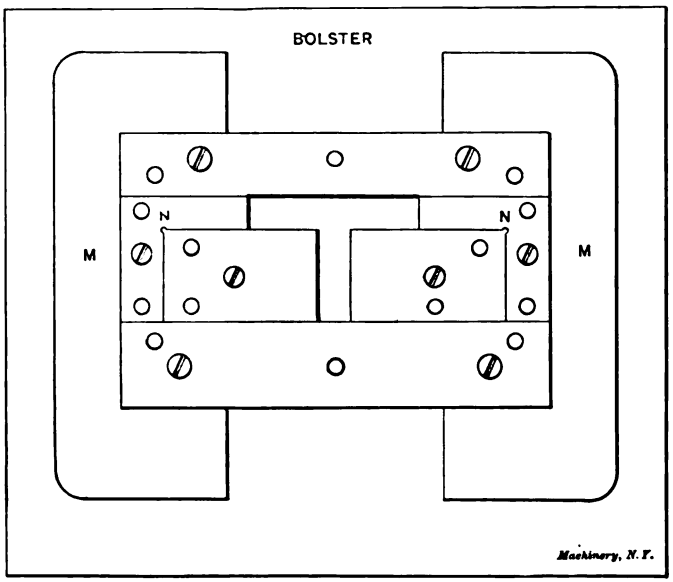

Fig. 69. Example of Built-up Die

tool steel, and even if the punch does change a trifle, the interior is soft and can be readily forced back to position. The outside being hard, the punch will wear nearly as long as one made from tool steel, for practically the only wear on a punch is when passing through the stock. For thin brass the punch works well when made of tool steel and left soft, and when worn badly the punch can be peened on the face enough to upset, and then sheared into the die. When cutting a heavy blank, it is a good plan to grind the die so that the surface is quite rough, as the high spots then cut a trifle ahead of the low points. This will cause the die to run longer between grindings and is also easier on the press, while with a die that is ground perfectly smooth the entire cutting surfaces of punch and die meet simultaneously and the entire cutting surface of punch and die are placed under a tremendous strain. By grinding the die slightly lower on each end, thus producing a shearing cut, the die will last longer.

A Kink in Hardening

What will greatly reduce the chances of springing in hardening of an irregularly shaped punch or die is to thoroughly anneal it after it has been machined nearly to size. This will, of course, not entirely remove chances of accidents, as the prime cause of cracks and distortion of work is to be found in the operator's way of handling the piece to be hardened. An illustration of what takes place when hardening may be given by referring to the die shown in Fig. 70. If we place the die in the fire, the points *C* will heat and expand quicker than the main body of the die, and there must be a sort of a "pushing" effect between the points *C* and the main body of the die. For this reason we heat "slowly and evenly." Now, when we dip the die in the bath, the points *C* immediately become chilled, and, of course, contract while the main body is still red hot. Assuming that the points have become entirely cooled, there must be a line that separates the part

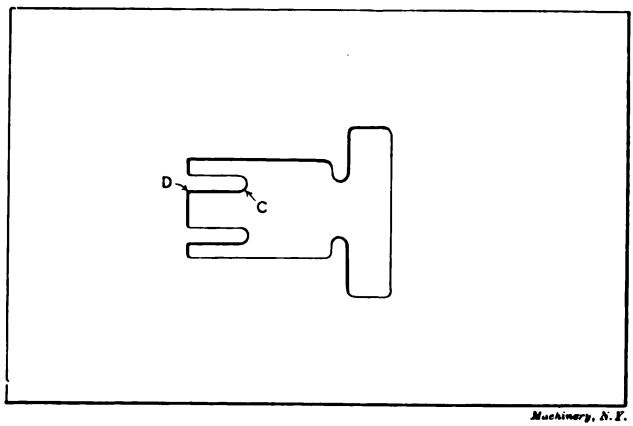

Fig. 70. Die of Irregular Shape Subjected to Heavy Strains in Hardening

that has been cooled off from the red-hot part. It must follow that when the main body begins to contract there is a powerful strain at the line that separates the parts contracting at different times. For this reason the die should be removed when quite warm; this allows the heat to run out into the points and the contraction will be more even. If allowed to cool in the bath there is apt to be a crack at *D*. Polish the die to draw the temper, and do not depend on getting an even temper by drawing the die when it is dirty, as one part may draw faster than another.

Doweling Hardened Parts

When making pieces such as sections of a built-up die, or any piece having dowel holes, it invariably happens that the dowel holes do not line up after hardening. One way to overcome this trouble is to tap the dowel holes a trifle larger than the dowels to be used, and after the piece is hardened, screw in soft plugs and file them off flush with

the work; when the piece is screwed in its proper place, the dowel holes are drilled and reamed through the soft screw bushings. This will save a great deal of unsatisfactory lapping.*

Construction of Dies to Prevent Breakage in Hardening

Another method of preventing breakage in hardening of dies with small projecting tongues, as shown in Fig. 70, is to construct the die in the manner outlined below. The die is first filed or machined in the regular way, with the exception that the two tongues are left out. In line with the center of the tongues and at a certain distance from the cutting edge, holes are drilled larger than the width of the tongues. These are taper reamed from the top with a standard taper reamer. A slot is then cut from the holes into the die the same size as the

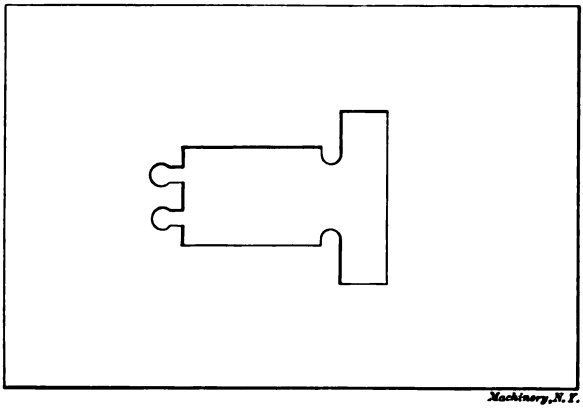

Fig. 71. Method of Making Dies to Prevent Breakage in Hardening

tongue, when the die would look as shown in Fig. 71. We now make two pieces to fit in the holes, and extend out the required distance, making sure that they will be a drive fit after hardening. It is best if the pieces are 1/32 inch longer than the thickness of the die, so that they can be ground flush after being driven into place. While this may increase the cost of producing the die, yet, if from any accident one or both tongues should be broken, they are easily replaced without the necessity of annealing the die.**

Fig. 72 shows a very good method of making a die that is to contain a number of identically shaped teeth or points, such as dies for gear blanks, etc. While not being the most accurate method known, it is considered that for all work intrusted to a punch and die the method illustrated will be sufficiently accurate. A set of broaches are made, as shown in the cut, the number of steps being governed entirely by the length, or depth, of the teeth. The pilot fits the hole in the die, which is the diameter at the top of the teeth, and each step on the broach is 0.002 inch larger than the preceding step. The broaches

* F. E. Shailor, March, 1907.
** K. L. Ross, September, 1907.

are made on centers and necked in at *Q* to allow clearance for the chips. With a cutter of the proper shape the teeth are then milled on the broaches, using the dividing head on the miller. After cutting the teeth on all of the broaches, the teeth on the punch should be cut

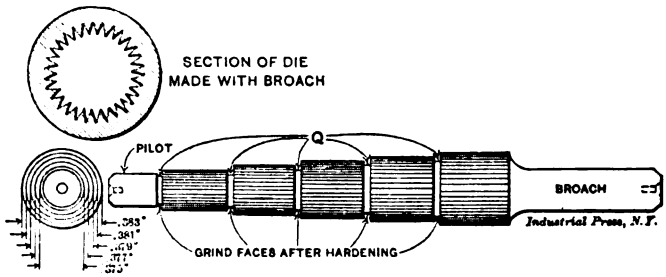

Fig. 72. Broach for making Dies for Gear Blanks, etc.

at the same setting. The broach is then hardened and ground on the faces as indicated. When used, each successive step is driven through the die until the last step is reached, and this should be driven through as many times as there are teeth in the broach, turning it one tooth each time. By doing this, whatever error may have been caused by hardening is overcome.*

* F. E. Shailor, January, 1904.

CHAPTER III

EXAMPLES OF DIES AND PUNCHES*

In the following are given a few examples of the design and construction of dies and punches, selected because they are very interesting and ingenious in their action. The die in Fig. 73 was designed by Mr. Thomas Gierding, of the New Haven Clock Company. This die performs five distinct operations before the piece shown in the upper left-hand corner of Fig. 73 is dropped completed from the press.

In constructing this die it was not deemed practicable to make it of one solid piece, since one small flaw would, in this case, spoil the entire die. A die block of machine steel was therefore used, having recesses counterbored for the insertion of tool steel bushings. These recesses were accurately spaced by the method illustrated in Fig. 74. One side and one end of the die block were machined perfectly square, and a center line drawn lengthwise on the face of the block. The location of the recesses was approximately laid out with lead pencil and the recess *A* bored in the lathe, by strapping the block to the faceplate. Before loosening the straps by which the block was held, the parallels, *B* and *C*, bearing against the finished edges of the block, were strapped to the faceplate. The straps holding the block were then loosened and the block moved along the strip *C* sufficiently to allow for the insertion of the spacing block, *D*, which had previously been made of the required size. The die block was then fastened and the hole *E* recessed. By repeating this operation, and adding a block each time until all of the recesses were bored, it was possible to space the die far more accurately than would have been possible by the time-honored method of laying it out with dividers. The punch-holder and the stripper were then bored in the same manner, using the same spacing blocks.

The bushings *F*, *G*, *H*, *I*, *J*, *K*, were next made, and after being hardened they were lapped to size. The outside of the bushings was ground concentric with the hole by wringing the bushing on a piece of soft steel held in the chuck and turned to fit the hole in the bushing. The bushings were then forced in the die block and the die was completed. The punches were ground all over, to insure straightness, and they, in turn, were forced into the punch-holder. The drawing and forming punches *L* and *M* were held with setscrews to prevent them from being pulled out.

In using a die containing two or more punches, considerable trouble is sometimes experienced on account of the variation in width of the stock to be punched. Should the stripper be planed to fit one of the strips of stock very nicely, the chances are that the next strip would not enter the stripper at all. The part, *N*, shown in the plan of the

* MACHINERY, January and August, 1904.

die, is a novel and practical way in which this trouble is overcome. The stripper is planed out 1/16 inch wider than the stock and recessed to allow the spring guide *N* to slide freely when the stripper is in

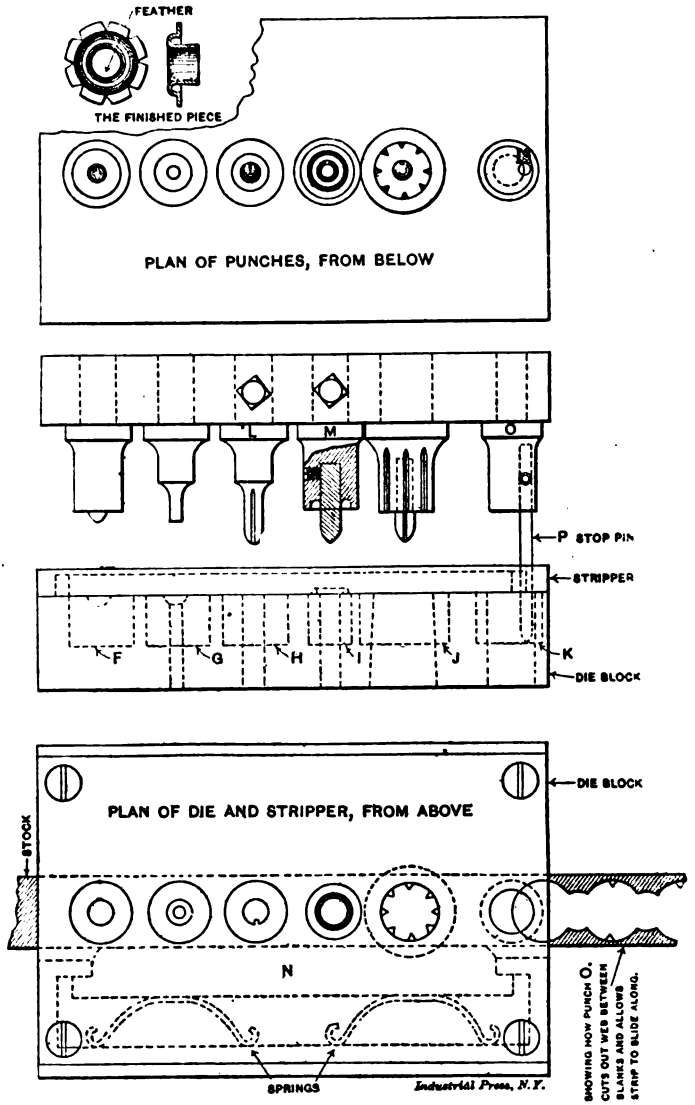

Fig. 73. Punch and Die for Performing Five Distinct Operations

position in the die. By glancing at the sketch the reader can readily see how the springs keep the stock pressing against the gage side of the stripper. The punch *O* does not perform any work pertaining to

the finished blank, but is used for cutting out the web in the stock in order to allow the strip to move along until the next web touches the stop pin. As the stop pin *P* does not come out of the stock it is therefore impossible to "jump" the stock and make a miscut, which would mean disaster to the drawing and forming punches.

After setting up the die in the press, the punches of course descend five times before a single finished piece appears, but thereafter a finished piece drops at each stroke of the press. The first punch, beginning at the left, indents the stock, and the punch is so adjusted that the face of the punch levels the stock. The second punch pierces the bottom of the indentation. The next punch draws the stock, and at the same time, forms the feather shown in the finished piece. The fourth is the forming punch and the last punch does the blanking.

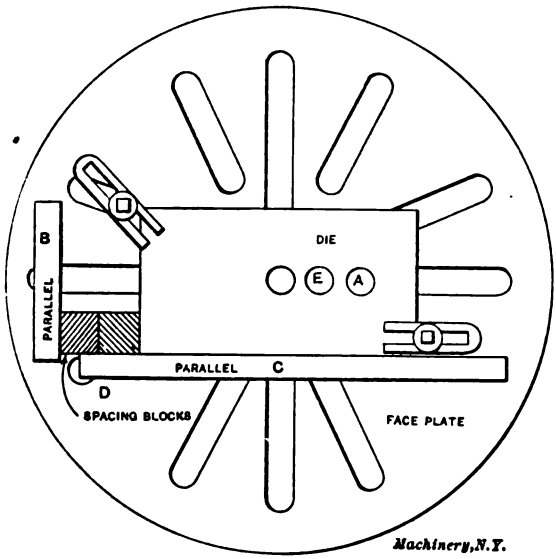

Fig. 74. Spacing the Holes in the Die in Fig. 73

Another interesting die is shown in Fig. 75. This die contains several novel features that will be found valuable to many engaged in die-making. As the sub-press die, the frames, and the power presses are of standard dimensions, it too frequently occurs that a die of a certain size requires specially made frames, and possibly a specially made press. The cut, Fig. 75, shows a practical way to construct a die that not only is a compact self-contained die, but that can be fitted to any style of press (of sufficient strength), having any length of stroke.

This particular die was designed to produce the disk shown at *A*, Fig. 76, and previous to its introduction the disks were blanked out with a plain open die and then leveled by hand. The disks are of aluminum, 99 per cent pure, and, therefore, very soft, and as it is very essential that they should run as true as possible, great difficulty was

experienced in leveling them. The corrugating mats *B B* were designed to level the disk and also to set, or stiffen the metal, and they proved a success, for when the disks leave the die they are as nearly level and true as is possible to make, and so stiff that they can be handled quite roughly without injury. The disk was not corrugated its entire surface owing to the fact that the mat would be obliged to act as the blanking punch, and if the corrugations extended clear to the edge of the mat, it could not be sharpened when dull. Therefore the rings *C D* were introduced. The ring *C* acts as the blanking punch, and ring *D* acts as a leveling ring. The die is guided by means of two guide or pilot pins, *E E*, Fig. 76, and as the gate of the press descends, the rings *C D* are the first to act on the stock to be punched, gripping it from above and below and holding the stock securely. Then, as the press continues downward, the rings settle back, still holding the stock, and the mats *B B* grip the blank.

The rubber spring, which is one of the features of the design, exerts an increasing pressure on the metal, pressing it into the corrugations

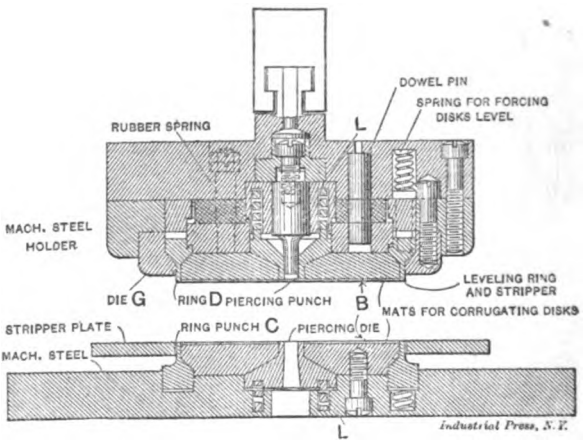

Fig. 75. Vertical Section through Sub-press Die shown in Fig. 76

on the mats. The press is so adjusted that the ring *C*, which is the blanking punch, comes exactly flush with the die *G*, but does not enter. On the upward stroke of the press, the springs and rubber plate force the moving parts back to their original position, and force the disk out of the die, and the surplus stock off the ring *C*. The rubber plate can be advantageously used in a small place where a very strong spring is required. The tension or spring effect is obtained by cutting holes *H* in the plate, Fig. 77. The more holes there are in the plate, the weaker the tension, as the holes permit the surrounding rubber to squeeze into them. On the other hand if no holes were cut in the rubber plate, and the same fitted the recess in the die bored for it, there would be no more spring effect than if a metal plate were used. Rubber does not compress, but merely changes shape. Another novel feature is

that the guide pins are automatically lubricated at each stroke of the press. The pins run in the babbitt boxes *I I*, Fig. 76, which have four grooves, *J*, cut the entire length of the babbitt and an oil chamber or reservoir *K* recessed near the top. A quantity of oil is placed in the bottom of the box and as the pins descend they force the oil up through the grooves, *J*, into the reservoir, and as the pins ascend they form a partial vacuum at the bottom of the box, which sucks the oil back to the bottom.

Space will not allow describing the methods employed when making each part of the die, but it will suffice to say that with the exception

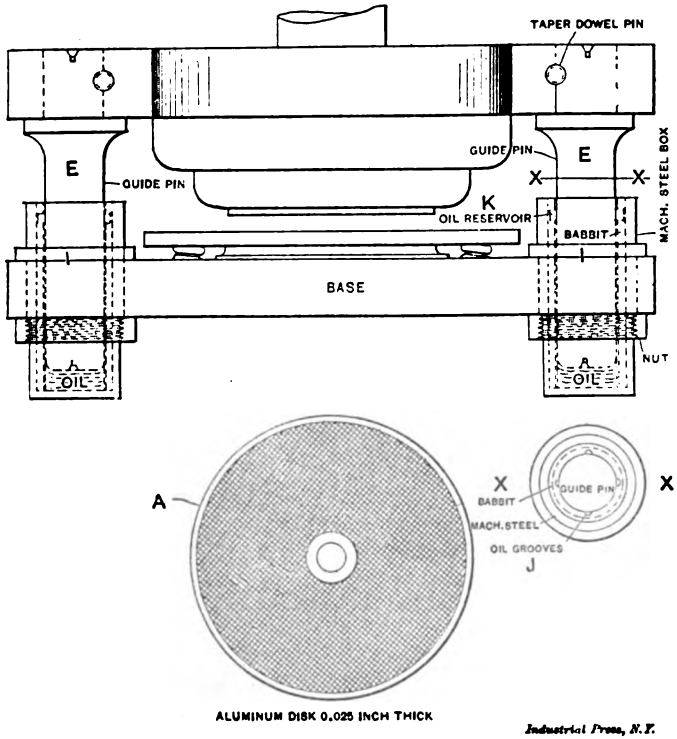

Industrial Press, N.Y.

Fig. 76. Side Elevation of Die shown in Section in Fig. 75, and Sample of Work

of the mats, screws and holder, the parts were hardened and accurately ground, making a smoothly running die. It might be well, however, to mention the method employed in making the square springs *L*.

It is well known what a difficult job it is to wind a heavy coil spring and have it a given diameter on the inside and outside, when finished. A large spring is generally made by heating wire red hot, and winding as many coils as possible before cooling, then reheating and winding more coils. The springs *L L* were made by gripping a piece of round

tool steel in the lathe chuck, turning it to the given outside diameter. The lathe was then geared to cut a coarse pitch thread and with a square thread tool, the thread was cut sufficiently deep. The inside of the spring-to-be was then bored out to the proper diameter, leaving a spring the coils of which were evenly spaced, thereby causing each coil to perform equally its share of the work. With a wound spring the coils are very seldom equally spaced, and when under pressure there is a greater strain on the coils furthest apart, causing the spring to either "set" or break at that point.

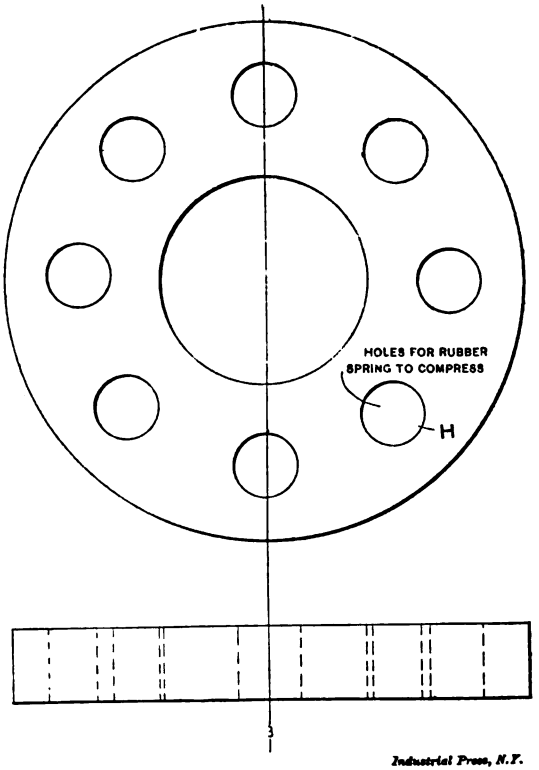

Fig. 77. Spring Rubber Plate

After all parts of the die were completed, the die was assembled, leaving out the springs. The upper and lower parts were then brought together until the punches entered the dies, care being exercised that the upper and lower parts of the die were perfectly parallel with each other. The boxes *I I* were then babbitted, first treating the guide pins with a light coating of flake graphite and oil to prevent the babbitt sticking to the pins. The writer considers that a large die of the above description is far superior to the ordinary sub-press die, inasmuch as it

is more compact, and also does away entirely with the cumbersome cast iron frame.

Fig. 78 shows a die that is designed to take the place of the plain, open, double die. The ordinary double die is made with the stripper fastened to the die and planed out to allow the stock to slide through. The unsatisfactory results obtained when using a die of this style are well known. The greatest fault is that no two blanks are exactly alike, owing to the fact that the stock is wrinkled and does not lie level on the die. As the punches descend, they pierce the stock without leveling same, and as the blanks are afterward leveled, it is found that the pierced holes, being unevenly spaced, will not allow the blanks to interchange. By making the die, as shown in Fig. 78, with the stripper plate *M* fastened to the punch-holder and with a stiff coil spring at each corner, and so adjusted that the punches do not come

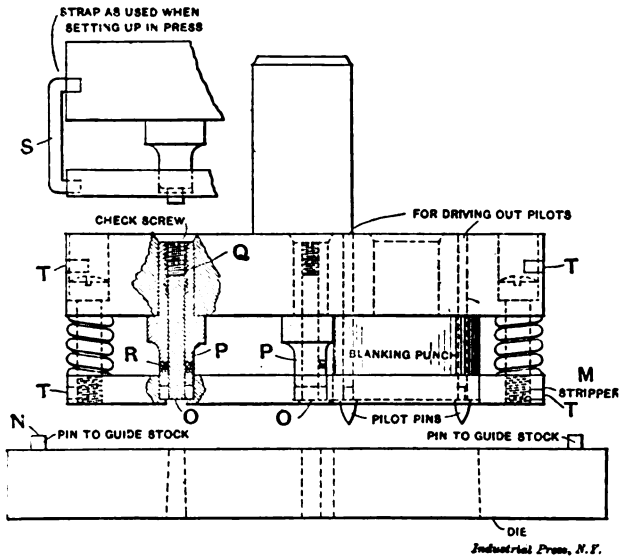

Fig. 78. Die with Stripper Attached to Punch to Flatten Stock

quite flush with the face of the stripper, the above-mentioned trouble is nearly eliminated. On the downward stroke of the press the stripper *M* presses the stock firmly against the die, holding it level while the punches perform their work. The stock is guided by means of a small pin *N* at each end of the die. The stripper should not fit the punches; for if the operator should make a miscut, or should a piece of scrap punching get under the stripper, it would cause it to tilt and bring disaster to the small punches.

Another valuable feature in this die is the manner in which the piercing punches *O O* are constructed. Ordinarily piercing punches are made solid, and if one breaks, it necessitates making a whole new punch or grinding the other punches down to the same length, greatly

shortening the life of the die. The punches shown at *O O* are designed to overcome this trouble. A holder *P* is made and left soft, into which the punch (or rod) *O* is inserted, being backed up by the screw *Q* and prevented from pulling out by means of the screws *R*. Then, should one of the punches "flake" off, that same punch can be ground and then forced out by means of the screw *Q* until it is at the same height as the others. This style of piercing punch greatly increases the life of a die. This die can be made either with or without the guide pins *E E* in Fig. 76. If made without the guide pins it is necessary to use the straps *S* to allow aligning the punches with the die when "setting up" in the press. The stripper is forced back and the straps inserted in the holes *T T*. After the die is "set up" and securely fastened, the straps are removed.

All presses in which double dies are used should be provided with a separator, which is a piece of sheet metal fastened underneath the press to separate the scrap punchings from the blanks. It is frequently

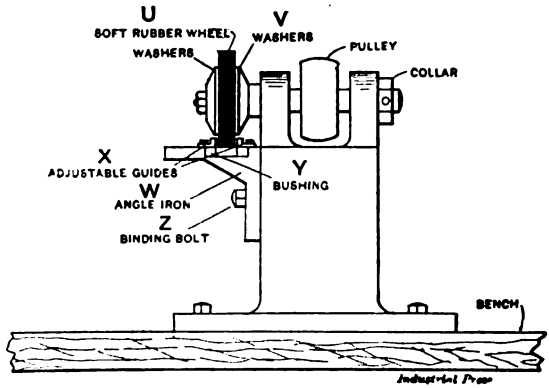

Fig. 79. Machine for Separating Blanks from Stock Strips

noticed that in factories where no separator is used, the cost of sorting the blanks from the scrap is in excess of the cost of blanking. A sub-press die leaves the blanks in a strip of stock. If the stock is over 0.02 inch thick, considerable trouble is experienced in removing the blanks. Fig. 79 shows a means whereby the blanks are forced from the strip without marring them. *U* represents a soft rubber wheel, which is supported on the sides nearly to the edge by the washers *V*. The angle iron *W* is provided with adjustable guides *X* and is recessed at *Y* to receive bushings having different sized holes. A bushing is inserted in the angle iron having a hole somewhat larger than the blanks to be forced out. The guides *X* are then adjusted to allow the strip to slide freely. The angle iron is then raised by loosening the bolt *Z* until sufficient pressure is brought on the rubber wheel. The wheel being power driven, all that is necessary is to place the end of a strip under the rubber wheel and it will roll the strip along, at the same time forcing out the blanks.

No. 39. Fans, Ventilation and Heating.—Fans; Heaters; Shop Heating.

No. 40. Fly-Wheels.—Their Purpose, Calculation and Design.

No. 41. Jigs and Fixtures, Part I.—Principles of Jig and Fixture Design; Drill and Boring Jig Bushings; Locating Points; Clamping Devices.

No. 42. Jigs and Fixtures, Part II.—Open and Closed Drill Jigs.

No. 43. Jigs and Fixtures, Part III.—Boring and Milling Fixtures.

No. 44. Machine Blacksmithing.—Systems, Tools and Machines used.

No. 45. Drop Forging.—Lay-out of Plant; Methods of Drop Forging; Dies.

No. 46. Hardening and Tempering.—Hardening Plants; Treating High-Speed Steel; Hardening Gages; Hardening Kinks.

No. 47. Electric Overhead Cranes.—Design and Calculation.

No. 48. Files and Filing.—Types of Files; Using and Making Files.

No. 49. Girders for Electric Overhead Cranes.

No. 50. Principles and Practice of Assembling Machine Tools, Part I.

No. 51. Principles and Practice of Assembling Machine Tools, Part II.

No. 52. Advanced Shop Arithmetic for the Machinist.

No. 53. Use of Logarithms and Logarithmic Tables.

No. 54. Solution of Triangles, Part I.—Methods, Rules and Examples.

No. 55. Solution of Triangles, Part II.—Tables of Natural Functions.

No. 56. Ball Bearings.—Principles of Design and Construction.

No. 57. Metal Spinning.—Machines, Tools and Methods Used.

No. 58. Helical and Elliptic Springs.—Calculation and Design.

No. 59. Machines, Tools and Methods of Automobile Manufacture.

No. 60. Construction and Manufacture of Automobiles.

No. 61. Blacksmith Shop Practice.—Model Blacksmith Shop; Welding; Forging of Hooks and Chains; Miscellaneous Appliances and Methods.

No. 62. Hardness and Durability Testing of Metals.

No. 63. Heat Treatment of Steel.—Hardening, Tempering and Case-Hardening.

No. 64. Gage Making and Lapping.

No. 65. Formulas and Constants for Gas Engine Design.

MACHINERY'S DATA SHEET SERIES

MACHINERY'S Data Sheet Books include the well-known series of Data Sheets originated by MACHINERY, and issued monthly as supplements to the publication; of these Data Sheets over 500 have been published, and 6,000,000 copies sold. Revised and greatly amplified, they are now presented in book form, kindred subjects being grouped together. The purchaser may secure either the books on those subjects in which he is specially interested, or, if he pleases, the whole set at one time. The price is 25 cents a book.

The reliability of MACHINERY'S Data Sheets has been fully established by years and years of actual use in machine-building plants and drafting-rooms everywhere. The number of corrections it was found necessary to make in the old Data Sheets during the thorough editorial revision preceding publication in book form was relatively insignificant; but the value of the original Data Sheets has been greatly enhanced by the additional new material, never before published, by the careful arrangement and grouping together of kindred subjects, and by the helpful explanatory notes. It is the aim of the publishers to make these books absolutely authentic as reference books, notwithstanding the low price at which they are sold.

In combination with MACHINERY'S Reference Series these Data Sheet Books offer draftsmen, mechanical engineers and machinists an unusual opportunity to secure a complete working library of indispensable material.

CONTENTS OF DATA SHEET BOOKS

No. 1. Screw Threads.—United States, Whitworth, Sharp V- and British Association Standard Threads; Briggs Pipe Thread; Oil Well Casing Gages; Fire Hose Connections; Acme Thread; Worm Threads; Metric Threads; Machine, Wood, and Lag Screw Threads; Carriage Bolt Threads, etc.

No. 2. Screws, Bolts and Nuts.—Fillister-head, Square-head, Headless, Collar-head and Hexagon-head Screws; Standard and Special Nuts; T-nuts, T-bolts and Washers; Thumb Screws and Nuts; A. L. A. M. Standard Screws and Nuts; Machine Screw Heads; Wood Screws; Tap Drills; Lock Nuts; Eye-bolts, etc.

No. 3. Taps and Dies.—Hand, Machine, Tapper and Machine Screw Taps; Taper Die Taps; Sellers Hobs; Screw Machine Taps; Straight and Taper Boiler Taps; Stay-bolt, Washout, and Patch-bolt Taps; Pipe Taps and Hobs; Solid Square, Round Adjustable and Spring Screw Threading Dies.

(See back cover for additional titles)

No. 4. Reamers, Sockets, Drills and Milling Cutters.—Hand Reamers; Shell Reamers and Arbors; Pipe Reamers; Taper Pins and Reamers; Brown & Sharpe, Morse and Jarno Taper Sockets and Reamers; Drills; Wire Gages; Milling Cutters; Setting Angles for Milling Teeth in End Mills and Angular Cutters, etc.

No. 5. Spur Gearing.—Diametral and Circular Pitch; Dimensions of Spur Gears; Tables of Pitch Diameters; Odontograph Tables; Rolling Mill Gearing; Strength of Spur Gears; Horsepower Transmitted by Cast-iron and Rawhide Pinions; Design of Spur Gears; Weight of Cast-iron Gears; Epicyclic Gearing.

No. 6. Bevel, Spiral and Worm Gearing.—Rules and Formulas for Bevel Gears; Strength of Bevel Gears; Design of Bevel Gears; Rules and Formulas for Spiral Gearing; Tables Facilitating Calculations; Diagram for Cutters for Spiral Gears; Rules and Formulas for Worm Gearing, etc.

No. 7. Shafting, Keys and Keyways.—Horsepower of Shafting; Diagrams and Tables for the Strength of Shafting; Forcing, Driving, Shrinking and Running Fits; Woodruff Keys; United States Navy Standard Keys; Gib Keys; Milling Keyways; Duplex Keys.

No. 8. Bearings, Couplings, Clutches, Crane Chain and Hooks.—Pillow Blocks; Babbitted Bearings; Ball and Roller Bearings; Clamp Couplings; Plate Couplings; Flange Couplings; Tooth Clutches; Crab Couplings; Cone Clutches; Universal Joints; Crane Chain; Chain Friction; Crane Hooks; Drum Scores.

No. 9. Springs, Slides and Machine Details.—Formulas and Tables for Spring Calculations; Machine Slides; Machine Handles and Levers; Collars; Hand Wheels; Pins and Cotters; Turn-buckles, etc.

No. 10. Motor Drive, Speeds and Feeds, Taper Turning, and Boring Bars.—Power required for Machine Tools; Cutting Speeds and Feeds for Carbon and High-speed Steel; Screw Machine Speeds and Feeds; Heat Treatment of High-speed Steel Tools; Taper Turning; Change Gearing for the Lathe; Boring Bars and Tools, etc.

No. 11. Milling Machine Indexing, Clamping Devices and Planer Jacks.—Tables for Milling Machine Indexing; Change Gears for Milling Spirals; Angles for setting Indexing Head when Milling Clutches; Jig Clamping Devices; Straps and Clamps; Planer Jacks.

No. 12. Pipe and Pipe Fittings.—Pipe Threads and Gages; Cast-iron Fittings; Bronze Fittings; Pipe Flanges; Pipe Bends; Pipe Clamps and Hangers; Dimensions of Pipe for Various Services, etc.

No. 13. Boilers and Chimneys.—Flue Spacing and Bracing for Boilers; Strength of Boiler Joints; Riveting; Boiler Setting; Chimneys.

No. 14. Locomotive and Railway Data.—Locomotive Boilers; Bearing Pressures for Locomotive Journals; Locomotive Classifications; Rail Sections; Frogs, Switches and Cross-overs; Tires; Tractive Force; Inertia of Trains; Brake Levers; Brake Rods, etc.

No. 15. Steam and Gas Engines.—Saturated Steam; Steam Pipe Sizes; Steam Engine Design; Volume of Cylinders; Stuffing Boxes; Setting Corliss Engine Valve Gears; Condenser and Air Pump Data; Horsepower of Gasoline Engines; Automobile Engine Crankshafts, etc.

No. 16. Mathematical Tables.—Squares of Mixed Numbers; Functions of Fractions; Circumference and Diameters of Circles; Tables for Spacing off Circles; Solution of Triangles; Formulas for Solving Regular Polygons; Geometrical Progression, etc.

No. 17. Mechanics and Strength of Materials.—Work; Energy; Centrifugal Force; Center of Gravity; Motion; Friction; Pendulum; Falling Bodies; Strength of Materials; Strength of Flat Plates; Ratio of Outside and Inside Radii of Thick Cylinders, etc.

No. 18. Beam Formulas and Structural Design.—Beam Formulas; Sectional Moduli of Structural Shapes; Beam Charts; Net Areas of Structural Angles; Rivet Spacing; Splices for Channels and I-beams; Stresses in Roof Trusses, etc.

No. 19. Belt, Rope and Chain Drives.—Dimensions of Pulleys; Weights of Pulleys; Horsepower of Belting; Belt Velocity; Angular Belt Drives; Horsepower transmitted by Ropes; Sheaves for Rope Drive; Bending Stresses in Wire Ropes; Sprockets for Link Chains; Formulas and Tables for Various Classes of Driving Chain.

No. 20. Wiring Diagrams, Heating and Ventilation, and Miscellaneous Tables.—Typical Motor Wiring Diagrams; Resistance of Round Copper Wire; Rubber Covered Cables; Current Densities for Various Contacts and Materials; Centrifugal Fan and Blower Capacities; Hot Water Main Capacities; Miscellaneous Tables; Decimal Equivalents, Metric Conversion Tables, Weights and Specific Gravity of Metals, Weights of Fillets, Drafting-room Conventions, etc.

MACHINERY, the monthly mechanical journal, originator of the Reference and Data Sheet Series, is published in four editions—the *Shop Edition*, $1.00 a year; the *Engineering Edition*, $2.00 a year; the *Railway Edition*, $2.00 a year, and the *Foreign Edition*, $3.00 a year.

The Industrial Press, Publishers of MACHINERY,

49-55 Lafayette Street, New York City, U. S. A.

LATHE AND PLANER TOOLS

FOURTH REVISED AND ENLARGED EDITION

STANDARD SHOP TOOLS AND THEIR USE
CUTTING SPEEDS AND FEEDS

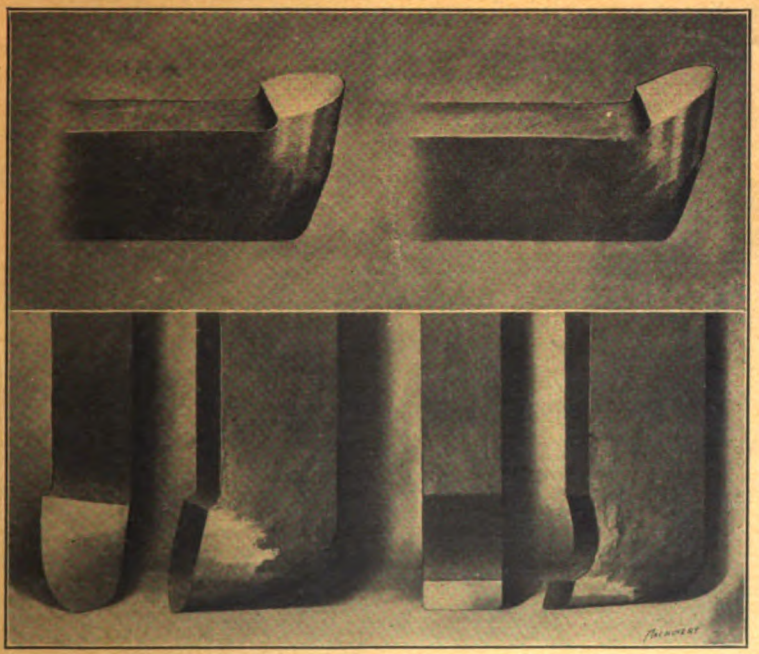

MACHINERY'S REFERENCE BOOK NO. 7
PUBLISHED BY MACHINERY, NEW YORK

This treatise is one unit in a comprehensive Series of Reference books originated by MACHINERY, and including an indefinite number of compact units, each covering one subject thoroughly. The whole series comprises a complete working library of mechanical literature. The price of each books is 25 cents (one shilling) delivered anywhere in the world.

LIST OF REFERENCE BOOKS

No. 1. Worm Gearing.—Calculating Dimensions; Hobs; Location of Pitch Circle; Self-Locking Worm Gearing, etc.

No. 2. Drafting-Room Practice.—Systems; Tracing, Lettering and Mounting.

No. 3. Drill Jigs.—Principles of Drill Jigs; Jig Plates; Examples of Jigs.

No. 4. Milling Fixtures.—Principles of Fixtures; Examples of Design.

No. 5. First Principles of Theoretical Mechanics.

No. 6. Punch and Die Work.—Principles of Punch and Die Work; Making and Using Dies; Die and Punch Design.

No. 7. Lathe and Planer Tools.—Cutting Tools; Boring Tools; Shape of Standard Shop Tools; Forming Tools.

No. 8. Working Drawings and Drafting-Room Kinks.

No. 9. Designing and Cutting Cams.—Drafting of Cams; Cam Curves; Cam Design and Cam Cutting.

No. 10. Examples of Machine Shop Practice.—Cutting Bevel Gears; Making a Worm-Gear; Spindle Construction.

No. 11. Bearings.—Design of Bearings; Causes of Hot Bearings; Alloys for Bearings; Friction and Lubrication.

No. 12. Out of print.

No. 13. Blanking Dies.—Making Blanking Dies; Blanking and Piercing Dies; Split Dies; Novel Ideas in Die Making.

No. 14. Details of Machine Tool De-
n.—Cone Pulleys and Belts; Strength
countershafts; Tumbler Gear Design;
s of Iron Castings.

15. Spur Gearing.—Dimensions;
Strength; Durability.

Machine Tool Drives.—Speeds
s; Single Pulley Drives; Drives
peed Cutting Tools.

trength of Cylinders.—For-
s, and Diagrams.

p Arithmetic for the Ma-
s; Change Gears; Cutting
ndexing; Gearing for Cut-
rles.

Formulas in Mechanics.
plications.

ring.—Rules, Formu-

Tools.—History of
Calipers; Com-
ls; Protractors.

Elements of
of Safety;
Joints; Keys

esign.—Jib
Bearings;
; Pillar

No. 24. Examples of Calculating Designs.—Charts in Designing; Punch and Riveter Frames; Shear Frames; Billet and Bar Passes; etc.

No. 25. Deep Hole Drilling.—Methods of Drilling; Construction of Drills.

No. 26. Modern Punch and Die Construction.—Construction and Use of Subpress Dies; Modern Blanking Die Construction; Drawing and Forming Dies.

No. 27. Locomotive Design, Part I.—Boilers, Cylinders, Pipes and Pistons.

No. 28. Locomotive Design, Part II.—Stephenson and Walschaerts Valve Motions; Theory, Calculation and Design.

No. 29. Locomotive Design, Part III.—Smokebox; Exhaust Pipe; Frames; Cross-heads; Guide Bars; Connecting-rods; Crank-pins; Axles; Driving-wheels.

No. 30. Locomotive Design, Part IV.—Springs, Trucks, Cab and Tender.

No. 31. Screw Thread Tools and Gages.

No. 32. Screw Thread Cutting.—Lathe Change Gears; Thread Tools; Kinks.

No. 33. Systems and Practice of the Drafting-Room.

No. 34. Care and Repair of Dynamos and Motors.

No. 35. Tables and Formulas for Shop and Drafting-Room.—The Use of Formulas; Solution of Triangles; Strength of Materials; Gearing; Screw Threads; Tap Drills; Drill Sizes; Tapers; Keys, etc.

No. 36. Iron and Steel.—Principles of Manufacture and Treatment.

No. 37. Bevel Gearing.—Rules and Formulas; Examples of Calculation; Tooth Outlines; Strength and Durability; Design; Methods of Cutting Teeth.

No. 38. Out of print. See No. 98.

No. 39. Fans, Ventilation and Heating.—Fans; Heaters; Shop Heating.

No. 40. Fly-Wheels.—Their Purpose, Calculation and Design.

No. 41. Jigs and Fixtures, Part I.—Principles of Design; Drill Jig Bushings; Locating Points; Clamping Devices.

No. 42. Jigs and Fixtures, Part II.—Open and Closed Drill Jigs.

No. 43. Jigs and Fixtures, Part III.—Boring and Milling Fixtures.

No. 44. Machine Blacksmithing.—Systems, Tools and Machines used.

No. 45. Drop Forging.—Lay-out of Plant; Methods of Drop Forging; Dies.

No. 46. Hardening and Tempering.—Hardening Plants; Treating High-Speed Steel; Hardening Gages.

No. 47. Electric Overhead Cranes.—Design and Calculation.

No. 48. Files and Filing.—Types of Files; Using and Making Files.

No. 49. Girders for Electric Overhead Cranes.

ook cover for additional titles)

MACHINERY'S REFERENCE SERIES

EACH NUMBER IS A UNIT IN A SERIES ON ELECTRICAL AND STEAM ENGINEERING DRAWING AND MACHINE DESIGN AND SHOP PRACTICE

NUMBER 7

LATHE AND PLANER TOOLS

FOURTH REVISED EDITION

CONTENTS

Cutting Tools for Planer and Lathe, by W. J. KAUP - 3
Boring Tools, by W. J. KAUP - - - - - 11
Forging Lathe Boring Tools, by J. F. SALLOWS - - 17
Shape of Standard Shop Tools - - - - - 20
Cutting Speeds and Feeds for Lathe Tools - - - 29
Straight and Circular Forming Tools, by JOS. M. STABEL and GEO. D. HAYDEN - - - - 34

Copyright, 1912, The Industrial Press, Publishers of MACHINERY,
49-55 Lafayette Street, New York City

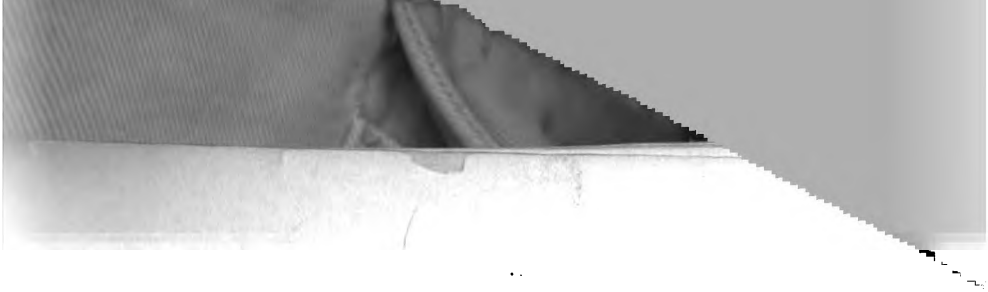

CHAPTER I

CUTTING TOOLS FOR PLANER AND LATHE*

In discussing cutting tools for the planer and lathe, planer tools will first come under our notice as being the simplest and requiring the least skill in setting. Every mechanic has doubtless observed that if the chip be unwound from the spiral shape it assumes in leaving the tool, and projected in a straight line, it is shorter than the surface from which it came. This is due mainly to the compression of the metal in the direction of the cut, and the possibilities of saving power and strain upon the machine by giving proper cutting angles to the tools and reducing this compression to a minimum is thus realized.

Rake of Planer Tools

In Fig. 1 the cutting tool is at right angles to the work and without rake. It exerts its force in a direction nearly parallel to the surface

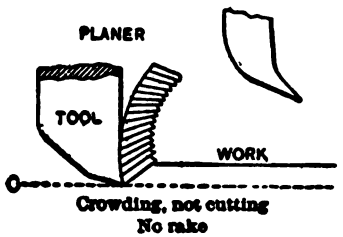

Fig. 1. Tool without Rake, and with Excessive Rake

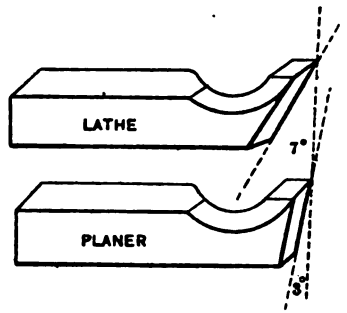

Fig. 2. Proper Rake on Lathe and Planer Tools

of the work, and having no side rake either, it simply does not cut, but shoves or crowds the metal forward, producing a chip made up of little splints. It cannot exert any force tending to lift or curl the chip. The tool is wholly wrong; nor would it materially improve it to grind it like the tool shown in the little sketch at the right, which goes to the other extreme, and would spring into the work. A tool must first of all be heavy enough at the back or heel to resist the horizontal cutting force, and consequently should have very little clearance. The 7 degrees clearance shown in the lathe tool in the upper view, Fig. 2, is too much for a planer tool, while the 3 degrees of the lower sketch is as small as can be used safely. Theoretically if the point leads by only a thousandth or two it will perform its function. There should be very little top rake on account of its tendency to make the tool dig into the cut; but this can be compensated for by giving considerable side rake.

* MACHINERY, August, 1903.

Another reason why a planer tool tends to dig into the work is illustrated in Fig. 3. Point *A* in the sketch is the fulcrum. In the first sketch the tendency is for the tool to dig into the work in the direction of the arrow. This is not so serious as appears on the face of it, as planer tools are usually so stiff that they will spring but little, and any error that might occur in the roughing cut would be eliminated in the finishing cut. What many mechanics take as an indication of the spring of the tool is really due to the chatter of the planer, since a rack and pinion planer will frequently chatter after it has become worn, while in a worm-driven planer the lost motion is all taken up at one end before beginning the cut, and the screw action does away with the chatter. To obviate any spring into the work, the tool may be designed as in the second sketch, Fig. 3, where the deflection due to the force of cut is away from the work.

The tool in Fig. 4 approaches the ideal for a finishing tool, and gives the best finished surface of any used on planer or shaper. It is made from a piece of ordinary tool steel and forged on the end to

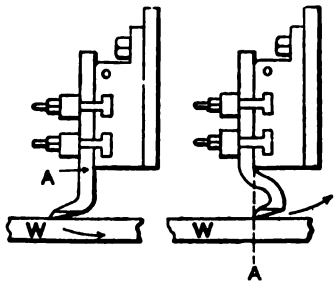

Fig. 3. Cause of Planer Tools Springing into the Work, and Means for Avoiding this

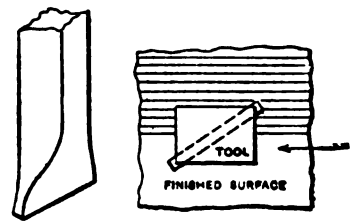

Fig. 4. Finishing Tool of Approved Design for Planer or Shaper

the shape indicated. It will be noticed that it has side rake, and instead of being straight on the bottom, the line that comes in contact with the work is a little rounding.

The Cutting Edges of Lathe Tools

We will now take up the subject of the cutting edges of some of the many varieties of lathe tools, Fig. 5. Here are shown diamond point, round-nose, side, centering, thread-cutting and cutting-off tools. We will first of all consider the diamond point tool, as it is by far more of a universal tool than any of the others. Before speaking of rake, clearance, or the setting of the tool, attention should be called to the general form of the cutting edges and the importance of maintaining the same throughout the life of the tool. Fig. 7 will best illustrate this. The tool as shown at the left, with depth of cut, is ground so that angle x shall not be less than 55 degrees. To the right is a tool in which the angle has been changed by grinding on both sides of the point, only because the machinist claims that he is in a hurry and must make time on his work. But it will be seen that the length of cut b is much greater than the line of resistance a, showing loss in efficiency in the tool, and requiring more power to drive it after it had

been ground. Nor is this the only reason why careless grinding will produce a loss. This is true with proper rake, angles and clearance, but when the mechanic ignores all principles and is careless, besides, how much more serious it becomes, because more finishing cuts will be required to make the piece straight. The nearer the cutting edge of the tool comes to being parallel with the axis of the work, the more power will be required to operate the tool.

It will be interesting to note what really takes place in turning, as shown in diagrammatic form in Fig. 8. Here is represented a piece

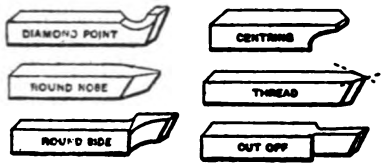

Fig. 5. Various Classes of Lathe Tools

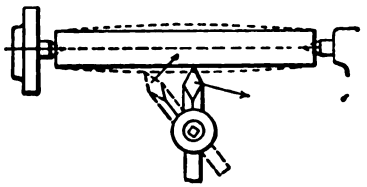

Fig. 6. Correct and Incorrect Setting of Tool

of rough stock that is to be turned as indicated at the right. First, starting at the center line *A*, and developing the line of circumference in a straight path, we will get a line like (1). After turning and repeating the process, the developed line will look like the line at (2). It will be noted that the second line is somewhat irregular, showing that even after roughing off, the surface of the piece has nearly all the irregularities of the rough stock, though on a smaller scale. This

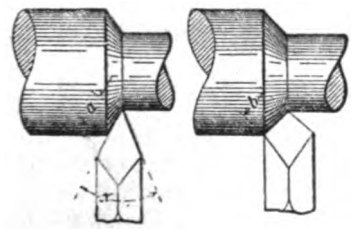

Fig. 7. Effect of Grinding Tool to Improper Angles

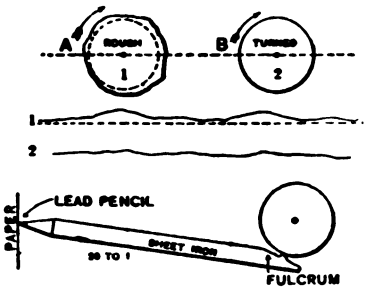

Fig. 8. Diagram Indicating Uneven Surfaces of Rough and Finished Work

brings us to another important point, and that is the necessity of centering work as accurately as possible, for no matter how even the work may be on its circumference, if centered out of true, it will not be round after turning, because the thickness of the chip or shaving is not uniform, hence does not offer uniform resistance to the cutting edge, and the work will bend more at one point than at another. If the cut were uniform and offered the same resistance, of course we could expect round work.

The bottom figure in Fig. 8 illustrates the tool for, and method of, obtaining the lines. A long light lever has a knife edge or point at one end, near the fulcrum, which bears against the periphery of the

work. On the other end is a lead pencil attachment, the point bearing against the piece of paper indicated, the paper traveling at the same rate of speed as the work, only in the direction of the axis of the work. Any unevenness in the surface of the work raises or lowers the point of the pencil, and as the ratio is great (20 to 1), the variation in the line is marked.

Rake and Clearance

Referring to Fig. 2, we will take up the rake and clearance of lathe diamond point tools. The angle of clearance, sometimes called the angle of relief, as indicated here, is about 7 degrees, and sometimes runs to 10 degrees, more or less—enough for a safe working angle. Really, the only reason for so much clearance is to avoid rubbing against the cut surface, thereby causing unnecessary frictional resistance to the motion of the lathe. Our efforts should be directed toward

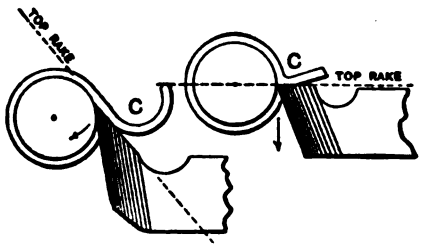

Fig. 9. Extreme Cases of Top Rake

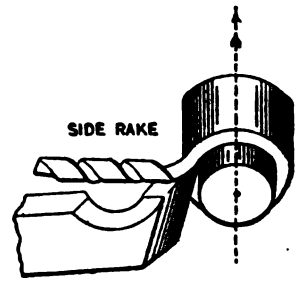

Fig. 10. Properly Ground Tool, having Side Rake

finding the angle that will give the least force required for cutting, combined with endurance of the tool edge.

While the power required to cut is increased greatly by dullness of the cutting edge, we must avoid the wood chisel edge, because time lost in constantly removing the tool for grinding purposes eats up the profit. In Fig. 9 are illustrated two extreme cases—that on the left, too great top rake, and the other, without any. The one will do good work for a few minutes, provided the cut is not too heavy, but the wear of the edge is so great that the angle will soon become blunt, and it would be very much better to have no top rake at all. On the other hand, the cutting wedge, as I will call the tool shown at the right, is too blunt to do good, clean work, and from the position in which it is set, the chip will come off nearly straight and in small pieces. The happy medium between the two is indicated in Fig. 10.

Side rake means the angle at which the top is ground either to the right or left side. A tool ground for a traversing motion toward the left-hand, cannot be used with a motion toward the right. Therefore side rake is designated right-hand or left-hand, the former being that which gives a cutting edge on the right, and the latter, on the left side. As the side rake is increased, the power to drive the tool along in its traversing direction becomes less, as it tends to screw its way along.

Setting the Tool

Fig. 11 illustrates an important point in setting the tool. The further the cutting edge is from the base, or support, the greater will be the spring. Where this spring is possible the point is drawn down into the work as indicated by the dotted line, and furthermore will produce irregularly-shaped work due to the variation in the resistance of the cut at points where the tool digs in. This indicates the value of short leverage. In Continental shops, and especially in England, it has become a recognized principle that the top of the cutting edge of a tool should not be higher than the top of the support, and to obtain top rake, the tool is hollowed out by grinding. Sir Joseph Whitworth designed his lathes so that the tool was set on the center of the work, and any vertical pressure deflected the tool away from the work, as shown in Fig. 12.

Next in importance to the leverage of the tool is the angle at which it is set in relation to the work. Referring now to Fig. 6, the tool is

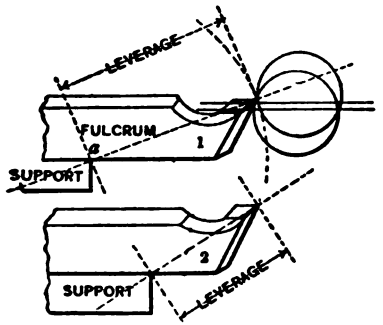

Fig. 11. Supporting the Tool in the Lathe

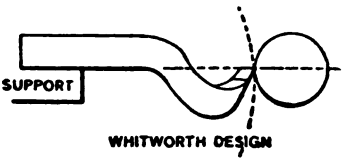

Fig. 12. Design of Tool Permitting it to Spring away from Work

shown at right angles to the work and the cutting pressure tends to force the tool around to the right, away from the work, in the direction of the arrow, instead of causing it to dig into the work. If the tool were set as shown in the dotted position, it will readily be seen that any slipping or deflection would carry it into the cut.

The third point to be observed in regard to setting the tool is its height relative to the lathe centers. Fig. 13 illustrates this. Tool No. 1 is set below the center, and the dotted line, drawn tangent to the point of the tool on the periphery of the circle, indicates the direction in which the cutting force is applied. The top or cutting surface of the tool forms an angle of 90 degrees with this line. The stock is thus merely crowded off by the tool and there is no cutting or wedge action whatever. The next tool is set on the center and has more of a wedge action, but still not what it should be. The top tool, No. 3, gives us the best cutting wedge and will do maximum work with minimum resistance. From the foregoing it is clear that the lathe tool will do the best work with combination of top and side rake, when supported near the cutting edge, held at right angles to the work, and when set about the center. This will lead to economy.

Now a few words about grinding. The diamond point tool should be ground only on the top, and the angles on the sides should never be touched, and there will be no danger in such a case of destroying the economic value of the tool. Many mechanics burn the cutting edges of the tool in grinding, by simple carelessness, which makes the edge

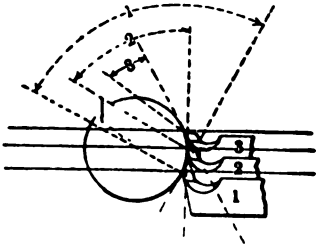

Fig. 13. Setting Lathe Tool to Correct Height

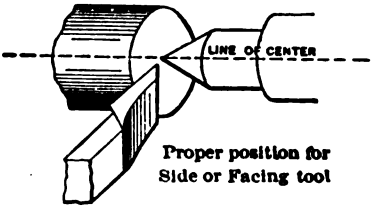

Fig. 14. Setting Side or Facing Tool in Lathe

softer than the metal it is supposted to cut. The references thus far have been confined entirely to the solid tools most commonly used. But there are many improved tool-holders in use, designed for self-hardening steel which is not affected by burning in the hands of incompetent mechanics, either in grinding or through lack of knowl-

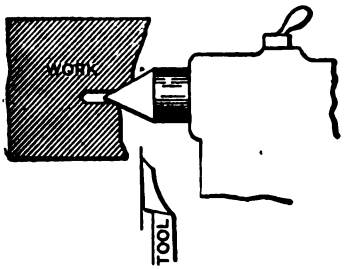

Fig. 15. Improper Bearing in Center of Work not Faced before Turning

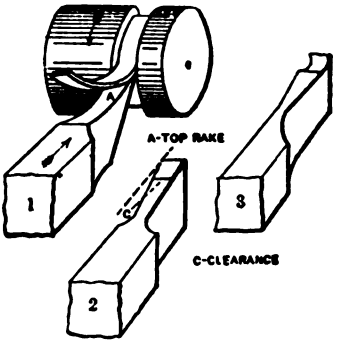

Fig. 16. Action and Form of Cutting-off Tool

edge of the proper cutting speeds. These holders support the steel in such a position as to give the proper front and side clearance, and the rake is determined by the grinding.

Speeds and Feeds

Following is a table of finishing speeds and feeds for different metals for tools of ordinary tool steel. In roughing, the axiom is slow speed and quick feed; in finishing, high speed and fine feed. From this table 25 per cent should be deducted for roughing speed, making 18, 24, 28 and 83. Experiments on cutting tools made in the shops of R. H. Smith, London, England, and verified by the author, show that machine steel requires from two to two and one-half times the power

for cutting as does cast iron, and wrought iron about one and one-half times the power. The results are given in detail in the chart, Fig. 17, which shows the increased force required for increased feed and depth of cut.

Miscellaneous Lathe Tools

The round-nose tool, Fig. 5, is used for brass, when made rather pointed, and for facing cast iron when it has a blunt point. The ten-

LATHE AND PLANER CUTTING SPEEDS AND FEEDS

Tool Steel.		Wrought Iron Machine Steel.		Cast Iron.		Brass.	
S	F	S	F	S	F	S	F
24	25	32	25	38	22	110	20
Lub.		Lub.		Dry		Dry	

F = Number of revolutions to 1 inch feed.
S = " " feet per minute.

dency with brass, which is very soft, would be to pull a hooked tool into the work. The side tool should always be set with the point leading slightly, but remembering that it is not the point but the side of the tool that is to do the cutting. This tool should be set on the center, as indicated in Fig. 14. Fig. 15 shows the necessity for facing

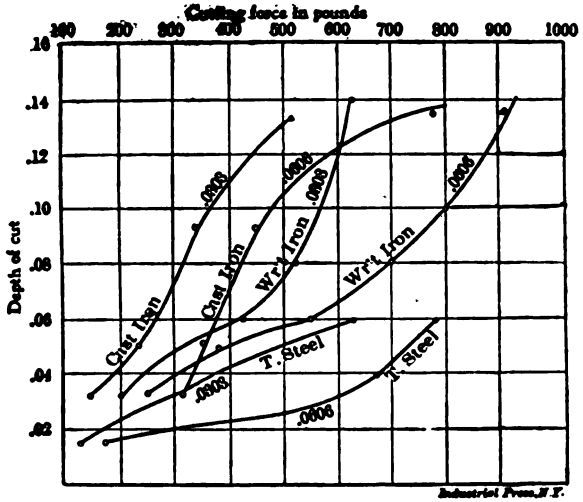

Fig. 17. Chart Showing Cutting Force Required for Increasing Feed and Depth of Cut

up work with the side tool before turning; otherwise the center will give more support to one side of the work than the other, and the pressure of the tool used later for turning will be likely to produce a crushing of the metal at the center, on the side of the least support.

The centering tool should be ground like a twist drill and placed with its cutting point directly at the center of the work and used to obtain an accurate center for starting a drill. Much carelessness is exhibited in the use of the thread-cutting tool, not so much in grinding as in setting. It should be set so that the cutting edges are directly on the line of the lathe centers and, of course, at right angles to it. The economical way to use this tool is to rough out the thread with a heavy cut, and then regrind the top surface until again sharp, and then finish with a light cut. No matter how carefully a thread tool is used the sharp point will wear rapidly.

Referring to Fig. 16, we come to the cutting-off tool, the last of the lathe tools shown in Fig. 5. The upper view shows the action of the tool and the two lower views indicate how good and poor results may

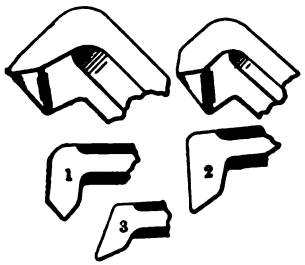

Fig. 18. Types of Boring Tools

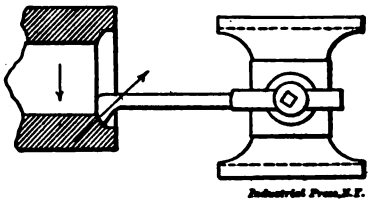

Fig. 19. Cutting Action of Boring Tools

be obtained through grinding. This tool has side clearance, right and left, and should be ground slightly concave on its top face. Its point should be on a level with the center of the work.

In Fig. 18 are indicated several of the more common types of boring tools. The vertical pressure on boring tools is very nearly constant (Fig. 19), and when the tool starts to cut, the depression or spring downward remains very nearly constant throughout its entire cut, and so does not vitally affect the accuracy. The tool wears as it advances, however, and this tends to produce a conical hole. While lathes are adjusted so that in no case they will bore a hole larger at the back than at the front, in making this adjustment, however, the tendency is to have the lathe so it will bore very slightly smaller at the back—another reason why bored holes are frequently a little tapering.

CHAPTER II

BORING TOOLS*

In the previous chapter on cutting tools we confined ourselves entirely to one class, namely, planer and lathe tools, and the different conditions under which the best results can be obtained from them. By best results is understood the maximum amount of good work with the minimum amount of energy expended—the ideal for which every good mechanic is striving. It was attempted to make plain the cardinal points for securing these results, such as proper top and side rake, clearance, rigid clamping, setting of tool so that it will not spring into the work, proper relation of cutting edge to center of work, etc. All these combine to make the cutting edge the basis of economic production, and economic production means not only least cost in manufacture, but a saving in wear and life of the machine.

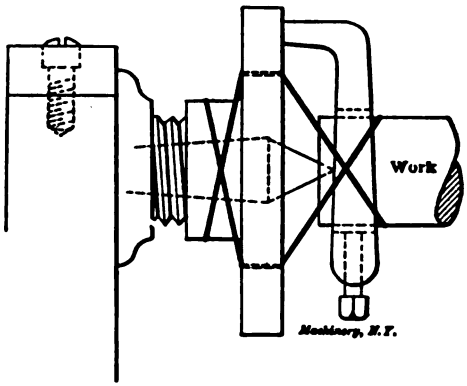

Fig. 20. Method of Holding the Work tightly against the Center

The subject of cutting tools has purposely been divided into two separate heads, as there is a recognized distinction between inside and outside turning. The rake and clearance of a tool for inside turning must be different from that used for outside turning, for two reasons: First, because of the contracted and peculiar conditions under which the boring tool works, and second, because of the spring of both tool and work—very serious conditions met with in boring which do not apply in outside turning. The spring of the work is overcome in many cases by using a steadyrest to support one end of the work while the other end is held in the chuck, or else is clamped to the faceplate and in addition is sometimes supported by the live center itself.

* MACHINERY, October, 1905.

Holding the Work tightly Against the Center

Fig. 20 may serve as a help to some who have found difficulty in keeping the work tight against the center. It shows the faceplate partly unscrewed. The lacing is made fast to a dog or carrier in that position, and the faceplate is then screwed up in place, thereby tightening the thong. Now, unless great care and skill are combined in setting the steadyrest in position, the result will be failure, because, in boring, the object is to get the bore concentric with the outside and it is a very easy matter to defeat this object by careless setting of the rest. A suggestion as to the way of setting may here be in order. If it is a piece that has already been turned on the outside, the centers may be used to good purpose. Keep the live center in the lathe spindle, screw the chuck in position and put the work on centers, as for ordinary turning. Now bring the chuck jaws down to the work and place the rest in position at the dead center end, the work all the while being still on centers. To remove the live center, the rest is then opened, the chuck, with the work in it, unscrewed, and the center

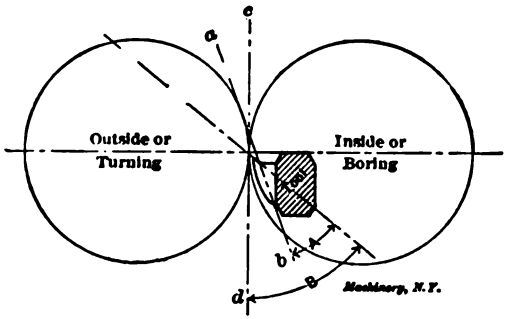

Fig. 21. Comparison of Principles of Outside and Inside Turning

removed. This method will insure fair accuracy, where it can be used, but the work when ready to bore should be tested with an indicator. If it is a rough piece of work that is to be set, support one end by the dead center, turn a true surface for the jaws of the steadyrest and place the same in position while the work is still on the center.

Difference Between Inside and Outside Turning

Fig. 21 will prove that the same laws do not hold for both inside and outside turning. The circle on the left represents a cylinder to be turned; that on the right, a hole to be bored, with the tool in position. The lines *a b* and *c d* are drawn tangent with the work at the point where the cutting edge is in contact with the work, when turning and boring respectively. On the face of it, it would seem that one vertical line should answer for both conditions, but not so, for in turning we are enabled to set the cutting edge of the tool above the center of the work, hence changing the position of the lines and getting a finer cutting wedge. The angle *A* is the angle of the cutting wedge in turning, while *B* is the angle of the cutting wedge in boring. This is the best condition obtainable in boring.

Common Type of Boring Tool

Fig. 22 shows an old-fashioned forged boring tool of the type common in every shop. These tools are forged by the tool dressed in lengths and sizes that will cover a wide range of work, so that different diameters and depths may be bored without redressing. As to results from this type of tool: When the tool starts to perform its function—takes up its cut—there is a downward spring which we call vertical deflection, due to the pressure of the chip on top of the tool. This pressure is nearly constant throughout the entire length of the cut and does not vitally affect the accuracy of the work, particularly since there can be a slight vertical movement of the tool without appreciably changing the diameter of the surface being bored. This is not the case, however, with the lateral pressure on the boring tool, which pressure, being at right angles to the cutting edge, deflects the tool away from the work more and more as the cutting edge dulls, thereby changing the angle of motion of the tool constantly. The result is a conical hole, and much time is lost in taking repeated cuts to get the bore parallel. This type of tool, therefore, does not prove economical, although the outward or lateral pressure will vary somewhat with the shape of the tool and the way in which it is dressed.

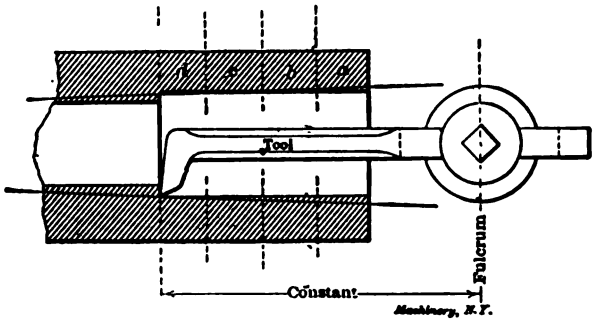

Fig. 22. Common Type of Forged Boring Tool, and Results Obtained

If the front or cutting edge makes an acute angle with the work, the lateral pressure is considerable; but if the cutting edge is at right angles to the work there is less tendency to deflect the tool in a sidewise direction. In the latter case, however, as the cutting edge wears away and the tool becomes dull, there is a tendency for the corner to become worn so as to form an acute angle and we still have some of the same trouble to contend with. Theoretically and practically, a tool ground as in Fig. 22 will give the best results, so far as cutting is concerned, but even by using the greatest care and judgment in dressing and grinding the tool, to reduce sidewise deflection, we cannot altogether remove the difficulty. This question of deflection is largely one of leverage. The amount of deflection depends upon the length of the tool from the binding screw in the toolpost to the cutting edge.

After the tool is once made, its leverage is always a constant quantity, as indicated in Fig. 22, since the tool must always be placed in

approximately the same position in the toolpost. It will, therefore, deflect as much in boring a short hole as in boring a long one, assuming the cutting edge to be in the same condition in each case. The longer the tool, the greater the deflection, for the tool is a cantilever, the deflection of which is increased eight times when its length is doubled. From this we can readily see how important is this consideration of leverage, and how desirable it is to have the boring tool adjustable so that it need project from the point of support only so far as is necessary to bore the full depth of hole required. The mechanic should try to overcome the difficulty due to leverage by devising ways and means for making the tool adjustable. Many schemes are open to the thinking mechanic.

Boring-tool Holders

Fig. 23 will give an idea for a tool-holder and for different tools which are inexpensive and at the same time meet the above require-

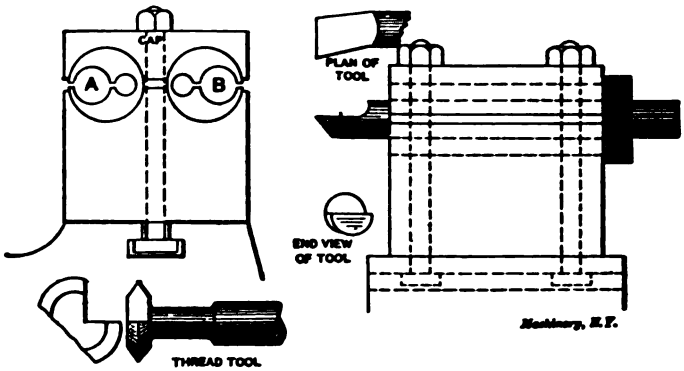

Fig. 23. Boring-tool Holder and Type of Inside Threading Tool

ment. The holder gives at all times the greatest rigidity and allows the use of the largest size of tool possible for any particular work. It also enables the operator to vary the leverage to suit each particular hole.

The holder consists of a rectangular block of cast iron in which two holes are bored, one on each side of the center, and in a plane with the lathe center, and extremely close to the edges. After this, it is sawed in two through the center of the holes, the top forming the cap. The hole may be made any standard size: 1¼, 1⅜, 1½. Into these holes are fitted sleeves or the drill rod itself, although the sleeves give wider range of size of boring tool for each holder, by having a number of sleeves with different standard size holes. The tool fits in either *A* or *B* of the sleeves. If the tool is to be used in *A*, a solid piece is inserted in *B*, so as to give a support for the cap to be clamped against. One end of the sleeve is knurled to allow for thumb and finger adjustment in raising and lowering the tool. Ordinary drill rod is used, filed down to a flat surface at the end, as shown. When heating for the tempering process, set over the filed end

by a blow of a hammer for clearance. A tool nearly the size of the hole to be bored may be used. For instance, an 11/16-inch tool could easily be used to bore a ¾-inch hole. A thread tool of this type is of the greatest advantage in that the tool is always level—the requisite for a true-angle thread.

The good features of this type of tool are: first, it saves expense in forging; second, it saves time in grinding and setting, and in bor-

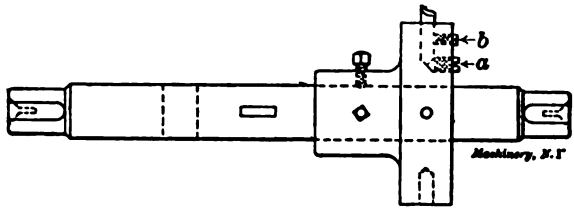

Fig. 24. Simple Type of Boring Bar

ing a true hole; third, it requires less skill and judgment in getting results. As the work increases in weight and size, and it is not practicable to clamp either on faceplate or chuck, the boring bar is substituted, in which case the former conditions are not encountered.

Boring Bars

Many styles of boring bars are used, the one shown in Fig. 24 being possibly one of the simplest type. In the boring bar head one has to consider only the proper cutting edge of the tool; and attention

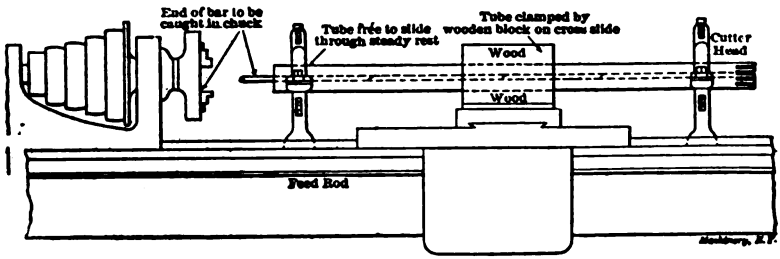
End of bar to be caught in chuck
Tube free to slide through steady rest
Tube clamped by wooden block on cross slide
Cutter Head
Wood
Wood
Feed Rod

Fig. 25. Boring out Tubes

is to be called chiefly to the method of setting out the tool for increasing the depth of cut. The tool itself has a wedge end, and the set-screw *a* a conical end bearing against it, thus forcing the cutter out as the screw moves in. The binding screw *b* comes in contact with a flat side filed or ground on the cutter. Heads of different sizes are made to fit the bar, to suit holes of different diameters, insuring a short tool leverage. There are many improvements possible in this bar, such, for instance, as feeding the tool head by means of a screw carried in the bar and receiving its rotary motion from a stationary gear on the dead center spindle engaging with a gear on the end of the screw.

Boring out Tubes

In many cases it is desirable to bore holes of small diameter but of great length which extend through the entire length of a tube, such for example, as core barrels for rock drilling, where the tube is from 10 to 14 feet long, and as small in some cases as 2 inches in diameter. Fig. 25 will give an idea of the method by which such holes may be bored with very satisfactory results, and in Fig. 26 the boring bar is shown in detail. The bar is made up of sections, say 3 feet long, the sections so constructed that they can be joined together into one bar. The work is supported in the lathe by two steady rests and is clamped to the carriage of the lathe by means of wooden clamps, specially constructed to suit each individual case. The steadyrests are only used to guide and support the tube as the carriage advances, carrying

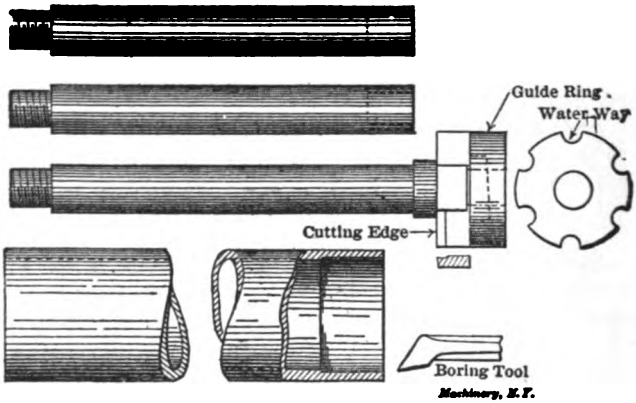

Fig. 26. Tools and Method for Boring out Tubes

the tube with it. The end of the tube is first bored to a depth of about 2 inches with the ordinary boring tool, and made the required size. The bar is then inserted until the cutter head reaches the bored end of the tube which the guide ring on the outer end of the head should fit nicely. The tube is then clamped to the carriage, supported by the steadyrests, and the outer end of the bar is held by the lathe chuck. Allowance should be made for the tube to travel a distance equal to the entire length of one of the boring bar sections. When the tube has advanced this far, one of the sections of the bar is unscrewed and laid aside and the chuck engages the end of the next section, and so the work proceeds until completed. It should be observed that the face only of the tool should be used as a cutting edge, while the outside acts simply as a guide.

CHAPTER III

FORGING LATHE BORING TOOLS*

Cold shuts, the starting point of the water cracks so often found in lathe tools, may be caused by heating the steel too quickly or too slowly. In heating too quickly, the center of the bar does not reach the same degree of heat as the outside of the bar, and consequently the outside part of the bar draws out under the hammer more freely than the center, thus causing a parting of the metal. This is the starting point for a water crack when hardening the tool. Heating a tool too slowly, and exposing it to the air either at the top or bottom, decarbonizes the steel, and a poor lathe tool may be the result.

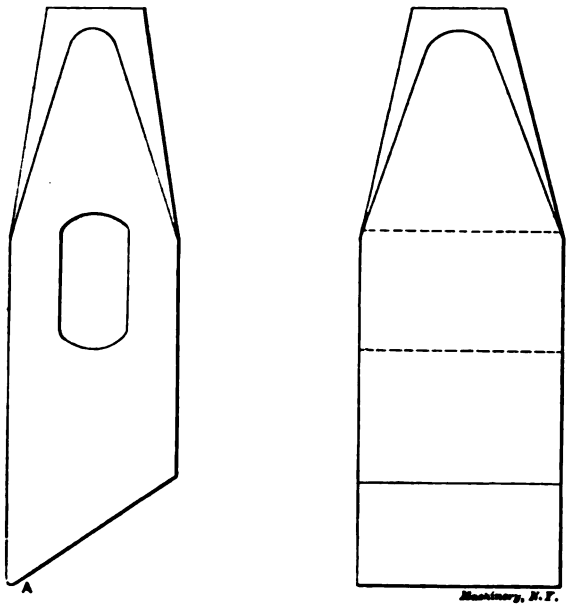

Fig. 27. Bevel Set

When heating tool steel a heavy fire should be used, a good solid foundation of coke being laid in the bottom of the fire, and the steel should be well covered with coke. The smith must watch the steel carefully, and not allow it to remain in the fire and "soak," as is sometimes the case, especially if he has struck a position that is restful, or has started an earnest conversation with his working mate.

* Machinery, September, 1907.

When forging a boring tool, a bevel set should be used of the form shown in Fig. 27, having a round corner at *A*. After heating the steel, drive the set down, making a "V," as shown at *A*, Fig. 28. The rounded corner forms the fillet at the bottom. Some smiths use a large top fuller for making the "V," but the result is a clumsy round cor-

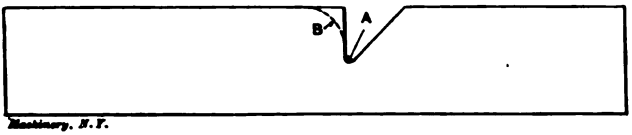

Fig. 28. Characteristic "V" made by Set

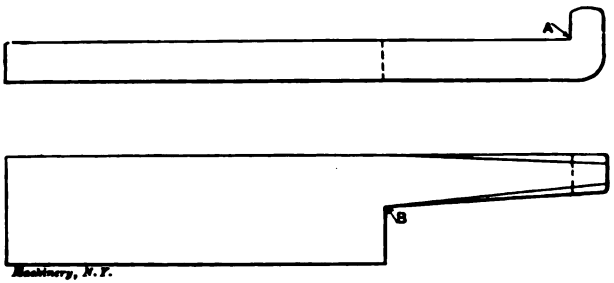

Fig. 29. Tool Blank with Objectionable Sharp Angles

ner as shown by the dotted line *B*. If after drawing out the stem of the tool we turn over the lip on the end of an anvil having sharp corners, we shall get another sharp angle that may be the starting point for a water crack. (See *A*, Fig. 29.) The same also applies to angle *B*, lower view, Fig. 29. The anvil used by the tool dresser should have

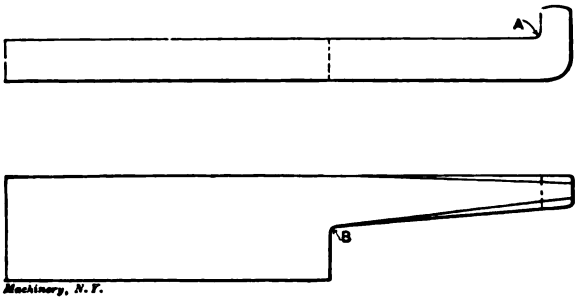

Fig. 30. Tool Blank with Form of Fillets to be Provided

round corners for about four inches from the square end on both sides. Then, when forging a tool that should have fillets in place of the sharp corners as shown at *A* and *B*, Fig. 30, the means are at hand for forming them. Never use a chisel on a lathe tool if it can be avoided.

When about to lengthen out the stem on a boring tool, it is a common practice to heat the tool to a lemon heat, and with a chisel chop

out a piece at *A*, Fig. 31, thus leaving the tool marred by chisel marks that cannot be removed by hammering. Now, when the tool is used up to that part, it cracks every time it is put in the water. The proper way to lengthen a boring tool is as shown in Fig. 32. Drive the bevel set down as at *A*, then cut off the corner *B*, and draw out the stem to the proper length and size. If a boring tool has a fairly good lip and has to be lengthened in the stem, give the stem a half twist after lengthening, and the job is completed.

A common mistake a great many smiths make when tempering or hardening a boring tool is to heat the tool a little too hot, and dip the end into fresh water to a point just above the lip, and hold it still

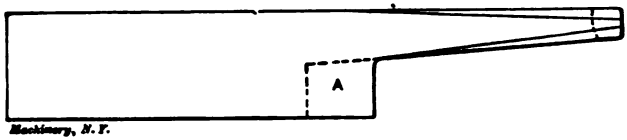

Fig. 31. Bad Practice in Lengthening a Boring Tool Stem

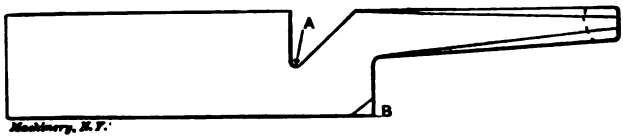

Fig. 32. Recommended Practice for Lengthening a Boring Tool Stem

until it is cold. This is bad practice. In the first place the tool dresser should use salt water for hardening all kinds of tools, for the tools will harden at a much lower heat, and this will do away with cracking. In the second place the tool should be moved around in the water constantly until ready to be removed.

An inside threading tool should be forged in the same way as the boring tool, except that, when trimming off the cutting part, it is shaped differently, being brought to a sharp point with clearance below. It should be tempered the same, however, as the boring tool, but will not stand to be quite so hard.

CHAPTER IV

SHAPE OF STANDARD SHOP TOOLS

The data relating to the proper shape of standard shop tools, and the tables of cutting speeds and feeds, given in this and the following chapter, are the results of experiments undertaken during a long period of years by Mr. Fred W. Taylor. The present chapter is an abstract of that part of Mr. Taylor's work, "On the Art of Cutting Metals," which deals with the proper shape of tools.

In Mr. Taylor's practical experience in managing shops, he found it no easy matter to maintain at all times an ample supply of cutting tools ready for immediate use by each machinist, treated and ground so as to be uniform in quality and shape; and the greater the variety in the shape and size of the tools, the greater became the difficulty of keeping always ready a sufficient supply of uniform tools. His whole experience, therefore, points to the necessity of adopting as small a number of standard shapes and sizes of tools as practicable. It is far better for a machine shop to err upon the side of having too little variety in the shape of its tools rather than on that of having too many shapes.

Standard Tools*

In the engravings Figs. 33 to 44, inclusive, are shown the shapes of the standard tools which Mr. Taylor adopted, and in justification of his selection he states that these tools have been in practical use in several shops, both large and small, through a term of years, and are giving general, all-round satisfaction. It is a matter of interest also to note that in several instances changes were introduced in the design of these tools at the request of some one foreman or superintendent, and after a trial on a large scale in the shop of the suggested improvements, the standards as illustrated here were again returned to. These shapes may be said, therefore, to have stood the test of extended practical use on a great variety of work.

Elements Considered in Adopting Standard Tools

These standard tools may be said to represent a compromise in which each one of the following elements has received most careful consideration, and has had its due influence in the design of the tool; and it can also be said that hardly a single element in the tools is such as would be adopted if no other element required consideration. The following, broadly speaking, are the four objects to be kept in mind in the design of a standard tool:

a. The necessity of leaving the forging or casting to be cut with a true and sufficiently smooth surface;

b. The removal of the metal in the shortest time;

* MACHINERY, March, 1907.

c. The adoption of that shape of tool which shall do the largest amount of work with the minimum combined cost of grinding, forging and tool steel;

d. The ready adaptability to a large variety of work.

As we go further into this subject, the nature of the conflict between these four objects and of the sacrifice which each element is called upon to make by one of the others will become apparent. Generally speaking, it is necessary to adopt as our standard shape a tool which can be run at only about, say, five-eighths of the cutting speed which the knowledge of the art and the experiments show could be obtained through another tool of entirely different shape, if no other element than that of cutting speed required consideration. It becomes necessary to sacrifice cutting speed to securing smaller liability to chatter; a truer finish; a greater all-round convenience for the operator in using the tool, and a comparatively cheaper dressing and grinding.

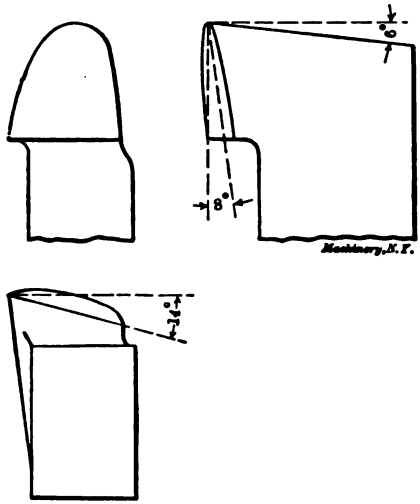

Fig. 33. Tool for Cutting Cast Iron and Hard Steel

The most important of the above considerations, however, is the freedom from chatter.

On the other hand, it is necessary to adopt a rather more elaborate and expensive method of dressing the tools than is usual, in order to provide a shape of tool which allows it to be ground a great many times without redressing, and also in order to make a single Taylor-White heat treatment of the tool last longer than it otherwise would. And again, the shape of the curve of the cutting edge of the tool adopted—first, to insure against chatter, and second, for all-round adaptability in the lathe—calls for much more expense and care in the grinding than would be necessary if a more simple shape were used. This necessitates in a shop either a specially trained man to grind the tool by hand to the required templets and angles, or preferably the use of an automatic tool grinder.

Relative Importance of the Elements Affecting the Cutting Speed

The cutting speed of a tool is directly dependent upon the following elements. The order in which the elements are given indicates their relative effect in modifying the cutting speed, and in order to compare them, we have given in each case figures which represent, broadly speaking, the ratio between the lower and higher limits of speed as affected by each element.

A. The quality of the metal which is to be cut, *i.e.*, its hardness or other qualities which affect the cutting speed. Proportion is as 1 in the case of semi-hardened steel or chilled iron, to 100 in the case of very soft low-carbon steel.

B. The chemical composition of the steel from which the tool is made, and the heat treatment of the tool. Proportion is as 1 in tools made from tempered carbon steel, to 7 in the best high-speed tools.

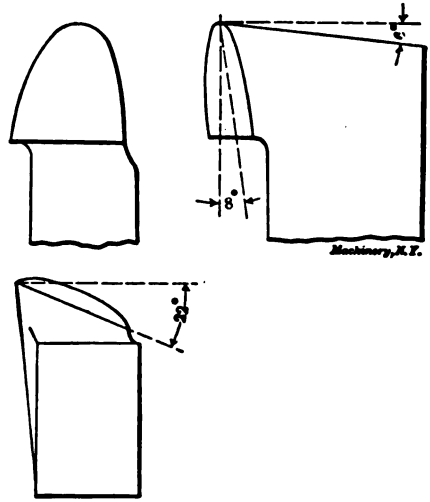

Fig. 84. Tool for Cutting Medium and Soft Steel

C. The thickness of the shaving; or, the thickness of the spiral strip or band of metal which is to be removed by the tool, measured while the metal retains its original density; not the thickness of the actual shaving, the metal of which has become partly disintegrated. Proportion is as 1 with thickness of shaving 3/16 of an inch, to 3 1/2 with thickness of shaving 1/64 of an inch.

D. The shape or contour of the cutting edge of the tool, chiefly because of the effect which it has upon the thickness of the shaving. Proportion is as 1 in a thread tool, to 6 in a broad-nosed cutting tool.

E. Whether a copious stream of water or other cooling medium is used on the tool. Proportion is as 1 for tool running dry, to 1.41 for tool cooled by a copious stream of water.

F. The depth of the cut; or, one-half of the amount by which the forging or casting is being reduced in diameter in turning. Proportion is as 1 with ½-inch depth of cut, to 1.36 with ⅛-inch depth of cut.

G. The duration of the cut; *i.e.*, the time which a tool must last under pressure of the shaving without being reground. Proportion is as 1 when tool is to be ground every 1½ hour, to 1.207 when tool is to be ground every 20 minutes.

H. The lip and clearance angles of the tool. Proportion is as 1 with lip angles of 68 degrees, to 1.023 with lip angle of 61 degrees.

J. The elasticity of the work and of the tool on account of producing chatter. Proportion is as 1 with tool chattering, to 1.15 with tool running smoothly.

The quality of the metal which is to be cut is, generally speaking, beyond the control of those who are in charge of the machine shop, and, in fact, in most cases the choice of the hardness of metals to be used in forgings or castings will hinge upon other considerations which are of greater importance than the cost of machining them. The chemical composition of the steel from which the tool is made and the heat treatment of the tool will, of course, receive the most careful consideration in the adoption of a standard tool. No shop, however,

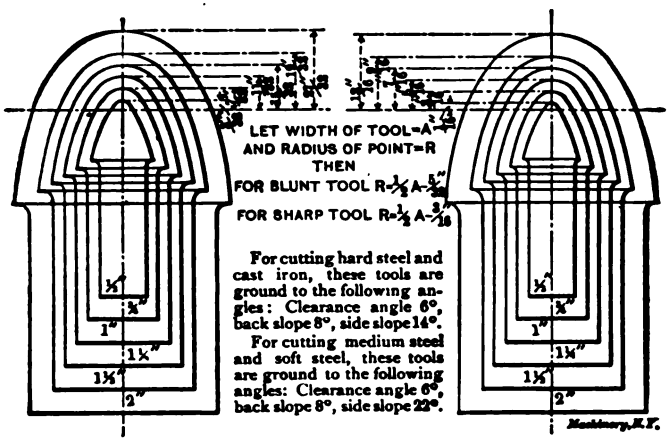
LET WIDTH OF TOOL=A
AND RADIUS OF POINT=R
THEN
FOR BLUNT TOOL R=½ A-5/32"
FOR SHARP TOOL R=⅛ A-3/16
For cutting hard steel and cast iron, these tools are ground to the following angles: Clearance angle 6°, back slope 8°, side slope 14°.
For cutting medium steel and soft steel, these tools are ground to the following angles: Clearance angle 6°, back slope 8°, side slope 22°.
½"
¾"
1"
1¼"
1½"
2"

Figs. 35 and 36. Outline of Cutting Edge of Standard Round-nosed Tools

can now afford to use other than the "high-speed" tools, and there are so many makes of good tool steels, which, after being forged into tools and heated to the melting point according to the Taylor-White process, will run at about the same high cutting speeds, that it is of comparatively small moment which particular make of high-speed steels is adopted.

Advantages of Round-nosed Tools

With round-nosed tools, as the depth of cut becomes more shallow, there is a greater increase in the cutting speed than in the case of tools having straight-line cutting edges, because with a round-nosed tool the thickness of the shaving becomes thinner as the extreme nose of the tool is approached. In the case of round-nosed tools, therefore, when the depth of the cut is diminished, the cutting speed is increased for two entirely different reasons:

A. Because the chip bears upon a smaller portion of the cutting edge of the tool.

B. Because the average thickness of the chip which is being removed is thinner in the case of round-nosed tools with a shallow depth of cut than it is with the deeper cuts.

Object of Having the Cutting Edge of Tools Curved

A tool whose cutting edge forms a curved line of necessity removes a shaving which varies in its thickness at all parts. The only type of tool which can remove a shaving of uniform thickness is one with a straight-line cutting edge. The object in having the line of the cutting edge of a roughing tool curved as that part of the cutting edge which does the finishing is approached, is to thin down the shaving at this point to such an extent as will insure the finishing part of the tool remaining sharp and uninjured even though the main portion of the cutting edge may have been ruined through over-heating or from some other cause.

Advantages and Disadvantages of Broad-nosed Tools

Upon appreciating the increase in the cutting speed obtained through thinning down the shaving as shown in the experiments with straight cutting edge tools, the tools shown in Figs. 45, 46 and 48 were made, and used on roughing work for years in the axle lathes of the Midvale Steel Company. The gain in cutting speed of these standard broad-

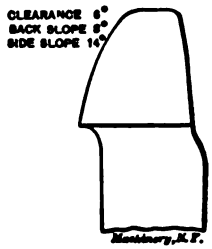

Fig. 37. Standard Tool for Wide Feeds

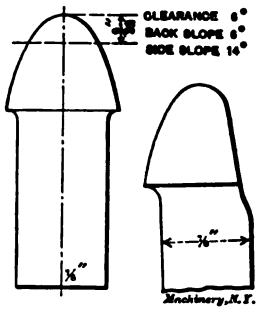

Fig. 38. Tool used in most of the Taylor Experiments

nosed tools over our standard round-nosed tools, shown in Figs. 37 and 38, is in the ratio of 1.30 : 1. This general shape of tool continues to be extensively used, but it is subject to the disadvantage that it is likely to cause the work to chatter, and so leave a more or less irregular finish. Were it not for this difficulty, added to the fact that the standard round-nosed tool has a greater all-round adaptability and convenience, the tools illustrated in Figs. 45, 46 and 48 would undoubtedly be the proper shapes for shop standards.

Influence of Small Radius of Curvature on Chatter

Since the thickness of the shaving is uniform with straight edge tools, it is evident that the period of high pressure will arrive at all points along the cutting edge of this tool at the same instant and will be followed an instant later by a corresponding period of low pressure; and that when these periods of maximum and minimum pressure approximately correspond to, or synchronize with the natural periods of vibration either in the forging, the tool, the tool support, or in any part of the driving mechanism of the machine, there will be a resultant

Fig. 39 Fig. 40 Fig. 41 Fig. 42 Fig. 43 Fig. 44

Standard Sizes and Shapes of Tools

chatter in the work. On the other hand, in the case of tools with curved cutting edges, the thickness of the shaving varies at all points along the cutting edge. From this fact it is obvious that when the highest pressure corresponding to one thickness of shaving along a curved cutting edge is reached, the lowest pressure which corresponds to another thickness of shaving at another part of the cutting edge is likely to occur at about the same time, and that therefore variations up and down in pressure at different parts of the curve will balance or compensate one for the other. It is evident, moreover, that at no one period of time can the wave of high pressure or low pressure extend along the whole length of the curved cutting edge.

Relation Between Cost of Forging and Grinding

In adopting the general shape or conformation of a tool (we do not here refer to the curve of the cutting edge), the most important consideration is that of selecting a shape with which the largest amount of work can be done for the smallest *combined cost of forging or dressing and grinding*, and the dressing is the much more expensive of these two operations. It is, therefore, of paramount importance to so design the tool that it can be ground:

a. The greatest number of times with a single dressing;

b. With the smallest cost each time it is ground.

Modern high-speed tools when run at economical speeds are injured much more upon the lip surface than upon the clearance flank. Therefore, at each grinding a larger amount of metal must be ground away from the lip surface than from the clearance flank; and yet in many cases the clearance flank will be more or less injured (rubbed or scraped away) below the cutting edge, and it therefore becomes necessary, for maximum economy, in practical use, to grind roughing tools both upon their lip and their clearance surfaces.

In many shops the practice still prevails of merely cutting a piece of the proper length from a bar of steel and grinding the curve or outline of the cutting edge at the same level as the top of the tool, as shown in Figs. 47 and 49. This entails the minimum cost for dressing, but makes the grinding very expensive, since the lip surface must be ground down into the solid bar of steel, thus bringing the corner of the grindstone or emery wheel at once into action and keeping it continually at work. This quickly rounds over the corner of the stone, and necessitates its frequent truing up, thus increasing the cost of grinding, both owing to the waste of the stone and the time required to keep it in order; and it also leaves the face of the grindstone high in the center most of the time, and unfit for accurate work. As far as possible, then, the shape of standard cutting tools should be such as to call for little or no grinding in which the corner of the emery wheel does much work. With the type of tool illustrated in Fig. 49, also, comparatively few grindings will make a deep depression in the body of the tool, as shown in the lower view of Fig. 50, and this depression will, of course, be greater the steeper the back slope of the lip surface of the tool.

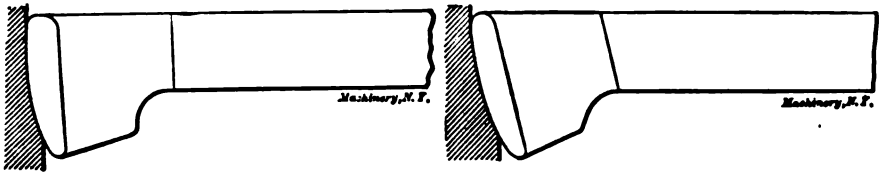

Figs. 45 and 46. Examples of Broad-nosed Tools

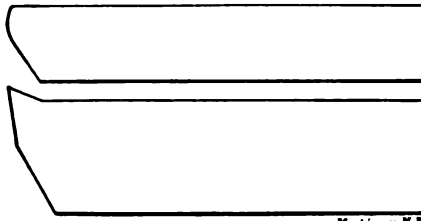

Fig. 47. Common, but Objectionable Way of Dressing Tools

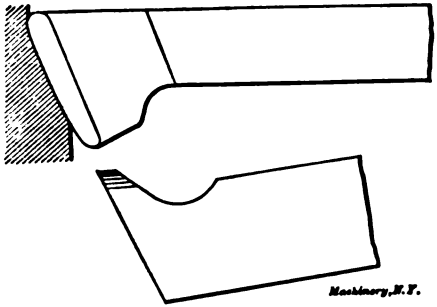

Fig. 48. Example of Broad-nosed Tool

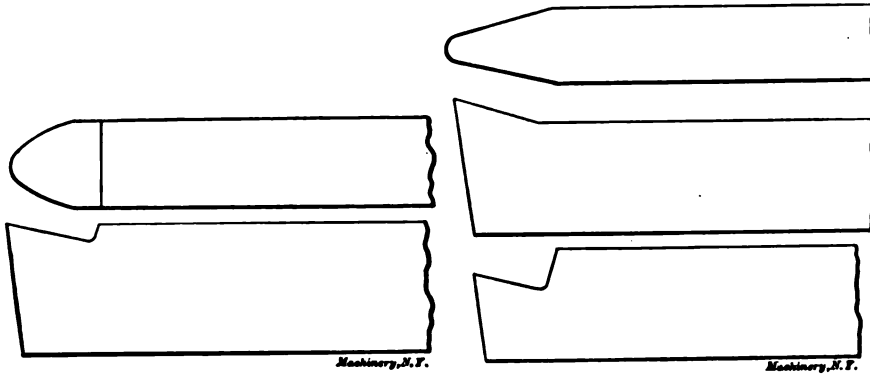

Figs. 49 and 50. Incorrectly Dressed Tools

To avoid these difficulties, perhaps the larger number of well-managed machine shops in this country have adopted a type for dressing their tools in which the front of the tool is forged slightly above the level of the tool, as shown in the lower view of Fig. 47 and in the middle view of Fig. 50. This type of tool dressing is done in each of the following ways:

A. By laying the tool on its side and slightly flattening its nose by striking it with a sledge, thus narrowing the nose of the tool and at the same time raising it slightly above the level of the top of the tool.

B. By cutting off the clearance flank of the tool at a larger angle than is demanded for clearance, and then slightly turning up the cutting edge of the tool through sledging upon the clearance flank while the tool is held upon the edge of the anvil with its shank below the level of the anvil.

The objection to both of these types is that the tools require redressing after being ground a comparatively small number of times, and that when redressed, in many cases the whole nose of the tool is cut off and thrown away. This waste of metal, however, is of much less consequence than the frequency of dressing. With the first of these types of tool dressing the tendency is to make the nose of the tool too thin, that is, having too small a radius of curvature, and thus to furnish a tool which must be run at too slow a cutting speed.

Length of Shanks of Cutting Tools*

In choosing the proper lengths for cutting tools, we again find two conflicting considerations:

A. It requires a certain very considerable length for the shank of the cutting tool in order to fasten or clamp it in its toolpost. When the tool becomes shorter than this minimum, it must be thrown away, thus wasting costly metal, particularly in the case of the modern high-speed tools.

B. On the other hand, the longer the body of the tool, the more awkward and the slower become all of the operations in handling the tool, beginning with the dressing and followed by the grinding, storing, handling in the tool-room, and setting and adjusting in the machine.

There is no definite, clear-cut method of comparing the relative loss in handling long and heavy tools with that of the waste of the tool steel, so that the adoption of standard lengths for dressing tools of various sizes has been largely a matter of "rule of thumb" judgment, and the length of tools which have been adopted, corresponding to different sized bodies, is given in the table below.

Let width of shank of tool $= A$, and length of tool $= L$; then $L = 14A + 4$ inches.

Size of Shank of Tool, inches.	Length of Tool, inches.	Size of Shank of Tool, inches.	Length of Tool, inches.	Size of Shank of Tool, inches.	Length of Tool, inches.
½ x ¾	11	⅞ x 1⅜	16¼	1½ x 2¼	25
⅝ x 1	12¾	1 x 1½	18	1¾ x 2⅝	28½
¾ x 1¼	14½	1¼ x 1⅞	21½	2 x 3	32

* MACHINERY, April, 1907.

CHAPTER V

CUTTING SPEEDS AND FEEDS FOR LATHE TOOLS*

A study of the effect of the feed and depth of cut upon the cutting speed constitutes the most important element in the art of cutting metals. The three questions which must be answered each day in every machine shop by every machinist who is running a metal cutting machine, such as a lathe, planer, etc., are:

What tool shall I use?
What cutting speed shall I use?
What feed shall I use?

Having in the previous chapter already given the standards for the shape and quality of the tools, there remain but two of these questions to be answered, namely, those relating to the cutting speed and the feed; and the decision as to the cutting speed will depend more upon the depth of cut and feed which are chosen than upon any other element.

In the accompanying tables,† pages 30 to 33, inclusive, are given practical working data which will be found useful by machine shop foremen and machinists as a general guide in determining what cutting speed to use under several of the usual or typical conditions met with in ordinary machine shop practice. The cutting speeds given here are based upon the use of standard tools for cutting hard steel and cast iron as well as for cutting medium and soft steel. In preparing these tables the use of the best quality of high-speed steel tools, treated in the best manner, was assumed. The tables were also based upon cutting three different qualities of steel, and the following cutting speeds when cut with standard ⅞-inch tool, 3/16 × 1/16-inch, for standard 20-minute cut.

Hard steel: (such for instance as is used in a hard locomotive tire), cutting speed, 45 feet per minute.

Medium steel: cutting speed, 99 feet per minute.

Soft steel: cutting speed, 108 feet per minute.

The tables made out for cutting cast iron are based upon three qualities of cast iron representative of hard, medium and soft cast iron as ordinarily found in the average machine shop in this country. In each shop, however, accurate experiments should be made to determine the average cutting speeds of the cast iron actually used. It is more difficult to predict the correct cutting speed for cast iron than for steel. The physical properties of steel constitute a fairly accurate guide to its cutting speed; and these properties are best indicated by the tensile strength and percentage of stretch and contraction of area obtained from standard tensile test bars cut from such a position in the body of the forging as to represent its average quality, and then broken in a testing machine.

* MACHINERY, August, 1907.
† From MACHINERY'S Data Sheet No. 72, August, 1907.

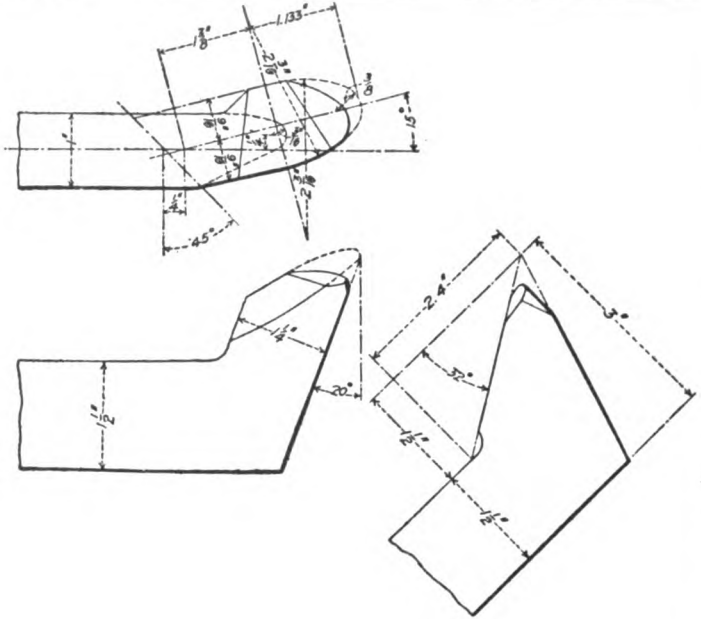

Detailed Dimensions of 1-inch Round Nose Roughing Tool. Forged Outline shown by Dotted Lines and Ground Form by Full Lines. Clearance, 6 degrees; Back slope, 8 degrees, and Side Slope 14 degrees.

Standard 1¼ inch Tool

Depth of Cut in Inches	Feed in Inches	Cutting Speed, in feet per minute for a tool which is to last 1 hour and 30 minutes before regrinding		
		Soft Steel	Medium Steel	Hard Steel
3/32	1/64	518	259	118
	1/32	366	183	83.2
	1/16	257	129	58.4
	3/32	209	105	47.5
1/8	1/64	450	225	102
	1/32	317	158	72.0
	1/16	223	112	50.7
	3/32	182	90.8	41.4
	1/8	157	78.5	35.7
3/16	1/64	370	185	84.1
	1/32	260	130	59.1
	1/16	183	91.7	41.6
	3/32	149	74.6	33.8
	1/8	129	64.5	29.3
	3/16	105	52.6	23.8
1/4	1/64	322	161	73.2
	1/32	227	113	51.6
	1/16	159	79.7	36.1
	3/32	130	65.0	29.5
	1/8	112	56.1	25.5
	3/16	91.4	45.7	20.8
3/8	1/64	264	132	60.0
	1/32	186	93.1	42.3
	1/16	131	65.5	29.8
	3/32	107	53.4	24.1
	1/8	92.2	46.1	20.8
1/2	1/64	230	115	52.3
	1/32	162	80.9	36.8
	1/16	114	56.9	25.9
	3/32	92.6	46.3	21.0

Standard 1 inch Tool

3/32	1/64	490	245	111
	1/32	339	169	77.0
	1/16	235	117	53.4
	3/32	189	94.5	43.0
1/8	1/64	427	214	97.0
	1/32	296	148	67.2
	1/16	205	102	46.0
	3/32	165	83.0	37.5
	1/8	142	71.0	32.3
3/16	1/64	358	179	81.3
	1/32	247	124	56.1

Standard 1 inch Tool (Continued)

Depth of Cut in Inches	Feed in Inches	Cutting Speed in feet per minute for a tool which is to last 1 hour and 30 minutes before re-grinding		
		Soft Steel	Medium Steel	Hard Steel
3/16	1/16	171	85.5	38.8
	3/32	138	69.0	31.3
	1/8	118	59.0	26.8
	3/16	95.0	47.5	21.6
1/4	1/64	315	157	71.6
	1/32	218	109	49.5
	1/16	150	75.0	34.1
	3/32	121	60.5	27.5
	1/8	104	52.0	23.6
3/8	1/64	263	132	59.8
	1/32	182	91.0	41.4
	1/16	126	62.8	28.5
	3/32	101	50.6	23.0
1/2	1/64	232	116	52.7
	1/32	161	80.5	36.6
	1/16	111	55.7	25.3

Standard 7/8 inch Tool

3/32	1/64	476	238	108
	1/32	325	162	73.8
	1/16	222	111	50.4
	3/32	177	88.4	40.2
1/8	1/64	420	210	95.5
	1/32	286	143	65.0
	1/16	195	97.6	44.4
	3/32	156	77.9	35.4
	1/8	133	66.4	30.2
3/16	1/64	352	176	80.0
	1/32	240	120	54.5
	1/16	164	82	37.3
	3/32	131	65.5	29.8
	1/8	112	56.0	25.5
1/4	1/64	312	156	70.9
	1/32	213	107	48.4
	1/16	145	72.6	33.0
	3/32	116	58.1	26.4
3/8	1/64	264	132	60.0
	1/32	180	90.2	41.0
	1/16	122	61.1	27.8
1/2	1/64	237	118	53.8
	1/32	162	80.8	36.7

Standard 3/4 inch Tool

3/32	1/64	482	241	110
	1/32	323	161	73.4
	1/16	217	108	49.3
	3/32	172	85.8	39.0
1/8	1/64	423	212	96.1
	1/32	284	142	64.5
	1/16	190	95.2	43.2
	3/32	151	75.3	34.2
	1/8	128	63.8	29.0
3/16	1/64	358	179	81.4
	1/32	240	120	54.5
	1/16	161	80.5	36.6
	3/32	127	63.7	28.7
1/4	1/64	320	160	72.7
	1/32	215	107	48.8
	1/16	144	72	32.7
3/8	1/64	276	138	62.7
	1/32	185	92.4	42.0

Standard 3/8 inch Tool

1/16	1/64	548	274	125
	1/32	358	179	81.6
	1/16	235	117	53.3
3/32	1/64	467	234	106
	1/32	306	153	69.5
	1/16	200	100	45.5
	3/32	156	78.0	35.5
1/8	1/64	417	209	94.8
	1/32	273	136	62.0
	1/16	179	89.3	40.6
	3/32	140	69.8	31.7
3/16	1/64	362	181	82.2
	1/32	236	118	53.8
	1/16	155	77.4	35.2
1/4	1/64	328	164	74.5
	1/32	215	107	48.8
3/8	1/64	286	143	65.0

Standard 1/2 inch Tool

1/16	1/64	510	255	116
	1/32	322	161	73.2
	1/16	203	102	46.2
3/32	1/64	445	223	101
	1/32	281	141	63.9
	1/16	177	88.7	40.2
	3/32	135	67.4	30.7
1/8	1/64	404	202	91.8
	1/32	255	128	57.9
	1/16	161	81	36.6
3/16	1/64	359	179	81.6
	1/32	226	113	51.4
1/4	1/64	330	165	25.0

Standard 1¼ inch Tool

Depth of Cut in Inches	Feed in Inches	Cutting Speed, in feet per minute for a tool which is to last 1 hour and 30 minutes before regrinding		
		Soft Cast Iron	Medium Cast Iron	Hard Cast Iron
3/32	1/64	239	119.6	69.8
	1/32	191	95.3	55.6
	1/16	142	70.8	41.3
	3/32	118	59.1	34.4
	1/8	103	51.1	30.2
	3/16	85.0	42.5	24.8
1/8	1/64	216	108	63.1
	1/32	172	86.2	50.3
	1/16	128	64.0	37.3
	3/32	107	53.4	31.2
	1/8	93.4	46.7	27.3
	3/16	76.8	38.4	22.4
3/16	1/64	187	93.5	54.6
	1/32	149	74.6	43.6
	1/16	111	55.5	32.7
	3/32	92.5	46.3	27.0
	1/8	73.1	36.5	21.3
	3/16	66.4	33.2	19.4
1/4	1/64	168	84.1	49.1
	1/32	134	67.2	39.2
	1/16	99.8	49.9	29.1
	3/32	83.2	41.6	24.3
	1/8	72.6	36.3	21.2
	3/16	59.7	29.8	17.4
3/8	1/64	144	71.8	41.9
	1/32	115	57.3	33.4
	1/16	85.1	42.6	24.8
	3/32	70.9	35.5	20.7
	1/8	62.0	31.0	18.1
	3/16	51.0	25.5	14.9
1/2	1/64	131	55.6	38.3
	1/32	105	52.3	30.5
	1/16	77.6	38.8	22.7
	3/32	64.7	32.4	18.9
	1/8	56.6	28.3	16.5
	3/16	46.5	23.3	13.6
3/4	1/64	112	56.0	32.7
	1/32	89.2	44.6	26.0
	1/16	66.2	33.1	19.3
	3/32	55.2	27.6	16.1
	1/8	48.3	24.2	14.1
	3/16	39.7	19.8	11.6

Standard 1 inch Tool

3/32	1/64	226	113	66.0
	1/32	177	88.4	51.6
	1/16	130	64.8	37.8
	3/32	107	53.5	31.2
	1/8	92.8	46.4	27.1
	3/16	75.7	37.8	22.1
1/8	1/64	205	102	59.8
	1/32	160	85.1	46.8
	1/16	118	58.8	34.3
	3/32	97.0	48.5	23.3
	1/8	84.2	42.1	24.6
	3/16	68.6	34.3	20.0
3/16	1/64	181	90.6	52.9
	1/32	142	70.8	41.3
	1/16	104	51.9	30.3
	3/32	85.8	42.9	25.0
3/16	1/8	74.3	37.2	21.7
	3/16	60.6	30.3	17.7
1/4	1/64	165	82.3	48.1
	1/32	129	64.4	37.5
	1/16	94.3	47.1	27.5
	3/32	77.8	38.9	22.7
	1/8	67.5	33.7	19.7
	3/16	55.0	27.5	16.1
3/8	1/64	143	71.5	41.8
	1/32	112	56.0	32.6
	1/16	81.9	41.0	23.9
	3/32	67.6	33.8	19.7
	1/8	58.6	29.3	17.1
	3/16	57.5	28.7	16.8
1/2	1/64	132	66.2	38.6
	1/32	104	51.6	30.2
	1/16	75.8	37.9	22.1
	3/32	62.6	31.3	18.3
	1/8	54.2	27.1	15.8
	3/16	44.2	22.1	12.9

Standard ⅞ inch Tool

3/32	1/64	220	110	64.2
	1/32	169	84.6	49.4
	1/16	122	61.2	35.7
	3/32	99.8	49.9	29.1
	1/8	86.4	43.2	25.2
	3/16	70.1	35.1	20.5
1/8	1/64	202	101	58.9
	1/32	150	77.8	45.4
	1/16	112	56.2	32.8
	3/32	91.8	45.9	26.8
	1/8	79.3	39.7	23.2

Standard $\frac{7}{8}$ inch Tool (Continued)

Depth of Cut in Inches	Feed in Inches	Cutting Speed, in feet per minute for a tool which is to last 1 hour and 30 minutes before regrinding		
		Soft Cast Iron	Medium Cast Iron	Hard Cast Iron
$\frac{3}{16}$	$\frac{1}{64}$	178	89.0	52.0
	$\frac{1}{32}$	137	68.6	40.1
	$\frac{1}{16}$	99.4	49.7	29.0
	$\frac{3}{32}$	81.0	40.5	23.7
	$\frac{1}{8}$	70.1	35.0	20.5
	$\frac{3}{16}$	56.8	28.4	16.6
$\frac{1}{4}$	$\frac{1}{64}$	163	81.5	47.7
	$\frac{1}{32}$	126	62.9	36.7
	$\frac{1}{16}$	90.8	45.4	26.5
	$\frac{3}{32}$	74.1	37.0	21.6
	$\frac{1}{8}$	64.1	32.0	18.7
	$\frac{3}{16}$	52.0	26.0	15.2
$\frac{3}{8}$	$\frac{1}{64}$	144	71.8	41.9
	$\frac{1}{32}$	111	55.4	32.3
	$\frac{1}{16}$	80.0	40.0	23.4
	$\frac{3}{32}$	65.3	32.6	19.1
	$\frac{1}{8}$	56.4	28.2	16.5
	$\frac{3}{16}$	45.8	22.9	13.4
$\frac{1}{2}$	$\frac{1}{64}$	135	67.5	39.4
	$\frac{1}{32}$	104	52.1	30.4
	$\frac{1}{16}$	75.2	37.6	22.0
	$\frac{3}{32}$	61.4	30.7	17.9
	$\frac{1}{8}$	43.1	21.6	12.6

Standard $\frac{3}{4}$ inch Tool

$\frac{3}{32}$	$\frac{1}{64}$	222	111	65.0
	$\frac{1}{32}$	169	84.3	49.2
	$\frac{1}{16}$	120	59.8	34.9
	$\frac{3}{32}$	97.0	48.5	28.3
	$\frac{1}{8}$	83.4	41.7	24.4
	$\frac{3}{16}$	66.4	33.2	19.4
$\frac{1}{8}$	$\frac{1}{64}$	203	102	59.3
	$\frac{1}{32}$	156	78.2	45.6
	$\frac{1}{16}$	110	55.0	32.0
	$\frac{3}{32}$	88.8	44.4	25.9
	$\frac{1}{8}$	76.2	38.1	22.3
	$\frac{3}{16}$	60.9	30.4	17.8
$\frac{3}{16}$	$\frac{1}{64}$	181	90.6	52.9
	$\frac{1}{32}$	137	68.5	40.0
	$\frac{1}{16}$	97.7	48.9	28.5
	$\frac{3}{32}$	78.0	39.0	22.8
	$\frac{1}{8}$	67.5	33.7	19.7
	$\frac{3}{16}$	54.2	27.1	15.8
$\frac{1}{4}$	$\frac{1}{64}$	167	83.6	48.8
	$\frac{1}{32}$	126	63.2	36.9
	$\frac{1}{16}$	90.8	45.4	26.3
	$\frac{3}{32}$	72.7	36.3	21.2
	$\frac{1}{8}$	62.7	31.3	18.3
$\frac{3}{8}$	$\frac{1}{64}$	150	75.0	43.8
	$\frac{1}{32}$	113	56.7	33.1
	$\frac{1}{16}$	81.0	40.5	23.6
	$\frac{3}{32}$	65.5	32.7	19.1

Standard $\frac{5}{8}$ inch Tool

$\frac{3}{32}$	$\frac{1}{64}$	216	108	63.0
	$\frac{1}{32}$	160	80.0	46.6
	$\frac{1}{16}$	110	55.0	32.2
	$\frac{3}{32}$	88.4	44.2	25.8
	$\frac{1}{8}$	75.4	37.7	22.0
$\frac{1}{8}$	$\frac{1}{64}$	200	100	58.6
	$\frac{1}{32}$	148	74.0	43.3
	$\frac{1}{16}$	104	51.8	30.2
	$\frac{3}{32}$	82.0	41.3	24.1
	$\frac{1}{8}$	69.6	34.8	20.3
$\frac{3}{16}$	$\frac{1}{64}$	183	91.6	68.0
	$\frac{1}{32}$	135	67.5	39.4
	$\frac{1}{16}$	94.0	47.0	27.4
	$\frac{3}{32}$	75.4	37.7	22.0
	$\frac{1}{8}$	64.3	32.2	18.8
$\frac{1}{4}$	$\frac{1}{64}$	171	85.7	50.1
	$\frac{1}{32}$	126	63.2	36.9
	$\frac{1}{16}$	87.8	43.9	25.6
	$\frac{3}{32}$	70.4	35.2	20.6
$\frac{3}{8}$	$\frac{1}{64}$	156	77.8	45.4
	$\frac{1}{32}$	116	57.8	33.8
	$\frac{1}{16}$	79.7	39.9	23.3

Standard $\frac{1}{2}$ inch Tool

$\frac{3}{32}$	$\frac{1}{64}$	206	103	60.0
	$\frac{1}{32}$	147	73.3	42.8
	$\frac{1}{16}$	97.5	48.8	28.5
	$\frac{3}{32}$	76.0	38.0	22.2
	$\frac{1}{8}$	64.1	32.1	18.7
$\frac{1}{8}$	$\frac{1}{64}$	194	97.0	56.7
	$\frac{1}{32}$	138	69.3	40.4
	$\frac{1}{16}$	93.1	46.5	27.2
	$\frac{3}{32}$	72.1	36.1	21.3
	$\frac{1}{8}$	41.8	20.9	12.2
$\frac{3}{16}$	$\frac{1}{64}$	182	91.0	53.0
	$\frac{1}{32}$	128	64.0	37.7
	$\frac{1}{16}$	86.1	43.1	25.1
	$\frac{3}{32}$	67.4	33.7	19.6
$\frac{1}{4}$	$\frac{1}{64}$	173	86.3	50.4
	$\frac{1}{32}$	122	61.0	35.7
	$\frac{1}{16}$	81.9	41.0	23.9

CHAPTER VI

STRAIGHT AND CIRCULAR FORMING TOOLS

Almost every machinist who is engaged in tool work will have more or less to do with the making of forming tools. These may be used for shaping sheet metals, or for use under the drop hammer, or again, they may be employed in the lathe, planer, shaper, or milling machine. It is the object in the present chapter, however, to confine ourselves to a description of the straight and circular forming tools that are so universally used on screw machines. For certain purposes these tools need not be of a very exact nature, while, again, they require great accuracy in their construction when they are to be used for the manufacture of interchangeable parts. As the old saying goes: "It is easy enough to make one alike," but when it is necessary to make duplicate tools it is quite a difficult task.

While there are numerous methods employed for making these tools,

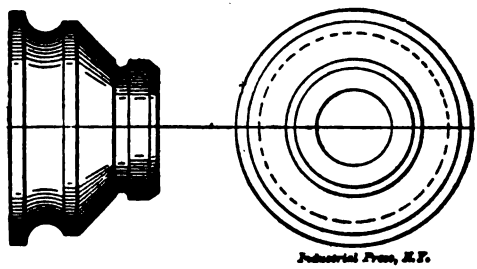

Fig. 51. Piece of Work to be Made

but little has ever been written in a way which will enable the machinist to compute the distances, diameters, or angles so as to produce the required dimensions on the finished work. If, for instance, a circular tool is to produce certain diameters on the work, and we transfer the exact ratio of these different diameters from the drawing to the forming tool, we will not be able to get the required dimensions when the cutting edge of the tool is one-quarter of an inch below the center. If we have to make a straight forming tool which, in the machine, is to stand at an angle of 15 degrees, we can, when it is not very wide, avail ourselves of the use of a master forming tool. When, however, the tool is very wide, so that the use of the master tool is unpractical, and it is necessary to mill or plane it to shape, some computation is then necessary in order to make the shape such that it will produce the required dimensions on the work when the tool is held at an angle in the machine.

Making Straight Forming Tools*

We will first consider a method of making straight forming tools which has proved satisfactory and will produce accurate results if

* MACHINERY, June, 1904.

properly manipulated. We will suppose that we are called upon to make the tools for producing with accuracy such a piece of work as shown in Fig. 51, and that a master former is to be made so that at any future time the forming tool can be duplicated at small expense. The master former will be made as in Fig. 52, being an accurate duplicate of our model with the addition of a shank about an inch and a half in length on each end, these shanks serving as an arbor for the tool.

The formed part is then milled down to the center, to produce a cutting face for future operations, after which it is hardened, tempered and the face accurately ground. To facilitate this face grinding the fixture shown in Fig. 53 is employed, the work being done on a surface grinder. The most essential point to be observed in grinding such a former is to have the cutting face radial, and this is accomplished by the use of this fixture. The fixture is placed on the grinder so that the line of centers is at right angles with the emery wheel; the center *c* is removed from the block *d*, and the emery wheel is

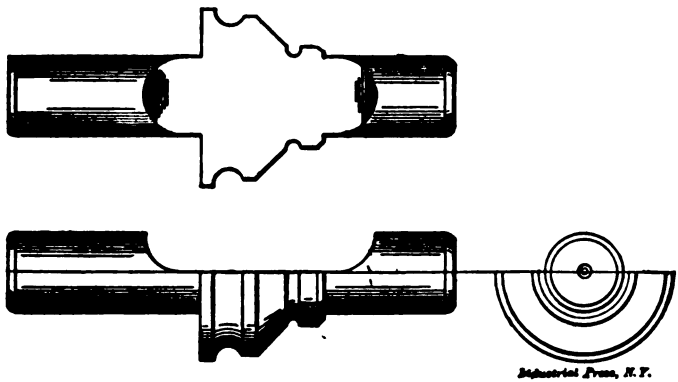

Fig. 52. Master Former

brought to bear on the ball *b*, which is a running fit in the lever *a*. This lever is fulcrumed on the block *d* and is held upward by means of a spring attached to the short arm. With the emery wheel at rest, the table of the grinder is now run back and forth and the wheel fed downward until it reaches such a position that when it passes over the ball *b*, the front end of the lever will indicate zero. This shows the operator that the periphery of the wheel is in perfect alignment with the center of the fixture. The center *c* is then replaced and the master former, with dog attached, is placed between the centers and ground. By the use of the handle *e*, which engages the knurled head of the adjustable center, the former is turned slightly after each cut across the face until a keen cutting edge on the same is obtained.

The block from which the forming tool is to be made is placed in the vise of the milling machine and roughed out as near to the formed shape as possible, after which the master former is substituted for the milling cutter, as shown in Fig. 54. The cutting face must stand

at the same angle with the perpendicular as the forming tool is to stand when placed in the screw machine, and it is very essential to observe this point if accurate results are desired. When the proper angle of the former has been obtained, it is secured in position by a wooden wedge tapped in between the cone and the frame of the milling

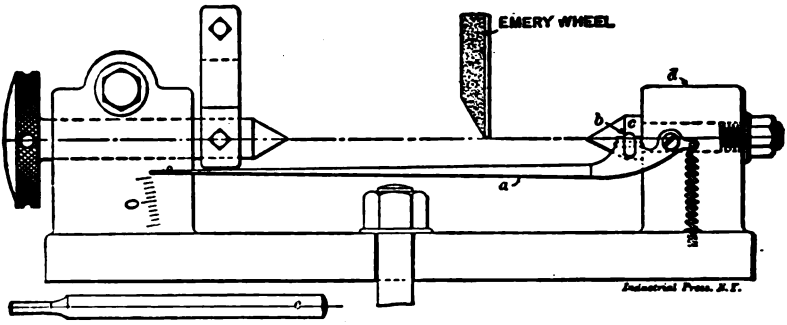

Fig. 53. Device for Grinding Master Former

machine, and the table is then run back and forth until the forming tool is cut to the desired shape.

Use of Second Master Former

If an extra long forming tool is required, say eight or nine inches in length, and it is desired to prolong the life of the master former, we would then make use of a second master former, constructed as previously described for the forming tool. This second master former

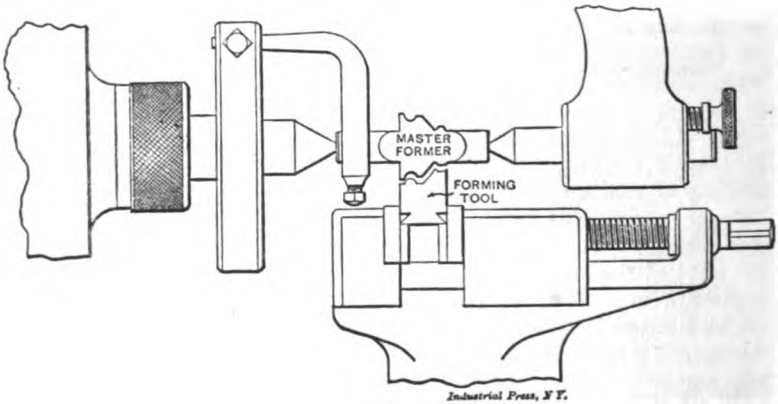

Fig. 54. Making the Forming Tool from the Master Former

fits into a holder, as shown in Fig. 55, and when it is being formed should be held at right angles with the bed of the machine. It is then necessary to make a similar piece to be used for making the working formers. To avoid confusion we will call this first piece No. 1 and the next piece to be made No. 2. This second piece must have the form of No. 1 transferred to it and for this purpose it is

placed in the block shown in Fig. 56, which holds it at an angle of 10 degrees with the shaper vise. Piece No. 1, in its holder, is placed in the toolpost of the shaper where a tapered block holds it at a corresponding angle with piece No. 2, so that their faces are in line, as shown in Fig 57. By locating these pieces in this way the form of No. 1 can be accurately transferred to No. 2, at the same time giving No. 2 the required clearance so that it can then be held squarely in the shaper toolpost and used to shape the forming tools that are held in the shaper vise at an angle of 10 degrees.

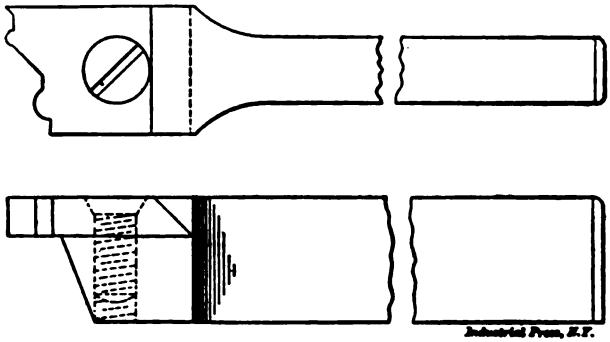

Fig. 55. Second Master Former and Holder

To make this last method clear we must bear in mind that at whatever angle the forming tool stands when in the screw machine, this angle must be maintained for setting the face of the master former. This transfers the form to No. 1 and overcomes the discrepancy caused by the tool standing at an angle in the screw machine, and this when in turn transferred to No. 2 gives it the clearance required and the exact shape of No. 1.

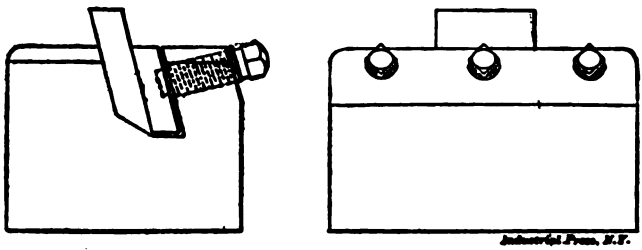

Fig. 56. Method of Holding Forming Tool while Shaping

There are numerous other methods in use for accomplishing this class of work and some, no doubt, may be simpler, but they do not yield such accurate results. One of these methods consists in filing a templet to fit the model and from this making the shaping tool, which in turn is placed in the shaper with the face standing at the same angle as will the forming tool when placed in the screw machine. Then the forming tool blank is put in the vise and shaped up in the usual way.

Making Concave Forming Tools in the Milling Machine*

Fig. 58 illustrates a very interesting method of making a concave forming tool such as is used for backing off convex milling cutters. This tool has, of course, the same shape for its entire depth so that it may be ground and reground without changing its original form.

In Fig. 58, *B* represents the tool which is held in the holder *A* at an angle of 76 degrees with the table of the milling machine, this giving to the tool the proper cutting clearance. The first thing to be done, after placing the tool in the holder, is to mill off the top of the tool so that it will be parallel with the table of the machine. A semi-

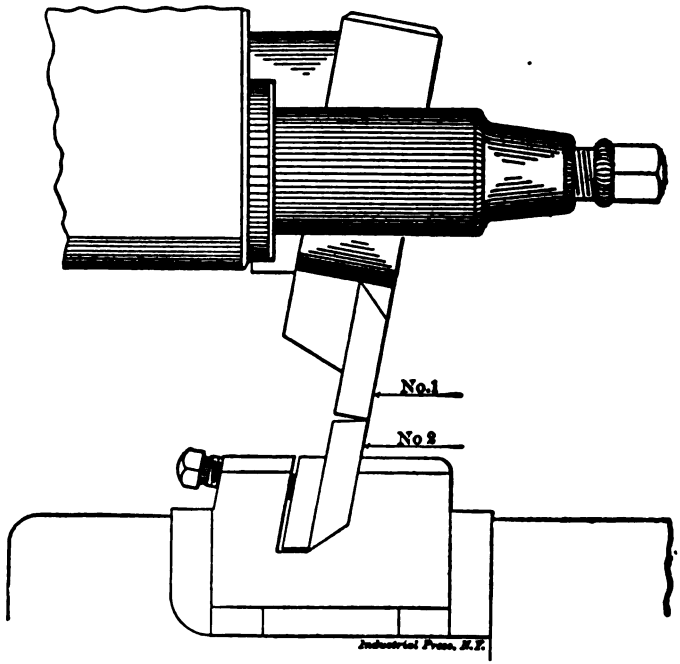

Fig. 57. Method of Holding Second Master Former in Shaper

circle of the desired radius is then drawn on the back of the tool, and with any cutter that is at hand, it is milled nearly to the mark, care being taken not to go below it. For finishing the cutter, a plug, *C*, is made, the end being hardened and ground in a surface grinder. This plug is held in a special holder, *D*, which fits the spindle of the milling machine, and when it is set so that its axis is perpendicular to the tool, the spindle of the machine is firmly locked. Some machines are now being built with provision for locking the spindle, but if not so made the same result may be accomplished by driving wedges under the cone pulley. Now, by moving the platen of the machine backward and forward by hand, the plug can be made to cut a perfect semi-circle in the tool.

* MACHINERY, December, 1903.

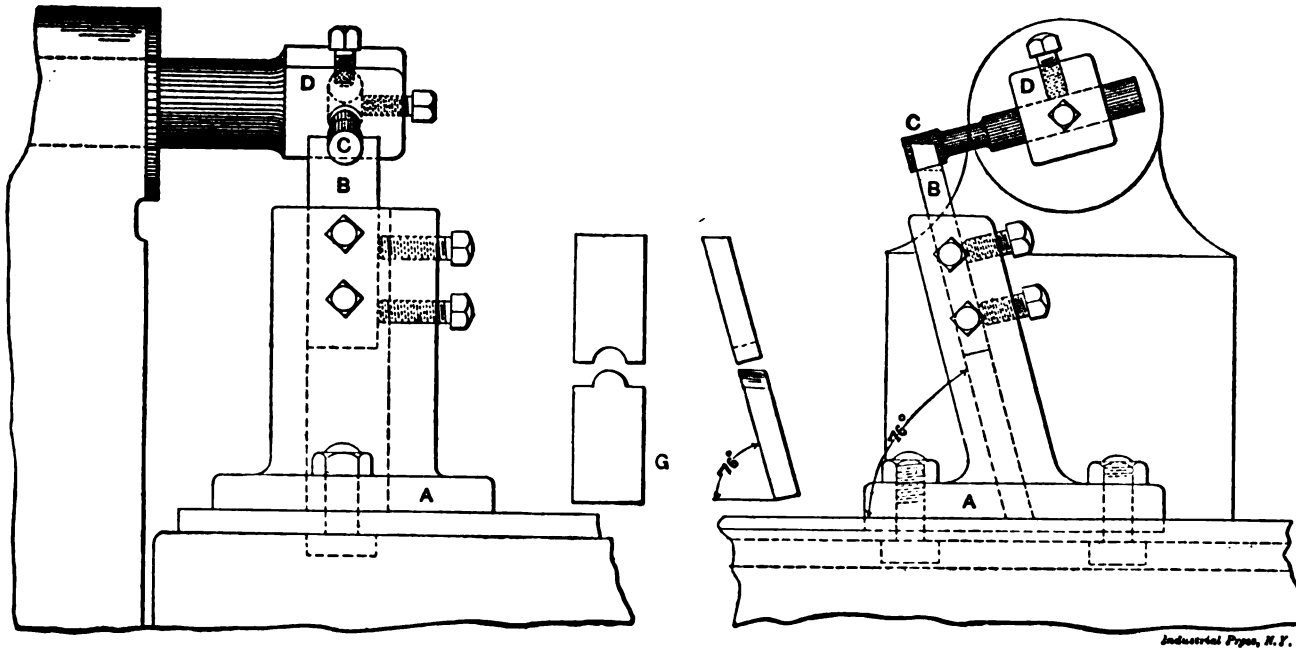

Fig. 58. Making a Concave Forming Tool in the Milling Machine

It is good practice to plane a little below half of the diameter of the plug, thus allowing some stock to be ground off after the tool is hardened. In hardening, these tools usually come out very satisfactorily, but, if any distortion takes place, it will be from the sides, and may be readily remedied by a little stoning. By using the concave tool for a planing tool, as shown in the sketch at *G*, a convex tool may be formed, but in doing so care should be taken that both tools stand at an angle of 76 degrees with the bed of the machine. This shape of tool would be used for backing off a concave cutter. The description of this method was contributed to MACHINERY, December, 1903, by J. J. Lynskey.

Computing Dimensions for Forming Tools*

The foregoing methods have all been based upon the duplication of the formers by mechanical means, but we will now consider other methods in which the dimensions of the formed tool are computed from the ratios of the different diameters on the work. We have already made it clear that an error will exist if we transfer to the tool the exact differences in the various radii on the work, and it is to overcome this error that we subtract from the dimensions of the work such differences as are caused by the tool standing at an angle in the machine.

As will be readily seen in the figure at the head of Table No. 1, the line $a\,c$ is always longer than $b\,c$, and as $a\,c$ must be equal to the difference between two radii on the work, $b\,c$ will consequently equal $a\,c \times$ cosine of the angle at which the tool is to rest in the machine. Table No. 1 is arranged to facilitate the computation of the tool dimensions to give required dimensions on the work. In the first column is given the distance $a\,c$, or the actual cutting distance; and the second, third and fourth columns give corresponding distances $b\,c$ when the tool is to stand at an angle of ten, fifteen or twenty degrees in the machine.

To illustrate the use of this table we will take as an example the piece shown in Fig. 59, the respective diameters of which are 1.75 inch, 0.75 inch and 1.25 inch. We will first reduce these diameters to their respective radii, which equal 0.875, 0.375 and 0.625. Now the difference between the first and the second is 0.500, which would equal the actual cutting edge on the tool, or $a\,c$. Referring to our table we find in the first column our distance $a\,c = 0.500$, and if the tool is to set at an angle of 15 degrees we find our corresponding value for $b\,c$ in the third column; $b\,c = 0.482965$. In the same way we find our second step which, for a difference in radii of 0.25, equals $0.193186 + 0.048297 = 0.241483$. If we then plane our forming tool so that the steps will measure 0.4830 and 0.2415 respectively, when this tool is placed in the machine with the cutting face perfectly central with the work, and the front face at an angle of 15 degrees, the diameters turned will correspond to those in the sketch.

It often happens that an angle is to be turned upon the piece and this angle will naturally change when the tool is placed at an angle.

* MACHINERY, June, 1904.

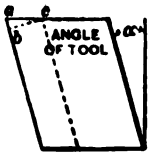

TABLE NO. 1. USED IN MAKING STRAIGHT FORMING TOOLS

$a\,c$ = Actual Cutting Distance.	$b\,c$ Angle of Tool 10°	$b\,c$ Angle of Tool 15°	$b\,c$ Angle of Tool 20°
.001	.000985	.000986	.000940
.002	.001970	.001983	.001879
.003	.002954	.002898	.002819
.004	.003939	.003864	.003759
.005	.004924	.004830	.004699
.006	.005909	.005796	.005638
.007	.006894	.006762	.006578
.008	.007878	.007727	.007518
.009	.008863	.008693	.008457
.010	.009848	.009659	.009397
.020	.019696	.019319	.018794
.030	.029544	.028978	.028191
.040	.039392	.038637	.037588
.050	.049241	.048297	.046985
.060	.059089	.057956	.056381
.070	.068937	.067615	.065778
.080	.078785	.077274	.075175
.090	.088633	.086934	.084572
.100	.098481	.096593	.093969
.200	.196962	.193186	.187938
.300	.295443	.289779	.281907
.400	.393924	.386372	.375876
.500	.492405	.482965	.469845

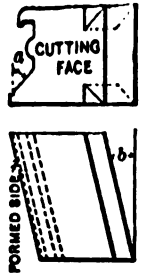

TABLE NO. 2. COMPUTED ANGLES ON STRAIGHT FORMING TOOLS

a = Angle on Cutting Face of Forming Tool.	Angle Measured on Formed Side, which coincides with Angle A on Cutting Face, when Forming Tool stands at 10, 15 or 20 degrees from Perpendicular.		
	b = 10 degrees.	b = 15 degrees.	b = 20 degrees.
5°	4° — 55′	4° — 50′	4° — 42′
10	9 — 51	9 — 40	9 — 24
15	14 — 47	14 — 31	14 — 06
20	19 — 43	19 — 23	18 — 53
25	24 — 40	24 — 15	23 — 40
30	29 — 37	29 — 09	28 — 29
35	34 — 35	34 — 04	33 — 20
40	39 — 34	39 — 01	38 — 15
45	44 — 34	44 — 00	43 — 13
50	49 — 34	49 — 01	48 — 14
55	54 — 35	54 — 04	53 — 18
60	59 — 37	59 — 08	58 — 26
65	64 — 40	64 — 14	63 — 36
70	69 — 43	69 — 21	68 — 50
75	74 — 47	74 — 30	74 — 5
80	79 — 51	79 — 39	79 — 22
85	84 — 55	84 — 49	84 — 41

Table No. 2 has therefore been computed to give the angle that is to be made on the tool for obtaining a required angle on the work. The angles given are measured from the center line of the piece or, what is the same thing, with the formed face of the tool. Thus in Fig. 59 we have an angle of 45 degrees, and as the forming tool will rest at an angle of 15 degrees in the machine, we refer to the third column of Table No. 2, where we find 44 degrees as the proper angle for the tool, and if the tool is made to this angle it will cut the work to the 45 degrees required. The angular difference, as will be seen, is the

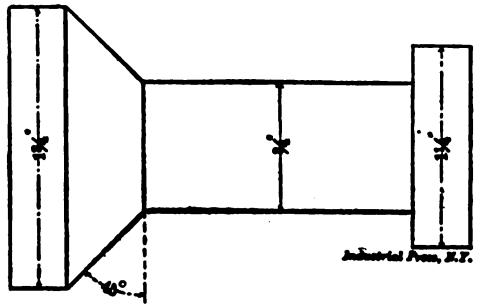

Fig. 59. Example of Work for which Forming Tool Dimensions are to be Computed

greatest at 45 degrees, from which it decreases at about the same rate toward zero and 90 degrees.

Circular Forming Tools

Circular forming tools are used in the same capacity as straight ones, and to make them accurately entails quite a little computation. Whenever a circular tool has two or more diameters a discrepancy will exist between the different diameters on the tool and on the

OC = Radius of forming tool.
OB = Second radius of forming tool.
OA = Distance from center to cutting face of tool.
$AB = \sqrt{OB^2 - OA^2}$
$BC = \sqrt{(OC^2 - OA^2)} - \sqrt{(OB^2 - OA^2)}$

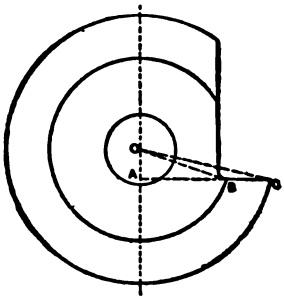

Fig. 60. Formulas for Circular Forming Tools

work, if the cutting face is below the center of the tool. In Fig. 60 are given the formulas necessary for calculating the diameters of circular forming tools, and Table No. 3 has been computed to show the discrepancies and to assist in determining the proper diameters of formed tools to give required diameters on the work. The first and second columns give the diameters and radii respectively of the formed tools, while the third column gives the distance from the vertical

TABLE NO. 3. FOR COMPUTING DIAMETERS OF CIRCULAR FORMING TOOLS

Diameter of Tool = 2 O C	Radius of Tool = O C	Cutting Face 1/16" below Center.				Cutting Face 1/8" below Center.				Cutting Face 1/4" below Center.				Cutting Face 1/16" below Center.			
		A C	Correction for 1/16" Difference in Diameter.	Correction for 1/8" Difference in Diameter.	Correction for 1/4" Difference in Diameter.	A C	Correction for 1/16" Difference in Diameter.	Correction for 1/8" Difference in Diameter.	Correction for 1/4" Difference in Diameter.	A C	Correction for 1/16" Difference in Diameter.	Correction for 1/8" Difference in Diameter.	Correction for 1/4" Difference in Diameter.	A C	Correction for 1/16" Difference in Diameter.	Correction for 1/8" Difference in Diameter.	Correction for 1/4" Difference in Diameter.
1	.500	.48412	.....	.....	.....	.46351	.....	.....	.....	.43301	.....	.....	.....	.39031	.....	.....	.....
1 1/8	.5625	.54843	.00362	.....	.....	.53033	.00864	.....	.....	.50389	.01676	.....	.....	.46771	.02980	.....	.....
1 1/4	.625	.61237	.00288	.00650	.....	.59621	.00676	.01540	.....	.57282	.01286	.02962	.....	.54126	.02210	.05190	.....
1 3/8	.6875	.67604	.00234	.....	.....	.66143	.00544	.....	.....	.64044	.01024	.....	.....	.61237	.01722	.....	.....
1 1/2	.750	.73951	.00194	.00428	.01078	.72618	.00450	.00994	.02534	.70710	.00832	.01856	.04818	.68179	.01384	.03106	.08296
1 5/8	.8125	.80282	.00162	.....	.....	.79056	.00376	.....	.....	.77308	.00696	.....	.....	.75000	.01142	.....	.....
1 3/4	.875	.86602	.00140	.00302	.....	.85467	.00322	.00698	.....	.83852	.00588	.01284	.....	.81729	.00958	.02100	.....
1 7/8	.9375	.92112	.00120	.....	.....	.91855	.00276	.....	.....	.90355	.00506	.....	.....	.88388	.00818	.....	.....
2	1.000	.99215	.00106	.00226	.00528	.98226	.00242	.00518	.01216	.96825	.00440	.00946	.02230	.94991	.00706	.01524	.03624
2 1/8	1.0625	1.05512	.00094	.....	.....	1.04582	.00212	.....	.....	1.03267	.00384	.....	.....	1.01550	.00618	.....	.....
2 1/4	1.125	1.11803	.00082	.00176	.....	1.10926	.00188	.00400	.....	1.09687	.00340	.00724	.....	1.08072	.00544	.01162	.....
2 3/8	1.1875	1.18090	.00074	.....	.....	1.17260	.00168	.....	.....	1.16086	.00294	.....	.....	1.14564	.00484	.....	.....
2 1/2	1.250	1.24370	.00066	.00140	.00316	1.23580	.00150	.00318	.00718	1.22475	.00278	.00572	.01296	1.21032	.00436	.00920	.02082
2 5/8	1.3125	1.30653	.00060	.....	.....	1.29904	.00138	.....	.....	1.28847	.00244	.....	.....	1.27475	.00386	.....	.....
2 3/4	1.375	1.36930	.00054	.00114	.....	1.36215	.00122	.00260	.....	1.35208	.00222	.00466	.....	1.33901	.00352	.00788	.....
2 7/8	1.4375	1.43205	.00050	.....	.....	1.42521	.00112	.....	.....	1.41559	.00202	.....	.....	1.40312	.00322	.....	.....
3	1.500	1.49478	.00046	.00096	.00210	1.48823	.00104	.00216	.00476	1.47902	.00186	.00388	.00854	1.46708	.00292	.00614	.01352
3 1/8	1.5625	1.55749	.00042	.....	.....	1.55120	.00094	.....	.....	1.54237	.00170	.....	.....	1.53093	.00270	.....	.....
3 1/4	1.625	1.62018	.00038	.00080	.....	1.61414	.00088	.00182	.....	1.60565	.00156	.00326	.....	1.59466	.00246	.00516	.....
3 3/8	1.6875	1.68286	.00036	.....	.....	1.67705	.00082	.....	.....	1.66883	.00144	.....	.....	1.65831	.00230	.....	.....
3 1/2	1.750	1.74553	.00034	.00070	.00150	1.73992	.00074	.00156	.00338	1.73205	.00136	.00280	.00606	1.72187	.00212	.00442	.00958
3 5/8	1.8125	1.80818	.00032	.....	.....	1.80277	.00070	.....	.....	1.79518	.00126	.....	.....	1.78535	.00196	.....	.....
3 3/4	1.875	1.87082	.00028	.00060	.....	1.86560	.00066	.00136	.....	1.85826	.00116	.00242	.....	1.84877	.00186	.00382	.....
3 7/8	1.9375	1.93346	.00026	.....	.....	1.92840	.00060	.....	.....	1.92130	.00108	.....	.....	1.91213	.00172	.....	.....
4	2.000	1.99608	.00024	.00050	.00100	1.99119	.00058	.00118	.00254	1.98431	.00102	.00210	.00452	1.97543	.00160	.00332	.00714

center line of the tool to the cutting edge when the cutting face is ⅛ inch below the horizontal center line. The following three columns give the constants that are to be used in computing the various diameters of the forming tools when the cutting face is ⅛ inch below the horizontal center line, as will be made clear in the example following. In the remaining columns are tabulated similar values as these, for use when the cutting face of the tool is 3/16, 1/4, and 5/16 inch below the horizontal center line of the tool. As there is no standard distance for the location of the cutting face, the table has accordingly been prepared to correspond with such distances as are most commonly used.

As an example illustrating the use of these tables we will consider that we are to make a circular forming tool for the piece shown in Fig. 59, and that the largest diameter of the tool is to be 3 inches, and its cutting face ¼ inch below the horizontal center line. The first step will be to determine approximately the respective diameters of the forming tool and then to correct them by the use of the tables.

The diameters of the piece are 1.750, 0.750 and 1.250 respectively,

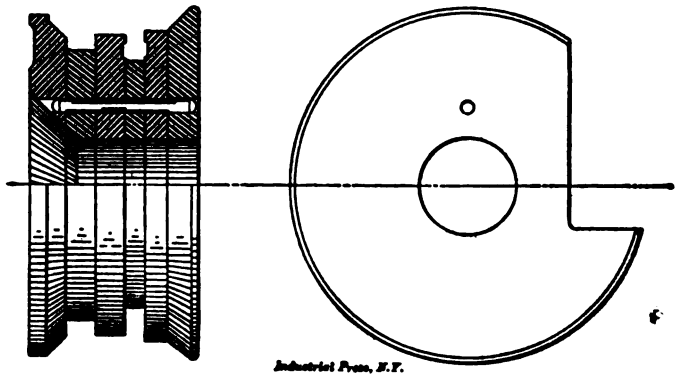

Fig. 61. Forming Tool Built up of Sections

and to produce these with a 3-inch cutter the diameters of the tool would be approximately 2.000, 3.000, and 2.500 inches respectively. The first dimension, 2.000, is 1.000 inch in diameter less than that of the tool, and for the correction we would look in the column of differences for inches, but as the tables are only extended to half inches we will be obliged to obtain our correction in two steps. On the line for 3-inch diameter, and under corrections for ½ inch, we find 0.00854; and then on line of 2½ and under the same heading, we find 0.01296, consequently our total correction would be $0.00854 + 0.01296 = 0.02150$. This correction is added to the approximate diameter, making the exact diameter of our first step $2.000 + 0.02150 = 2.02150$ inches. Our next step would be computed in the same way by noting on the 3-inch line the correction for ½ inch and adding it to the approximated diameter of our second step, giving us an exact diameter of $2.500 + 0.00854 = 2.50854$. Thus our tool, to produce the

piece shown in the example, would have three steps of 3.000, 2.0215, and 2.5085 inches, respectively, if it is to have its cutting face ¼ inch below center. All diameters are computed in this way, from the largest or fixed diameter of the tool.

In conclusion, attention should be called to the formed tool, illustrated in Fig. 61, which is made in sections so that all diameters, sides, and angles can be easily ground after the tool is hardened. This

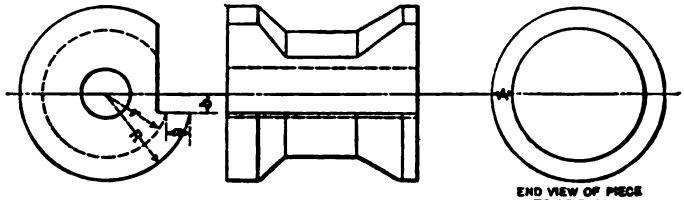

Fig. 62. Forming Tool and End View of Work

design is of especial value when such tools are made from high-speed steel, as the finished surfaces are likely to be roughened by the high heat that is necessary for hardening.

Formulas for Circular Forming Tools*

The formulas required for circular forming tools may, perhaps, be expressed somewhat simpler than has been previously done in this chapter. Assume in Fig. 62, for instance, that the distance A in the piece to be formed equals the distance a on the forming tool, but as

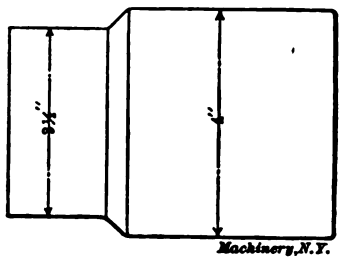

Fig. 63. Piece to be Formed

this latter distance is measured in a plane a certain distance b below the horizontal plane through the center of the forming tool, it is evident that the differences of diameter in the tool and the piece to be formed are not the same. A general formula may, however, be deduced by use of elementary geometry by means of which the various diameters of the forming tool may be determined if the largest (or smallest) diameter of the tool, the amount that the cutting edge is below the center, and, of course, the diameters of the piece to be formed, are known.

If R = largest radius of the tool,

a = difference in radii of steps in the work, and

* MACHINERY, January, 1908.

b = amount cutting edge is below center,

then, if r be the radius looked for,

$$r = \sqrt{(\sqrt{R^2 - b^2} - a)^2 + b^2}$$

If the smaller radius r is given and the larger radius R sought, the formula takes the form:

$$R = \sqrt{(\sqrt{r^2 - b^2} + a)^2 + b^2}$$

Suppose, for an example, that a tool is to be made to form the piece in Fig. 63. Assume that the largest diameter of the tool is to be 3

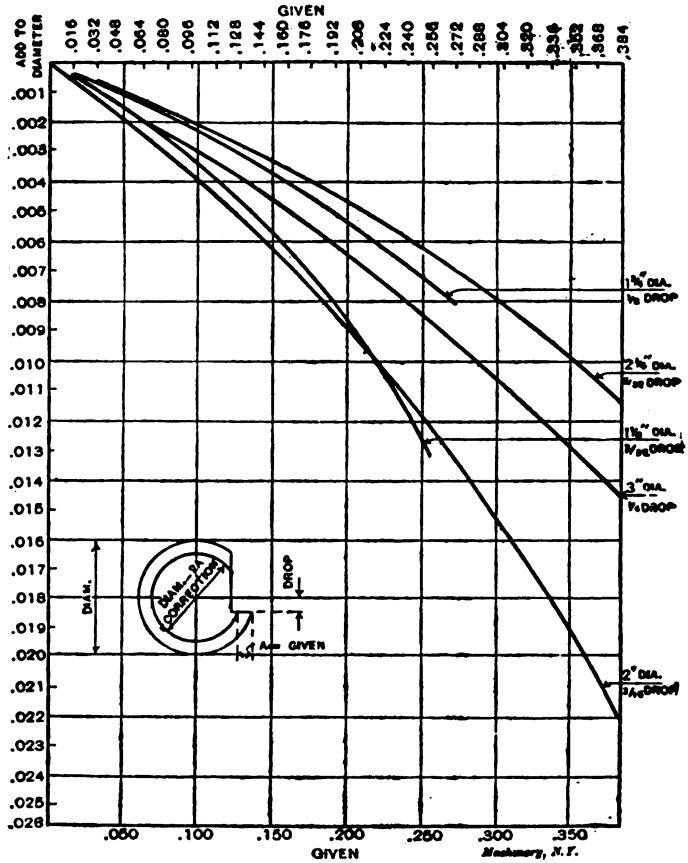

Fig. 64. Diagram for Circular Forming Tools

inches, and that the cutting edge is to be ¼ inch below the center of the tool. Then the diameter next smaller to 3 inches is found from the formulas given by inserting the given values: $R = 1\frac{1}{2}$ inch, $b = \frac{1}{4}$ inch, and $a = \frac{1}{4}$ inch (half the difference between 4 and 3½ inches; see Fig. 63).

Then

$$r = \sqrt{(\sqrt{(1\tfrac{1}{2})^2-(\tfrac{1}{4})^2}-\tfrac{1}{4})^2+(\tfrac{1}{4})^2} = \sqrt{(\sqrt{\tfrac{35}{16}}-\tfrac{1}{4})^2+\tfrac{1}{16}} = \frac{5.017}{4}$$

$= 1.254$ inch.

While the formula looks complicated, by means of a table of squares the calculations are easily simplified and can be carried out in three or four minutes. The value of r being 1.254 inch, the diameter to make the smaller step of the forming tool will be 2.508 inches, instead of 2½

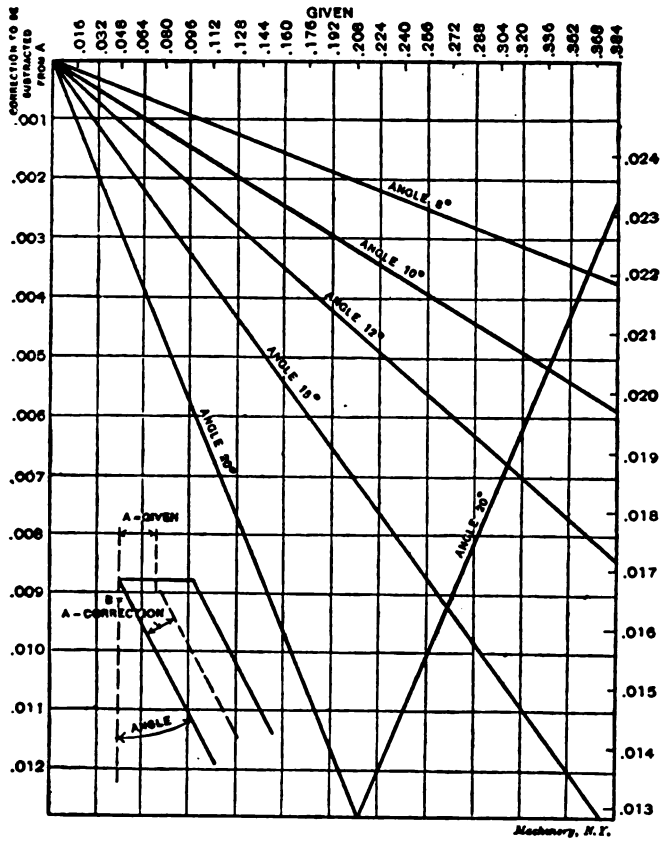

Fig. 65. Diagram for Straight Forming Tools

inches exact, as would have been the case if the cutting edge had been on the center line.

Charts for Dimensions of Forming Tools*

The charts in Figs. 64 and 65 have been computed for the same purpose as the tables just explained, and the various curves and lines thereon are made to correspond to what is generally used. An illus-

* MACHINERY, October, 1904.

tration of their use will offer the best way of explaining them. Referring to Chart Fig. 64, the distance *A* (see cut) thereon is calculated from whatever the piece is we have to make. Under the word "Given," at the top and bottom of the chart, locate *A*, and follow down (or up) the vertical line until it intersects the proper curve. This point, carried to the right by the horizontal line, will indicate the correction to be added to the diameter, after subtracting 2*A*, of course. The horizontal divisions for the verticals vary by 0.016 inch and the corrections read to 0.001 inch which for practical use is as near as required. The same illustration will answer for Chart Fig. 65; in this the correction is carried around to the right of chart for larger values.

The Chart Fig. 64 shows only five curves, and there is no question but what there are many other standards so it is quite impossible to make a complete chart or table. Unless we know all standards, however, it is best to avoid useless calculations.

No. 39. Fans, Ventilation and Heating.—Fans; Heaters; Shop Heating.

No. 40. Fly-Wheels.—Their Purpose, Calculation and Design.

No. 41. Jigs and Fixtures, Part I.—Principles of Jig and Fixture Design; Drill and Boring Jig Bushings; Locating Points; Clamping Devices.

No. 42. Jigs and Fixtures, Part II.—Open and Closed Drill Jigs.

No. 43. Jigs and Fixtures, Part III.—Boring and Milling Fixtures.

No. 44. Machine Blacksmithing.—Systems, Tools and Machines used.

No. 45. Drop Forging.—Lay-out of Plant; Methods of Drop Forging; Dies.

No. 46. Hardening and Tempering.—Hardening Plants; Treating High-Speed Steel; Hardening Gages.

No. 47. Electric Overhead Cranes.—Design and Calculation.

No. 48. Files and Filing.—Types of Files; Using and Making Files.

No. 49. Girders for Electric Overhead Cranes.

No. 50. Principles and Practice of Assembling Machine Tools, Part I.

No. 51. Principles and Practice of Assembling Machine Tools, Part II.

No. 52. Advanced Shop Arithmetic for the Machinist.

No. 53. Use of Logarithms and Logarithmic Tables.

No. 54. Solution of Triangles, Part I.—Methods, Rules and Examples.

No. 55. Solution of Triangles, Part II.—Tables of Natural Functions.

No. 56. Ball Bearings.—Principles of Design and Construction.

No. 57. Metal Spinning.—Machines, Tools and Methods Used.

No. 58. Helical and Elliptic Springs.—Calculation and Design.

No. 59. Machines, Tools and Methods of Automobile Manufacture.

No. 60. Construction and Manufacture of Automobiles.

No. 61. Blacksmith Shop Practice.—Model Blacksmith Shop; Welding; Forging of Hooks and Chains; Miscellaneous Appliances and Methods.

No. 62. Hardness and Durability Testing of Metals.

No. 63. Heat Treatment of Steel.—Hardening, Tempering, Case-Hardening.

No. 64. Gage Making and Lapping.

No. 65. Formulas and Constants for Gas Engine Design.

No. 66. Heating and Ventilation of Shops and Offices.

No. 67. Boilers.

No. 68. Boiler Furnaces and Chimneys.

No. 69. Feed Water Appliances.

No. 70. Steam Engines.

No. 71 Steam Turbines.

No. 72 Pumps, Condensers, Steam and Water Piping.

No. 73. Principles and Applications of Electricity, Part I.—Static Electricity; Electrical Measurements; Batteries.

No. 74. Principles and Applications of Electricity, Part II.—Magnetism; Electro-Magnetism; Electro-Plating.

No. 75. Principles and Applications of Electricity, Part III.—Dynamos; Motors; Electric Railways.

No. 76. Principles and Applications of Electricity, Part IV.—Electric Lighting.

No. 77. Principles and Applications of Electricity, Part V.—Telegraph and Telephone.

No. 78. Principles and Applications of Electricity, Part VI.—Transmission of Power.

No. 79. Locomotive Building, Part I.—Main and Side Rods.

No. 80. Locomotive Building, Part II.—Wheels; Axles; Driving Boxes.

No. 81. Locomotive Building, Part III.—Cylinders and Frames.

No. 82. Locomotive Building, Part IV.—Valve Motion.

No. 83. Locomotive Building, Part V—Boiler Shop Practice.

No. 84. Locomotive Building, Part VI.—Erecting.

No. 85. Mechanical Drawing, Part I.—Instruments; Materials; Geometrical Problems.

No. 86. Mechanical Drawing, Part II.—Projection.

No. 87. Mechanical Drawing, Part III.—Machine Details.

No. 88. Mechanical Drawing, Part IV.—Machine Details.

No. 89. The Theory of Shrinkage and Forced Fits.

No. 90. Railway Repair Shop Practice

ADDITIONAL TITLES WILL BE ANNOUNCED IN MACHINERY FROM TIME TO TIME

MACHINERY'S DATA SHEET SERIES

MACHINERY'S Data Sheet Books include the well-known series of Data Sheets originated by MACHINERY, and issued monthly as supplements to the publication; of these Data Sheets over 500 have been published, and 6,000,000 copies sold. Revised and greatly amplified, they are now presented in book form, kindred subjects being grouped together. The purchaser may secure either the books on those subjects in which he is specially interested, or, if he pleases, the whole set at one time. The price of each book is 25 cents (one shilling) delivered anywhere in the world.

TITLES AND CONTENTS ON BACK COVER

CONTENTS OF DATA SHEET BOOKS

No. 1. Screw Threads.—United States, Whitworth, Sharp V- and British Association Standard Threads; Briggs Pipe Thread; Oil Well Casing Gages; Fire Hose Connections; Acme Thread; Worm Threads; Metric Threads; Machine, Wood, and Lag Screw Threads; Carriage Bolt Threads, etc.

No. 2. Screws, Bolts and Nuts.—Filister-head, Square-head, Headless, Collar-head and Hexagon-head Screws; Standard and Special Nuts; T-nuts, T-bolts and Washers; Thumb Screws and Nuts; A. L. A. M. Standard Screws and Nuts; Machine Screw Heads; Wood Screws; Tap Drills; Lock Nuts; Eye-bolts, etc.

No. 3. Taps and Dies.—Hand, Machine, Tapper and Machine Screw Taps; Taper Die Taps; Sellers Hobs; Screw Machine Taps; Straight and Taper Boiler Taps; Stay-bolt, Washout, and Patch-bolt Taps; Pipe Taps and Hobs; Solid Square, Round Adjustable and Spring Screw Threading Dies.

No. 4. Reamers, Sockets, Drills and Milling Cutters.—Hand Reamers; Shell Reamers and Arbors; Pipe Reamers; Taper Pins and Reamers; Brown & Sharpe, Morse and Jarno Taper Sockets and Reamers; Drills; Wire Gages; Milling Cutters; Setting Angles for Milling Teeth in End Mills and Angular Cutters, etc.

No. 5. Spur Gearing.—Diametral and Circular Pitch; Dimensions of Spur Gears; Tables of Pitch Diameters; Odontograph Tables; Rolling Mill Gearing; Strength of Spur Gears; Horsepower Transmitted by Cast-iron and Rawhide Pinions; Design of Spur Gears; Weight of Cast-iron Gears; Epicyclic Gearing.

No. 6. Bevel, Spiral and Worm Gearing.—Rules and Formulas for Bevel Gears; Strength of Bevel Gears; Design of Bevel Gears; Rules and Formulas for Spiral Gearing; Tables Facilitating Calculations; Diagram for Cutters for Spiral Gears; Rules and Formulas for Worm Gearing, etc.

No. 7. Shafting, Keys and Keyways.—Horsepower of Shafting; Diagrams and Tables for the Strength of Shafting; Forcing, Driving, Shrinking and Running Fits; Woodruff Keys; United States Navy Standard Keys; Gib Keys; Milling Keyways; Duplex Keys.

No. 8. Bearings, Couplings, Clutches, Crane Chain and Hooks.—Pillow Blocks; Babbitted Bearings; Ball and Roller Bearings; Clamp Couplings; Plate Couplings; Flange Couplings; Tooth Clutches; Crab Couplings; Cone Clutches; Universal Joints; Crane Chain; Chain Friction; Crane Hooks; Drum Scores.

No. 9. Springs, Slides and Machine Details.—Formulas and Tables for Spring Calculations; Machine Slides; Machine Handles and Levers; Collars; Hand Wheels; Pins and Cotters; Turn-buckles, etc.

No. 10. Motor Drive, Speeds and Feeds, Change Gearing, and Boring Bars.—Power required for Machine Tools; Cutting Speeds and Feeds for Carbon and High-speed Steel; Screw Machine Speeds and Feeds; Heat Treatment of High-speed Steel Tools; Taper Turning; Change Gearing for the Lathe; Boring Bars and Tools, etc.

No. 11. Milling Machine Indexing, Clamping Devices and Planer Jacks.—Tables for Milling Machine Indexing; Change Gears for Milling Spirals; Angles for setting Indexing Head when Milling Clutches; Jig Clamping Devices; Straps and Clamps; Planer Jacks.

No. 12. Pipe and Pipe Fittings.—Pipe Threads and Gages; Cast-iron Fittings; Bronze Fittings; Pipe Flanges; Pipe Bends; Pipe Clamps and Hangers; Dimensions of Pipe for Various Services, etc.

No. 13. Boilers and Chimneys.—Flue Spacing and Bracing for Boilers; Strength of Boiler Joints; Riveting; Boiler Setting; Chimneys.

No. 14. Locomotive and Railway Data.—Locomotive Boilers; Bearing Pressures for Locomotive Journals; Locomotive Classifications; Rail Sections; Frogs, Switches and Cross-overs; Tires; Tractive Force; Inertia of Trains; Brake Levers; Brake Rods, etc.

No. 15. Steam and Gas Engines.—Saturated Steam; Steam Pipe Sizes; Steam Engine Design; Volume of Cylinders; Stuffing Boxes; Setting Corliss Engine Valve Gears; Condenser and Air Pump Data; Horsepower of Gasoline Engines; Automobile Engine Crankshafts, etc.

No. 16. Mathematical Tables.—Squares of Mixed Numbers; Functions of Fractions; Circumference and Diameters of Circles; Tables for Spacing off Circles; Solution of Triangles; Formulas for Solving Regular Polygons; Geometrical Progression, etc.

No. 17. Mechanics and Strength of Materials.—Work; Energy; Centrifugal Force; Center of Gravity; Motion; Friction; Pendulum; Falling Bodies; Strength of Materials; Strength of Flat Plates; Ratio of Outside and Inside Radii of Thick Cylinders, etc.

No. 18. Beam Formulas and Structural Design.—Beam Formulas; Sectional Moduli of Structural Shapes; Beam Charts; Net Areas of Structural Angles; Rivet Spacing; Splices for Channels and I-beams; Stresses in Roof Trusses, etc.

No. 19. Belt, Rope and Chain Drives.—Dimensions of Pulleys; Weights of Pulleys; Horsepower of Belting; Belt Velocity; Angular Belt Drives; Horsepower transmitted by Ropes; Sheaves for Rope Drive; Bending Stresses in Wire Ropes; Sprockets for Link Chains; Formulas and Tables for Various Classes of Driving Chain.

No. 20. Wiring Diagrams, Heating and Ventilation, and Miscellaneous Tables.—Typical Motor Wiring Diagrams; Resistance of Round Copper Wire; Rubber Covered Cables; Current Densities for Various Contacts and Materials; Centrifugal Fan and Blower Capacities; Hot Water Main Capacities; Miscellaneous Tables: Decimal Equivalents, Metric Conversion Tables, Weights and Specific Gravity of Metals, Weights of Fillets, Drafting-room Conventions, etc.

MACHINERY, the monthly mechanical journal, originator of the Reference and Data Sheet Series, is published in four editions—the *Shop Edition*, $1.00 a year; the *Engineering Edition*, $2.00 a year; the *Railway Edition*, $2.00 a year, and the *Foreign Edition*, $3.00 a year.

The Industrial Press, Publishers of MACHINERY,
afayette Street, New York City, U. S. A.

Digitized by Google

MACHINERY'S REFERENCE SERIES

EACH NUMBER IS ONE UNIT IN A COMPLETE LIBRARY OF MACHINE DESIGN AND SHOP PRACTICE REVISED AND REPUBLISHED FROM MACHINERY

No. 8

A Dollar's Worth of Condensed Information

Working Drawings and Drafting-Room Kinks

THIRD EDITION—REVISED AND ENLARGED

Price 25 Cents

CONTENTS

Working Drawings, by LESTER G. FRENCH - - 3
Sizes of Working Drawings, by WILLIAM L. BREATH 20
Draftsmen's Tools - - - - - - - - 23
Drafting-Room Kinks - - - - - - - 37

The Industrial Press, 49-55 Lafayette Street, New York
Publishers of MACHINERY

COPYRIGHT, 1911, THE INDUSTRIAL PRESS, NEW YORK

MACHINERY'S REFERENCE SERIES

This treatise is one unit in a comprehensive Series of Reference books originated by MACHINERY, and including an indefinite number of compact units, each covering one subject thoroughly. The whole series comprises a complete working library of mechanical literature in which the Mechanical Engineer, the Master Mechanic, the Designer, the Machinist and Tool-maker will find the special information he wishes to secure, selected, carefully revised and condensed for him. The books are sold singly or in complete sets, as may be desired. The price of each book is 25 cents.

LIST OF REFERENCE BOOKS

No. 1. Worm Gearing.—Calculating Dimensions for Worm Gearing; Hobs for Worm Gears; Location of Pitch Circle; Self-Locking Worm Gearing, etc.

No. 2. Drafting-Room Practice.—Drafting-Room System; Tracing, Lettering and Mounting; Card Index Systems.

No. 3. Drill Jigs.—Elementary Principles of Drill Jigs; Drilling Jig Plates; Examples of Drill Jigs; Jig Bushings; Using Jigs to Best Advantage.

No. 4. Milling Fixtures.—Elementary Principles of Milling Fixtures; Collection of Examples of Milling Fixture Design, from practice.

No. 5. First Principles of Theoretical Mechanics.

No. 6. Punch and Die Work.—Principles of Punch and Die Work; Suggestions for the Making and Use of Dies; Examples of Die and Punch Design.

No. 7. Lathe and Planer Tools.—Cutting Tools for Planer and Lathe; Boring Tools; Shape of Standard Shop Tools; Forming Tools.

No. 8. Working Drawings and Drafting-Room Kinks.

No. 9. Designing and Cutting Cams.—Drafting of Cams; Cam Curves; Cam Design and Cam Cutting; Suggestions in Cam Making.

No. 10. Examples of Machine Shop Practice.—Cutting Bevel Gears with Rotary Cutters; Making a Worm-Gear; Spindle Construction.

No. 11. Bearings.—Design of Bearings; Causes of Hot Bearings; Alloys for Bearings; Friction and Lubrication; Friction of Roller Bearings.

No. 12. Mathematics of Machine Design.—Compiled with special reference to shafting and efficiency of hoisting machinery.

No. 13. Blanking Dies.—Making Blanking Dies; Blanking and Piercing Dies; Construction of Split Dies; Novel Ideas in Die Making.

No. 14. Details of Machine Tool Design.—Cone Pulleys and Belts; Strength of Countershafts; Tumbler Gear Design; Faults of Iron Castings.

No. 15. Spur Gearing.—Dimensions; Design; Strength; Durability.

No. 16. Machine Tool Drives.—Speeds and Feeds of Machine Tools; Geared or Single Pulley Drives; Drives for High Speed Cutting Tools.

No. 17. Strength of Cylinders—Formulas, Charts, and Diagrams.

No. 18. Shop Arithmetic for the Machine Tool Drives.—Tapers; Change Gears; Cutting Speeds; Feeds; Indexing; Gearing for Cutting Spirals; Angles.

No. 19. Use of Formulas in Mechanics.—With numerous applications.

No. 20. Spiral Gearing.—Rules, Formulas, and Diagrams, etc.

No. 21. Measuring Tools.—History and Development of Standard Measurements; Special Calipers; Compasses; Micrometer Tools; Protractors, etc.

No. 22. Calculation of Elements of Machine Design.—Factor of Safety; Strength of Bolts; Riveted Joints; Keys and Keyways; Toggle-joints.

No. 23. Theory of Crane Design.—Jib Cranes; Calculation of Shaft, Gears, and Bearings; Force Required to Move Crane Trolleys; Pillar Cranes.

No. 24. Examples of Calculating Designs.—Charts in Designing; Punch and Riveter Frames; Shear Frames; Billet and Bar Passes; etc.

No. 25. Deep Hole Drilling.—Methods of Drilling; Construction of Drills.

No. 26. Modern Punch and Die Construction.—Construction and Use of Subpress Dies; Modern Blanking Die Construction; Drawing and Forming Dies.

No. 27. Locomotive Design, Part I.—Boilers, Cylinders, Pipes and Pistons.

No. 28. Locomotive Design, Part II.—Stephenson Valve Motion; Theory, Calculation and Design of Valve Motion; The Walschaerts Valve Motion.

No. 29. Locomotive Design, Part III.—Smokebox; Exhaust Pipe; Frames; Cross-heads; Guide Bars; Connecting-rods; Crank-pins; Axles; Driving-wheels.

No. 30. Locomotive Design, Part IV.—Springs, Trucks, Cab and Tender.

No. 31. Screw Thread Tools and Gages.

No. 32. Screw Thread Cutting.—Lathe Change Gears; Thread Tools; Kinks.

No. 33. Systems and Practice of the Drafting-Room.

No. 34. Care and Repair of Dynamos and Motors.

No. 35. Tables and Formulas for Shop and Drafting-Room.—The Use of Formulas; Solution of Triangles; Strength of Materials; Gearing; Screw Threads; Tap Drills; Drill Sizes; Tapers; Keys; Jig Bushings, etc.

No. 36. Iron and Steel.—Principles of Manufacture and Treatment.

No. 37. Bevel Gearing.—Rules and Formulas; Examples of Calculation; Tooth Outlines; Strength and Durability; Design; Methods of Cutting Teeth.

No. 38. Grinding and Grinding Machines.

(See inside back cover for additional titles)

MACHINERY'S REFERENCE SERIES

EACH NUMBER IS ONE UNIT IN A COMPLETE LIBRARY OF MACHINE DESIGN AND SHOP PRACTICE REVISED AND REPUBLISHED FROM MACHINERY

NUMBER 8

WORKING DRAWINGS AND DRAFTING-ROOM KINKS

THIRD EDITION—REVISED AND ENLARGED

CONTENTS

Working Drawings, by LESTER G. FRENCH - - 3
Sizes of Working Drawings, by WILLIAM L. BREATH 20
Draftsmen's Tools - - - - - - - - 23
Drafting-Room Kinks - - - - - - - 37

Copyright, 1911, The Industrial Press, Publishers of MACHINERY, 49-55 Lafayette Street, New York City

CHAPTER I

WORKING DRAWINGS*

A working drawing should convey to the eye of the observer a clear idea of what the draftsman or designer wants made, and of how the various details are to be carried out. The drawing should be so complete that when it is passed into the shop no further questions will be necessary, and to this end, all necessary information as to material, bolts and screws, the kind of fits and finish desired, etc., should be plainly marked on the drawing.

It is not the business of the mechanical draftsman, however, to make pictures, and he seldom has occasion to draw perspective views. He has to convey his ideas by simpler methods than this, and in making working drawings uses what is called "Orthographic Projection," or simply, projection. His drawing may not always look like the object, from the pictorial standpoint, since certain conventional figures and methods are adopted to represent machine parts, which can be drawn much quicker in this way than if their true form were reproduced. Thus, it is not customary to draw screw threads in the way in which they actually appear to the eye; an easier and quicker method of representing them is adopted, and the same is true of other parts.

To read working drawings, or to be able to make them, one must not only be familiar with the conventional methods commonly used, but one must understand wherein they differ in principle from perspective drawings or photographs, which represent the [illegible] as it appears to the eye.

To a novice a working drawing looks like a lot of lines that do not represent clearly what they are intended to show; but an experienced mechanic or draftsman finds that his attention is not taken by the mere lines, and that he involuntarily thinks of the objects which they stand for.

Projection Drawing

Briefly stated, when a drawing is made by projection, it represents an object as one would see it if the eye could be directly over each point of the object at the same time; or, what would be the same thing, if one could stand at an infinite distance from the object and still observe it.

By a very simple illustration the reader will be able to understand the meaning of this definition and will see what is the difference between a view in perspective, such as one sees in a picture, and a view in projection, such as one finds in a working drawing.

Place a box, with the cover removed, on its side, and then look at it with your eyes right in front of the open side; or if preferred, place a

* MACHINERY, October and November, 1901.

camera in this position and photograph the box. The result will be a view, Fig. 1, where not only the front edge of the box appears, but the interior sides and bottom as well, indicated by the lines *ABCD*. The reason for this is that the lines of sight diverging from the eye of the observer reach both the front edge of the box, as indicated at *A* and *B* in Fig. 2, and the bottom, indicated at *C* and *D*. This is a view in perspective and from it one gets a partial idea, at least, of the shape and depth of the box, besides the shape of the front edge.

In Fig. 3 is the same view of the box, but shown in projection. Here there is nothing to indicate what the depth of the box is. The view gives a conception of the shape of the front, but to form an idea of its depth there must be another view taken at right angles to the front view.

In Fig. 4 is shown how this view in projection may be supposed

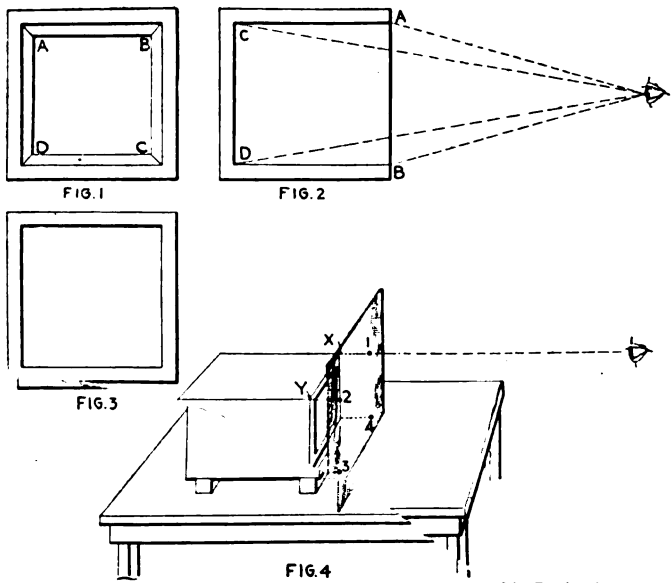

Figs. 1 to 4. Views in Perspective and in Orthographic Projection

to be produced. The box is placed on the table, and in front of it, and parallel with it, a piece of glass. Let a person stand so that his eye will come directly in line with one corner *X* of the box, as in the illustration, and make a dot on the surface of the glass, indicated by point 1, where the line of vision passes through the glass to this corner. Now let him move until his eye comes exactly in front of point *Y*, and mark point 2 on the glass, and so on, all the way around. Then, by connecting points 1, 2, 3 and 4 he will have a correct representation in projection of one edge of the front of the box.

The lesson taught by this is that a projection drawing gives no idea of distance to or from the observer in a single view, but represents, simply the distance in any direction in a plane surface like a

sheet of drawing paper, held squarely in front of the observer. This is why more than one view is required to show in projection what may be evident in a single view of perspective. Also, in projection, the views, generally being taken at right angles, represent the sizes of machine parts accurately, while, in perspective, part or all of them may be foreshortened, making it difficult to properly dimension them.

Arrangement of Views

In Fig. 5 are four views of a wedge-shaped block in the top of which is driven a round pin. All these views of so simple an object are, of course, unnecessary, and they are merely shown in order to indicate the correct positions of the different lines in the several views. The front view appears as though the object were held directly in front of the observer. The top view is placed above the front and appears as though the observer were looking down upon the object. The end view at the right shows the block as it would appear if looked at from

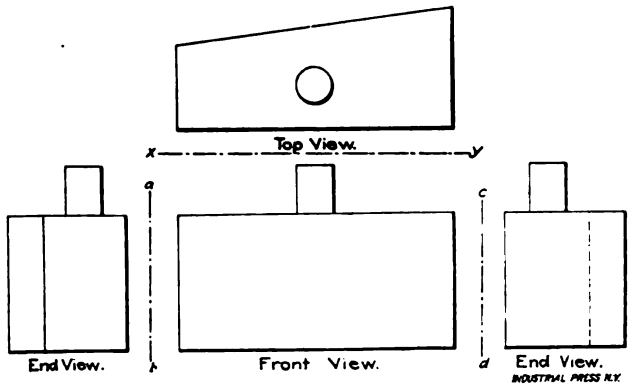

Fig. 5. Arrangement of Views—Third Angle Projection

the right-hand end, and the end view at the left shows it as it would appear if looked at from the left.

The views, arranged as here shown, are in what is known as the "third angle of projection," the full meaning of which cannot be explained without taking up the elementary principles of projection, a treatment of which is to be found in any book on mechanical drawing. This is the arrangement commonly adopted for machine drawings.

In Fig. 6 is an arrangement of views of the same object in what is known as the "first angle of projection." This arrangement is generally employed in architectural and in structural work, such as drawings of bridges, etc., but is not so often used for machine drawings. It will be noted that in Fig. 6 the top view is below the front view, the view of the right-hand end of the block is shown at the left, and the view of the left-hand end is shown at the right. Comparing further, it will be seen that in Fig. 5 the pin in the front view points toward the top view, while in Fig. 6 it points away from it; and in the end views, the pin appears near the inside edges in Fig. 5, and near

the outside edges in Fig. 6. The views are so arranged in Fig. 5 that if the top view be placed directly on top of the block and then the sheet of paper be folded over on the line x y, the front view will come directly in front of the block; and then if the sheet be again folded or bent back along a b, the left-hand end view will come in front of the left end of the block; and finally, if it be folded back along c d, the right-hand end view will come in front of the right-hand end of the block. If the block were inclosed in a box having transparent sides and the outlines of the block were traced on each of the sides as they appeared to an observer looking through the successive sides of the box, and finally the sides were unfolded so as to lie flat in one plane, the views would appear as in Fig. 5.

To produce the arrangement shown in Fig. 6 we may assume the block to rest on the paper with its top side uppermost. If we then

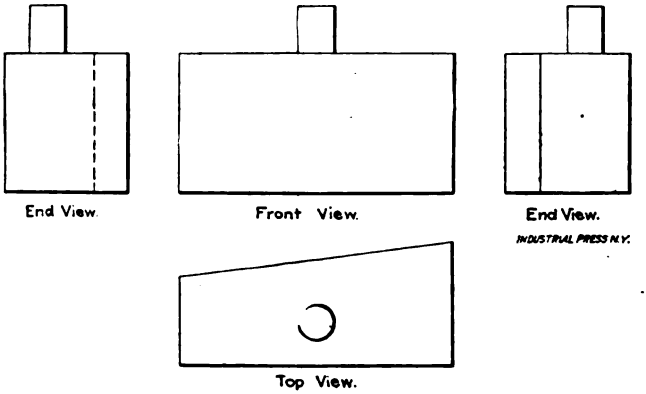

Fig. 6. Arrangement of Views—First Angle Projection

mark around the block with a pencil we will get the top view shown. If the block then be tipped over with its front side uppermost and we mark around it, the front view will be obtained. Again, if it be tipped first on one end and then on the other the two end views will be obtained.

A close study of Figs. 5 and 6 will show how necessary it is to adopt some one system and to adhere to it, as otherwise there will very likely be much confusion in the shop, and perhaps mistakes made by the patternmaker.

Conventional Lines

The various styles of lines used in working drawings are shown in Fig. 7. The ordinary line (1) is for outlining objects, for section lining, and for all ordinary purposes. The shade line (2) is used to represent the edges supposed to separate the light from the dark surfaces of an object—that is, the surfaces on which the light strikes from those in shadow, as shortly to be explained. The dotted line (3) is chiefly for representing the details of an object when they are so covered as to be obscured from view. Many details can be represented

in this way and their arrangement clearly indicated, although they would not be visible in the actual piece. The dash line (4) is used mainly for dimension lines. The dash and dot line (5) and the dash and double dot line (6) are both used for center lines, some draftsmen preferring one and some the other. When a drawing of a piece, like a wheel or a bolt, for example, is symmetrical, a center line is sometimes drawn through the center or axis of symmetry of the figure, and if there are two views of the same piece, the line is frequently extended through both, showing that they are connected. The dash and dot line (5) is also used for connecting lines between different views, as in Fig. 8, and for construction lines in laying out mechanical movements or geometrical figures. In no case are the lines (5) and (6) used to represent the actual edges or surfaces of a piece, except occa-

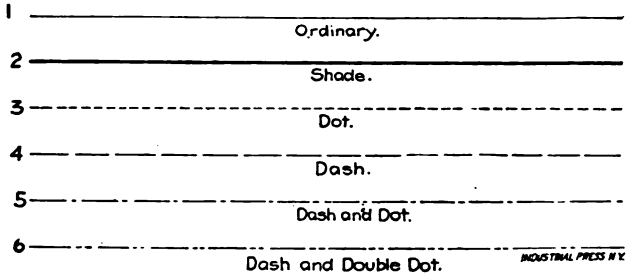

Fig. 7. Conventional Lines

sionally when they are made to indicate the plane in which a piece is supposed to be cut or broken, in order that a sectional view may be shown in that plane. Examples of this will be shown later.

Shade Lines

In architectural drawing the effect is improved by taking account of the shadows that would be cast by the sun were it shining upon the object. The rays of the sun are supposed to come from above and from the left at such an angle that when projected on the paper they would be represented by lines making an angle of 45 degrees with the horizontal and vertical. A great deal of time is sometimes spent in determining which surfaces should be light, which in shadow, and what the shape would be of the shadows cast.

In mechanical drawing attention is sometimes paid to this point to a limited extent. Assuming the sheet to be held directly in front of the observer, and the light to come from over his shoulder in the direction of the diagonal of a cube, heavy lines would be drawn along the edges separating the light from the dark surfaces. In many cases it would require considerable study to determine what lines should be a limited extent. Assuming the sheet to be held directly in front of cases, however, it is the lower and right-hand lines that must be shaded, and the best practice is to follow this general rule without regard to the exact manner in which the light strikes. When the lines are used in this way they answer the purpose of improving the appear-

ance of the drawing, and they also indicate which are the raised and which the depressed surfaces. This will be clear from Fig. 8, in which several examples of shading are shown. At *A* is a square block, hollow in the center. The outer shade lines show that the block is raised above the surface of the paper, and the location of the inner lines shows that the center of the block is depressed below the outer surface of the latter. At *B* is shown how the block would be shaded if at an angle of 45 degrees. Since the projection of a ray of light is supposed to be at 45 degrees there is no logical reason why the lines *c c* should

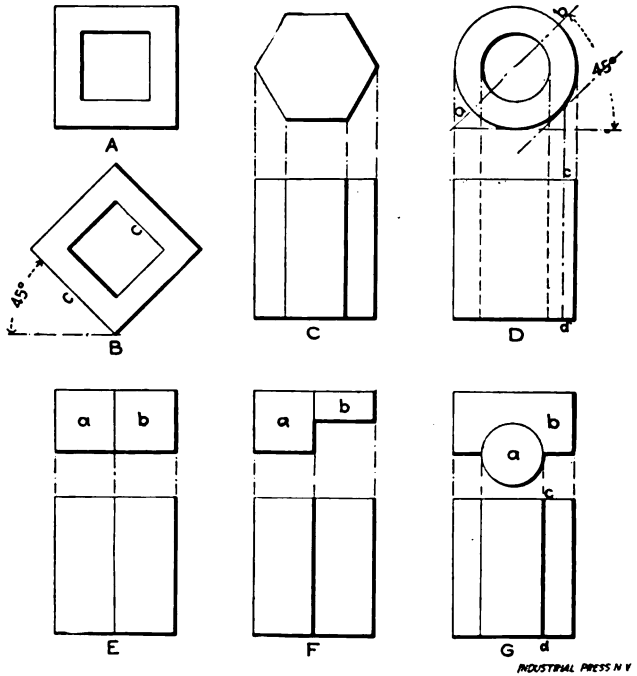

Fig. 8. Shade Lines

not be shaded instead of those shown; but the figure looks well as drawn. At *C* is the shading for a hexagonal prism, and at *D* for a hollow cylinder. The shading on the top view of *D* starts at the 45-degree line *a b*, gradually increases, and then diminishes to nothing when it again reaches the line. The right-hand element of the cylinder in the lower view of *D* should not rightly be shaded, because it really separates two dark surfaces, the shadow actually starting on the element *c d*. In practice, however, the right-hand element is the one shaded. At *E* are two blocks *a* and *b* of the same size. No shade would be used to separate them; but at *F*, where blocks at *a* and *b* are of different thicknesses, the shade line would be necessary. At *G*

the block *b* is recessed for the cylinder *a*. It may be shaded as shown, although some draftsmen might prefer to leave off the shade line *c d* in the lower view.

Screw Threads

Conventional methods of representing screw threads are shown in Fig. 9. These are the most common methods, although there are some others less frequently met with. Methods *A* and *B* are generally employed, and of the two that of *B* is to be preferred, as it is more easily done. Some draftsmen place the heavy lines shown at *B*, repre-

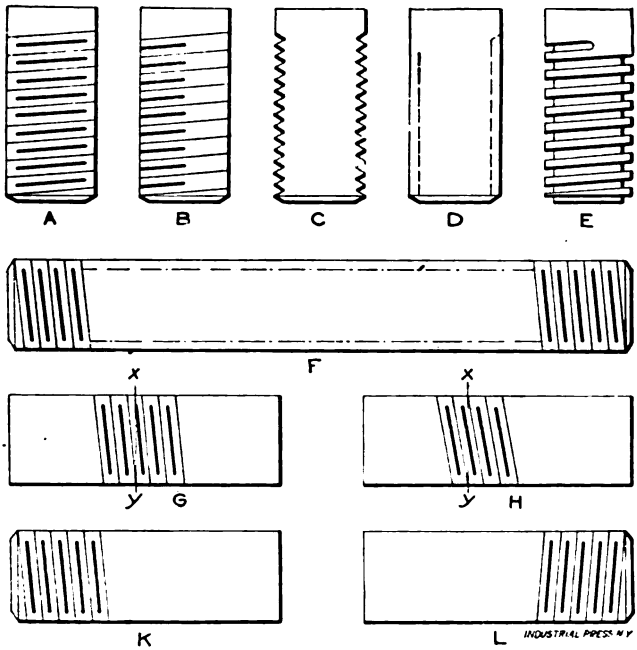

Fig. 9. Conventional Indications of Screw Threads

senting the bottoms of the threads, on the right-hand side instead of on the left-hand side, as it then gives the effect of shading. At *E* is a conventional square thread. If any long piece is to be threaded the entire length, the threading can be indicated as at *F*, which saves drawing the complete thread. The difference between the representation of a single and a double thread is indicated at *G* and *H*. The single thread is at *G*, and the inclination of the lines is such that the line *x y*, at right angles to the axis of the piece, passes through the top of the thread at one side and the bottom of the thread on the other side of the bolt. At *H* the inclination is such that the line *x y* passes through the tops of the threads on both sides of the bolt. At *K* is shown a right-hand thread, and at *L* a left-hand thread.

Tapped Holes

At *A B C D*, Fig. 10, are methods of representing tapped holes where they are obscured from view and must be shown by dotted lines. Those at *A* and *B* are much used, but where the drawing is crowded, those at *C* and *D* are to be preferred, and in any case they make a neater appearance. Top views of surfaces having tapped holes may be indicated either as at *E* or *F*. If as at *E*, a circle should be drawn of a diameter equal to the outside diameter of the bolt, and the hole marked as indicated, which shows that the hole is to be tapped and also indicates the size of the bolt to be used. If the method at *F* is employed, the inner circle should be approximately equal in diameter to the diameter of the bolt at the base of the threads, and the outer dotted circle should be equal in diameter to the outside diameter of the bolt. At *G* is the top view of a tapped hole as it appears in a sectional view. At *H* is a representation of a threaded piece which extends through a block threaded to receive it, as shown. At *K* is a

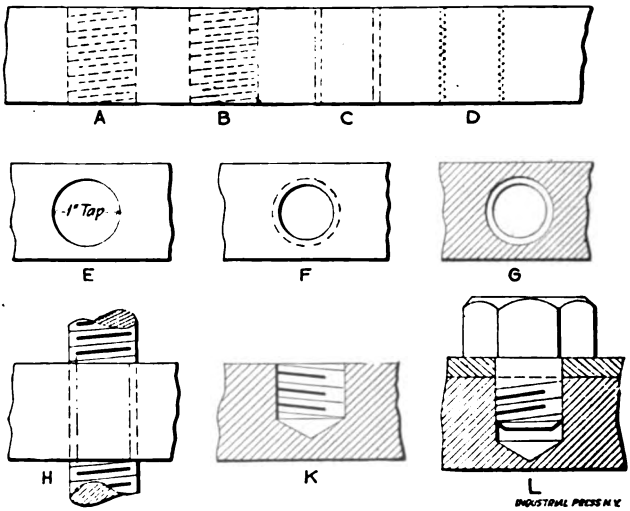

Fig. 10. Representation of Tapped Holes

vertical section through a tapped hole. This is for a right-hand thread, although the lines incline as though it were a left-hand thread. This is simply because only that part of the thread is visible which is at the farthest side of the hole where the threads must, of course, incline in a direction opposite to the direction they take at the front side of the hole. This can be clearly seen by examining a bolt or nut. At *L* is shown a section through a tapped hole into which a bolt has been screwed.

Broken Sections

In Fig. 11 are shown methods of representing bars and rods, shafting, structural beams, etc., when it is not convenient to show their whole length on the drawing. In such cases these pieces would be

drawn as long as the limits of the drawing would allow, and then would be broken as indicated, to show that the full length of the piece is not represented. In placing the dimensions on the drawing the full length would, of course, be given.

General Principles of Working Drawings

When a draftsman has to make a drawing of a machine already constructed he first measures and sketches each part separately, putting all necessary dimensions upon the sketches, and then he assembles these parts, so to speak, in the form of a general drawing. On the other hand, if he has to design a machine he will first make a general drawing with the parts in place and from this he will obtain the dimensions of the various pieces which he will draw separately, or at least in sufficient detail to show clearly what is wanted. In either case, he must have either a general or assembled drawing of the machine, and

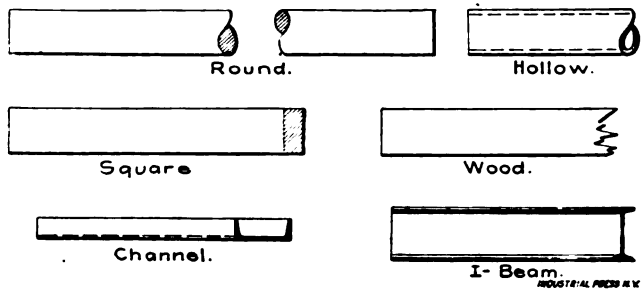

Fig. 11. Broken Sections

detail drawings of the machine parts, the order in which they are made depending upon whether he is working from the machine itself, or originating the design.

In the general views outlines are drawn of such details as are thought essential to clearness; but as certain features of construction and many of the small parts of the mechanism would inevitably be invisible to one looking at the assembled machine, they must be represented by dotted lines if they are to be incorporated in the general view. A multiplicity of these lines leads to confusion, however, particularly if it is attempted to dimension them, and for this reason the detail sheets are necessary.

We thus see that obscure details, not visible when looking at the assembled piece, may be represented either by the use of dotted lines or by making separate views of each piece apart from its relation to the others.

Sectional Views

A third method of representing details is by means of sectional views. Suppose, for example, a drawing were to be made of a connecting-rod end, in which were the brasses, the adjusting wedge and screws, etc. A general view of the rod might be made, with part or all of the details shown by dotted lines; and then, on another sheet,

or on another part of the same sheet, the details could be drawn separately and properly dimensioned. That would be one way to make the drawings. Another way would be to make a general view of the rod as before, but to show the end as though it had been cut or sliced in a plane parallel with the paper, and the upper parts removed, exposing the details. The parts cut through would be "cross-sectioned," bringing them into bold contrast, and the dimensions could all be placed on this one drawing. Such a method is possible with a simple construction, having but few parts, and is often adopted to advantage.

Sectional views may also be used for much simpler purposes than above outlined. They may be used to show the shape of the arm of a

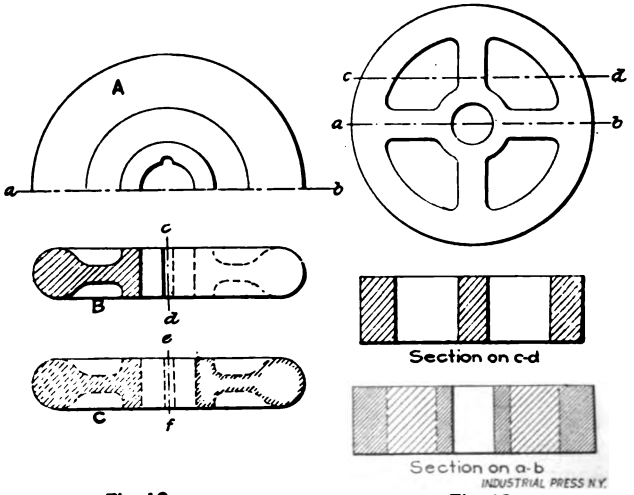

Fig. 12. Fig. 13.

Methods of Showing Sections

pulley or of any other part of any casting that can be conveniently represented in this way. The cutting plane may be assumed to lie at any angle necessary to bring out the details most clearly; or, if desired, a sectional view may represent a casting as though it were cut through a part of the distance on one plane, and the rest of the way on another plane, either higher or lower, as convenient. All that is necessary to have the view clearly understood is to draw a line through one of the views of the piece, indicating just where the sectional view is supposed to be taken, and then to make a note on the drawing to that effect.

In Fig. 12, at *A*, is a plan view of a hand-wheel. As the wheel is symmetrical, it is quite unnecessary to draw more than half the wheel, although the whole wheel may be drawn if desired. It is here represented as though cut in two along its diameter on the line *a b*. This line should be a dash-and-dot line, as shown, and not a solid one. It has been pointed out on page 7 that one of the uses of a dash-and-

dot line is as a center line where a piece is symmetrical, and its use here would indicate that the half of the wheel not drawn was like the part that was drawn, even if it were not otherwise apparent; for under no other condition would the figure be symmetrical.

At *B* and *C* in Fig. 12 are shown sectional and edge views of the hand-wheel and the different ways in which they may be represented, according to the fancy of the draftsman. In *B*, to the right of the center line *c d*, is an edge view of the wheel in which the shapes of the rim and hub are shown by dotted lines, since they would not be

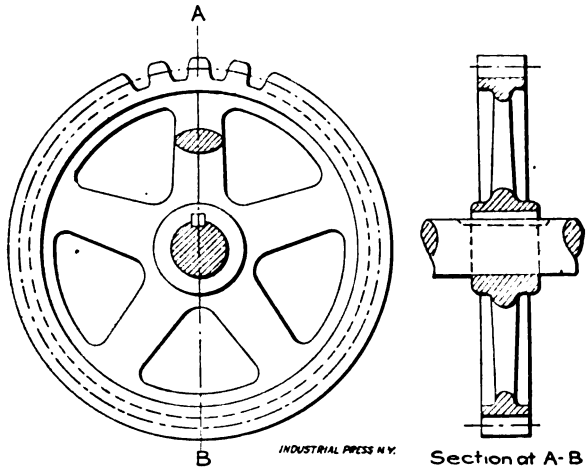

Fig. 14. Conventional Sectioning of Gear Wheels

visible to an observer who held the wheel so that he looked directly at the edge or rim. To the left of *c d* is a sectional view taken along the line *a b* in *A*.

In the view below this, at *C*, are shown two methods of drawing what are termed "dotted sections." The sections are supposed to be taken on the line *a b* as before, but cross-sectioning is done by dotted lines, indicating that the shape of the section would be as shown, but that the parts in front of it have not actually been cut away. This is a very convenient convention to adopt at times. For example, in showing a milling machine knee and saddle it would enable one to represent the knee and saddle as they actually appeared, and also to show a sectional view of the mechanism under the saddle and inside the knee. If, on the other hand, the view were drawn as though the knee were actually cut through, one would not form an idea of its exterior appearance unless another view were drawn. It will be noted in the figure that the dotted lines extend clear across the section, as drawn at the left of *e f*, and only along the edge of the section at the right of *c f*.

In Fig. 13 is a pump valve-seat having four webs connecting the outer rim with the hub. There are two ways of showing a sectional

view of a piece in which webs occur. If the view were taken along the center line *a b* and sectioned, as usual, nothing would be gained, since it would give no idea of the shape of the webs. Some, therefore, prefer to take the section to one side of the web, as on the line *c d*, and as shown in the upper sectional view. This indicates clearly what the shape of the web is. Others, however, prefer to adopt the expedient illustrated in the lower sectional view. Here the section is supposed to be taken along the line *a b*, but where the plane cuts through the webs, the sectioning or hatching is done with the lines further apart than in the balance of the section, thus making enough distinction to show what part of the plane passes through the webs and what part does not. Both methods have their uses under suitable conditions.

In Fig. 14 are two views of a gear wheel. The one at the left side is a side view, and as all the teeth are, of course, alike, it is unnecessary

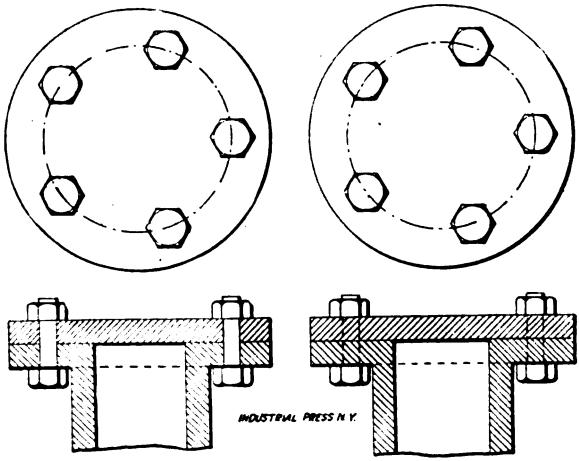

Fig. 15. Representation of Bolts in Sections

to draw more than a few of them. The pitch line of the teeth is represented by a dash-and-dot line, this convention always being followed. In the part of the rim where the teeth are not drawn, the face of the gear is indicated by a solid line, and the position of the roots of the teeth by a dotted line. Some, however, prefer slightly different conventions. To show the shape to which the arms are to be formed, a sectional view of one of the arms is drawn in this view. The end of the shaft is supposed to be broken off and is sectioned.

The right-hand view, in Fig. 14, is a sectional view taken along the line *A B*. It will be noted that the shaft and key are not sectioned. The method followed in such cases is usually to section the castings or inclosing parts, such, for example, as the hubs, rims, etc., of a wheel, but not inclosed parts like shafts, rods, bolts, keys etc. A bushing being both an inclosed and inclosing part might or might not be sectioned, individual judgment dictating the method here as

elsewhere. This gear has five arms, and the line *A B* cuts through one of them only. They are not sectioned in the right-hand view, and two opposite arms are drawn as though both of them lay in the plane of the paper. While this is not correct, it is the method usually followed. The method of representing the gear teeth in sectional views is generally as shown in this cut.

In Fig. 15 are sectional and top views of a cylinder or pipe on which a blank flange is bolted. There are five bolts, and the plane in which the sections are taken would cut through only one of them. Most draftsmen, however, would draw the sectional view as indicated at the left. The bolts are shown as though both were in the plane of

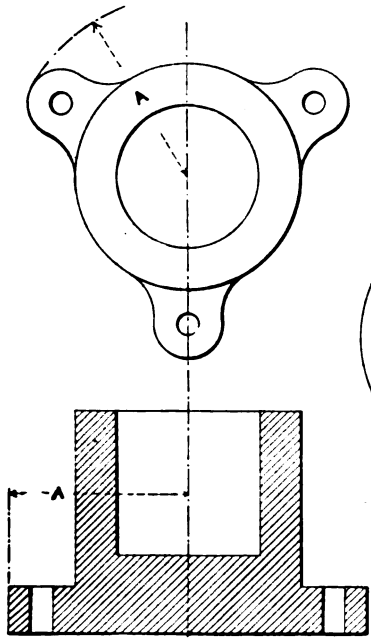

Fig. 16. Section of Unsymmetrical Object

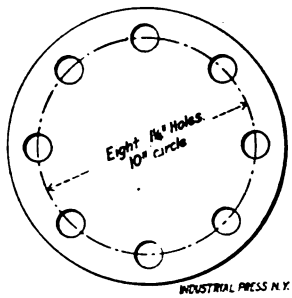

Fig. 17. Dimensions of Holes in a Circle

the section, and these bolts are not sectioned, but are drawn in full, as explained above. It is not necessary, moreover, to show more than two of the bolts, since it would detract from the clearness, and the top view shows plainly how many bolts there are. Some draftsmen think bolts drawn in this way are too prominent, and prefer to represent them in sectional views as shown at the right in Fig. 15. This method also has the sanction of fairly common usage.

Fig. 16 is another example of a figure that is not symmetrical in all respects. It shows two views of a step bearing having three ears or lugs for bolting it to its base plate. In making a sectional view of such a piece should the cutting plane be supposed to pass through the lugs? In most cases, yes, and according to common practice the

sectional view would be made symmetrical, and the distance *A* in the lower view, from the center of the piece to the outer end of each lug, would be made equal to the distance *A* in the upper view.

In any machine various kinds of metal and other material are used, and when sectional views are made it is convenient to have some standard method of cross-sectioning the different parts to indicate what the metal or material is. Conventional sectionings adopted for this purpose are given in Fig. 18, the system here represented following very closely that used by the U. S. Navy Department. It should be said, however, that draftsmen are coming more and more to section all parts alike, adopting the style used for cast iron for all kinds of material, and then printing on the pieces themselves what the material is of which they are composed. This avoids the possibility of mistake

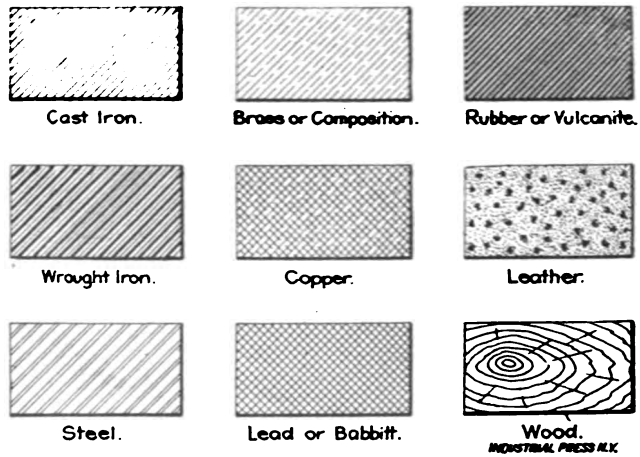

Fig. 18. System of Indicating Different Materials by Cross-sectioning

through failure to understand what the conventional methods of sectioning are supposed to represent.

Dimensions

The most important part of a drawing is the dimensions. They should be given so fully and completely that a workman will never have occasion to measure a drawing. The dimensions should include an "over-all" measurement and the different measurements that make up the "over-all" size. Dimension lines, and the extension lines which the arrow heads of the dimension lines touch, are usually fine black lines made up of long dashes. They should be so drawn as to appear secondary in importance to the drawing itself. Some draftsmen draw all these lines in red ink and use a solid instead of a broken line. In a blue-print the red lines will appear lighter than the black ones, making a good distinction.

In Fig. 19 is a sketch of a bushing. The diameter of the bore is given at *H* by a dimension passing through the center of the circle.

It is somewhat confusing, however, to have more than one dimension line passing through a center and therefore it is better to give the other diameters elsewhere, if possible, as at *E*, *F*, and *G*. The length of the various steps of the bushing are given at *A*, *B*, and *C*, and it will be noticed that they are slightly offset—that is, the dimension lines do not extend in one straight line. This makes a very clear arrangement. The over-all dimension is at *D*. Methods of placing dimen-

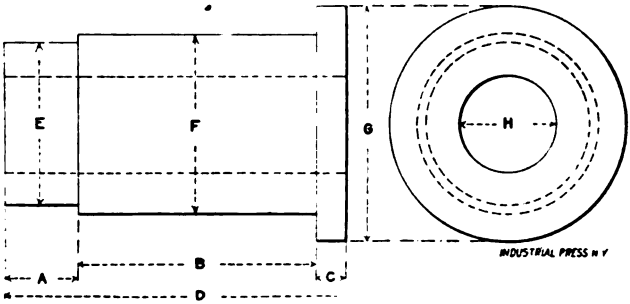

Fig. 19. Sample Drawing, Showing Location of Dimension Lines

sions on holes that are drilled in a circle or a row are shown in Figs. 17 and 20. That in Fig. 17 requires no explanation. In Fig. 20 center lines are drawn in each direction through the centers of the holes and the dimensions are given from center to center each way, and also from the edges by which the holes are to be located.

Fig. 21 refers mainly to the dimensions of the bolts. At *A* is a

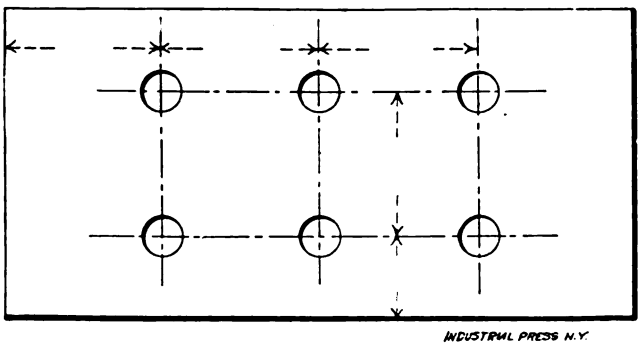

Fig. 20. Dimensions of Holes Located in Straight Lines

hexagon head bolt, so drawn that three sides of the head are visible. Bolts are usually drawn in this way because they look well, and as most bolts used in machinery are standard and taken from stock, no dimensions are necessary other than to specify the diameters and lengths. These may be printed on the drawing, or better yet on a list of bolts and other small parts, sometimes called an order list, which should accompany the drawings. Every bolt and machine screw

should be specified in some such way. At *B* is a hexagon head bolt, so drawn that only two sides are visible. If it is a special bolt it should be represented like this so that the dimension across flats can be given, to which the head is to be milled. At *C* and *D* are two ways of drawing a square head bolt, according to whether the dimensions across flats are necessary or not. In cases like *B* and *D* the abbreviations *Hex.* and *Sq.* should be used as shown, so that there will be no mistake about the style of head desired.

The length of a bolt should be given from under the head, as at *E* in Fig. 21. The total length should be given and also the length from the head to the beginning of the thread, showing how high up the thread is to be cut. At *F* in Fig. 21 is shown how to give a dimension when the space is narrow, and at *G* and *H* how radii may be denoted.

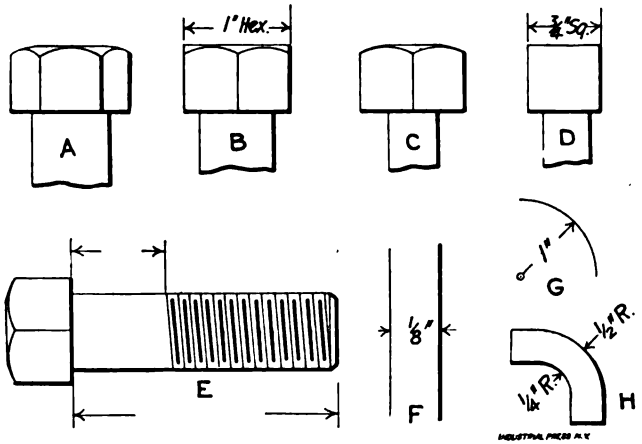

Fig 21. Dimensions of Minor Details

There are various rules about the dimension figures themselves, to which allusion should be made. First of all, the figures should be plain, so that no mistake can be made in regard to feet and inches. The usual practice is to represent feet by the prime mark (′) and inches by the double prime mark (″). Some hold that this is not distinction enough and insist on the use of "ft." for feet while retaining the inch mark. Some also object to the slanting line between the numerator and denominator of fractions, holding that the line might be mistaken for the figure one, if carelessly made. Some prefer the horizontal line, and others write the numerator over the denominator and omit the separating line entirely. It is customary to arrange all the dimensions to read either from the bottom or the right-hand side of the drawing, though it is possible to have everything read from the bottom by making the figures upright, or up and down on the sheet, regardless of the direction of the dimension lines. In the shop, inches are used more than feet in measuring, and dimensions are usually in inches, except for large work. In some shops they are given in inches even up to 10 feet.

Indicating Finished Surfaces

A drawing is or should be so marked as to tell the workman what surfaces are to be finished and what kind of finish is desired. This is often done by writing a character, resembling the letter *f*, across the line representing the edge of the surface to be finished, as in Fig. 22. Another way is to write the words "polish," "finish," "ream," etc., near the edges of the surfaces to receive the treatment indicated. Still another method that is much in use is to draw a red line near the edge of each surface to be finished. When a blue-print is taken from such a tracing, the red lines will print fainter than the black lines, and a draftsman can easily trace over them on the blue-prints with red ink. Still another method that can be used to advantage in a manufactur-

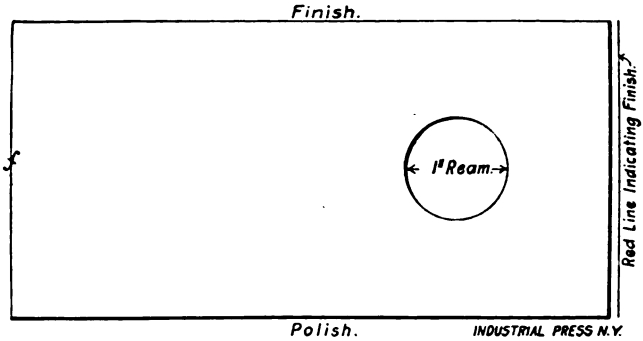

Fig. 22. Methods of Indicating Finished Surfaces

ing plant is to put only the dimensions of finished surfaces on the drawing, leaving off entirely all dimensions of rough surfaces that are of service to the patternmaker, but to no one else. The workman in the shop then knows that wherever he sees a dimension the surfaces are to be machined. One feature that should be looked after more carefully than is usually done is to indicate how closely the various parts must be finished to size. If a piece must be made within a half-thousandth of an inch the workman ought to know it, and if a thirty-second of an inch is near enough he surely ought to know it. The practice of giving dimensions in thousandths of an inch where needed and of using plus and minus limits where sizes are to be kept within limits, putting the limits on the drawing, is a good one to follow.

CHAPTER II

SIZES OF WORKING DRAWINGS*

Manufacturers do not have any universal standard of sizes for working drawings. From time to time there have been recommendations made by various societies regarding standard sizes, but these recommendations have had little effect in bringing about any generally accepted standard in drafting-room practice. Many firms use large and unwieldy drawings, which are as difficult for the draftsmen to work on as they are cumbersome to handle by those who are to use them. Of course, most drafting-rooms have their own standard sizes for the sheets. There is usually a small sheet for sketches and details and then larger sizes which are multiples of the detail size. These larger sizes are used for the assembly drawings and for detailing large

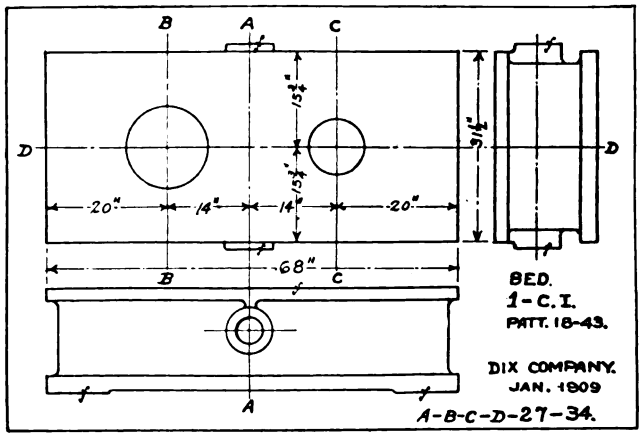

Fig. 23. Master Drawing of Simple Machine Bed

pieces. It is, however, difficult to take care of all these various sizes of drawings, a difficulty which can be avoided by having only one size sheet, of a convenient size for both the draftsmen and the shop.

The size of the sheet to be adopted should be chosen first of all with regard to economy in cutting the sheets from commercial sizes of paper and tracing cloth. Tracing cloth comes in rolls 30, 36, 42, or 48 inches wide, and there is thus a wide range to choose from. The standard sheet used by the U. S. Navy department, and, the writer believes, also by other departments of the government, is 21 by 27 inches.

All manufacturers working on orders for the Navy must send tracings of their work on this size sheet, and some manufacturers, therefore, have adopted this size as their own standard. It can be cut with-

* MACHINERY, March, 1909.

out waste from a roll 42 inches wide, but it is, however, too large to be convenient for the draftsman, as it makes his work much more tiresome than a small sheet where all corners can be readily reached from one position. Besides, this sheet gives more room than is necessary for detailing one piece of ordinary size, and therefore, as many as twenty pieces are often detailed on one sheet. This is an inconvenient system, as it often happens in the shop that two or more men must refer to different details on the same drawing, and often the blue-print will be cut in pieces so that each man gets the part on which he is working. This is a common-sense way of avoiding the inconvenience of having two men working on the same blue-print, and also is a hint to the drafting-room to have but one detail on each sheet. A convenient size sheet could be obtained by cutting the size mentioned in two, making a size 13½ by 21 inches. Even a somewhat smaller sheet, say 12 by 18 inches would be better.

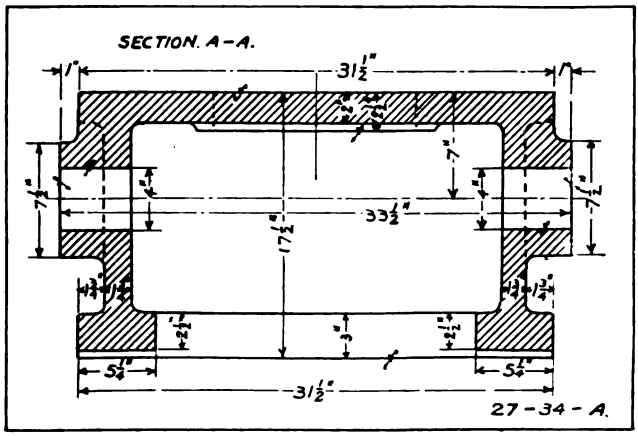

Fig. 24. Detail Section of Bed in Fig. 23

To use a small size sheet for all assembly drawings and for detailing of large pieces, requires a method somewhat different from those ordinarily in use in drafting-rooms, but it does not add to the complication of the work of the drafting-room. Fig. 23 shows a 13½ by 21-inch sheet, and on it is drawn a bed of simple design. The bed is drawn only in outline, and shows a plan, elevation and end view. The main center lines are also drawn, as well as the main faces. The drawing is numbered according to the regular system of the drafting-room. The center lines are lettered *A-A*, *B-B*, *C-C*, *D-D*; *A* refers to a second sheet of the same size on which is drawn to a larger scale the section *A-A* of the bed. On this sheet are put all dimensions, notes and instructions necessary. In the same way sheets *B*, *C* and *D* are drawn until the bed is fully detailed. The master sheet, Fig. 23, has in the title corner the letters *A*, *B*, *C* and *D*, showing at a glance how many sheets there are in the complete set. The next piece in the construction would be detailed in a similar way, the master sheet taking the

number 27-35, and having as many supplementary sheets, *A*, *B* and *C*, as necessary.

In case there is room on one sheet for more than one detailed section, these sections will be noted on the master drawing by the letters *A-A*, *A-B*, *A-C*, etc., the letter *A* being used for each section on sheet *A*. If the piece to be detailed is too large or complicated to have the three views clearly outlined on the master sheet, then each view will be made on a separate sheet, and the plan view will be considered the master drawing; the other master drawings have the same serial number, with a number added, as for instance, 27-34-1, and 27-34-2. In this way every part of the machine will be fully shown, as well in its relation to the other parts as in detail. In fact, the main purpose of the master drawing is to show the relation of the different parts of the machine to each other. When the master and detail

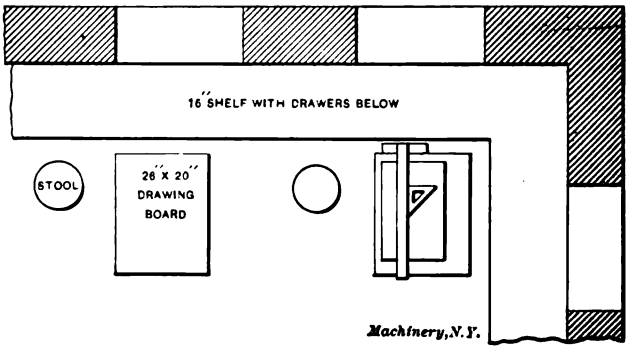

Fig. 25. Convenient Arrangement of Drafting-room

drawings of a machine are fully completed, they can be bound together by any suitable loose-leaf method, and if desired for reference, an index of the pieces can be made on a standard sheet.

Fig. 25 shows a convenient arrangement of a part of a drafting-room, where the small sheet system has been adopted. The designing draftsman's board is not shown. He, of course, must have a board as large as is convenient for the actual designing work. Running around the room, and under the window sills, is a shelf 16 inches wide, with drawers under, large enough for the standard size drawing. The draftsman's tools and books can also be kept in drawers under the shelves. Being at the left hand of the draftsman, the shelf is a convenient place for reference drawings, books, etc.

The system outlined has been objected to on the ground that it is not advisable to have the various views on separate sheets; much time is lost finding the sheets required to show the detail complete; the draftsman's time is unnecessarily wasted, etc. This criticism is partly justified, and it would be impossible to recommend the system for all classes of work and all conditions. Each individual drafting-room must decide for itself whether the work peculiar to it could be advantageously handled in the manner described.

CHAPTER III

DRAFTSMEN'S TOOLS

The selection of the proper tools is one of the most difficult problems which meet the young draftsman. Few draftsmen agree fully as to what constitutes a complete set of tools, or about the best construction of the various appliances. It is also evident that the draftsman must be guided somewhat by the class of work he is doing. Certain tools which may be required by the work carried out by one designer may not be of any use to another. In general, however, the requirements are fairly similar, and in the following is given a specification of a complete set of tools purchased by an experienced draftsman, for his own use. Undoubtedly his judgment and experience may give some valuable suggestions as to the selection of the tools needed by any draftsman.

In the set referred to the three bow instruments are 3¼ inches long with center adjustment. The bow pen will draw perfect circles from less than 1/32 inch diameter to 3¾ inches diameter. There is one 3½-inch pencil compass with fixed pencil and needle points, and a 5½-inch pen compass with fixed pen, needle points, and hair spring adjustment. The pencil compass is small, because it is preferable to use trams for all pencil work beyond its limits, but the pen can be used to advantage in the 5½-inch size. The hair spring adjustment on it is a great convenience, although by no means necessary. The fixed points would not pay a man who draws only occasionally, but for the man who draws all the time they are well worth the cost of the extra instrument. The two ruling pens are 5 inches and 5½ inches long. The trams consist of a tubular German silver bar in three sections, held together by long slip joints, and will work to a radius of 50 inches. Both heads slide on the bar, being clamped in the desired position with thumbscrews, and the points are adjustable in either head. The delicate adjustment is of the swinging lever type, which is the only satisfactory one for trams. There are two divider points, pen, pencil and needle points and a knife for cutting out circles. The whole instrument is very stiff, light and of remarkably neat appearance, with a bar long enough for all ordinary work, but when a longer one is required, it is easily spliced with one of wood.

No two men agree about triangles, but most of them prefer the transparent ones, although they are invariably too thin for the best results. A good selection consists of a 16-inch, 30 and 60 degrees, a 10-inch, 30 and 60 degrees, and a 5-inch, 45 and 45 degrees, for all ordinary work. A set of scales, as shown in Fig. 26, is far superior to the ordinary triangular scale. This set comprises 7 scales, ¼, ¾, 1, 1½, 3, 6, 12 inches = 1 foot. The full size scale is not shown in the

cut. These scales are of the reverse bevel type, and both sides of each scale are graduated the same, but read from opposite ends. With this arrangement it is never necessary to more than turn the scale over to have it reading in the desired direction. The divided foot on the 1½- and 3-inch scales is marked 2-4-6, etc., instead of the usual 3-6-9, which makes it easier to find the desired point. The 6-inch scale is fully divided into 16ths and the 12-inch into 32ds. Scales of this kind,

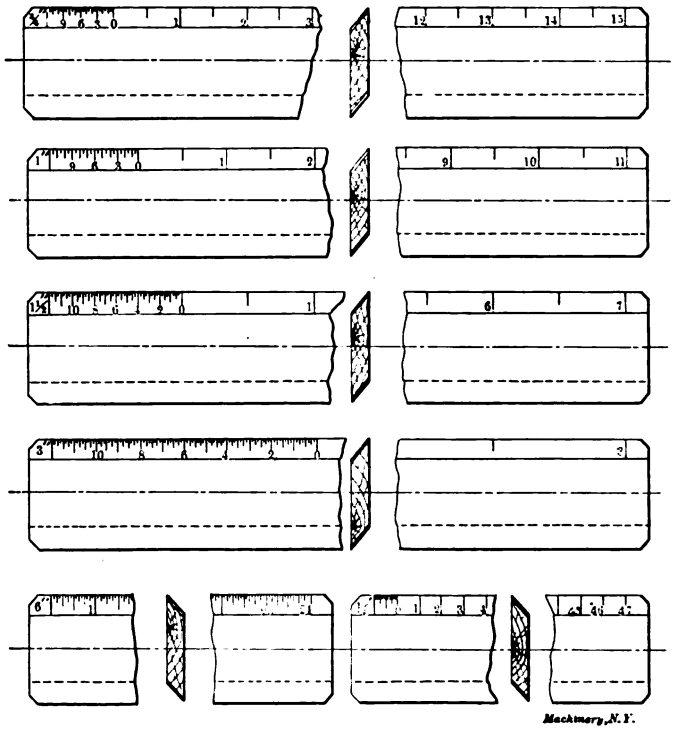

Fig. 26. Set of Draftsman's Scales

however, are made only to order by the firms manufacturing draftsman's scales.

A slide rule, a protractor, and a couple of curves complete the set of tools.

Special Draftsmen's Tools

While the set of tools described above is an excellent collection for general requirements, many draftsmen need special tools for special purposes. In the remaining portion of this chapter, a number of different tools and also a number of general drafting-room conveniences and devices are described, which will be found useful for the purposes for which they are intended. The descriptions of these tools have been contributed from time to time to the columns of MACHINERY, and the names of the contributors, together with the month and year

when the description was first published, will be found in notes at the foot of the pages.

Border Line Pen

The line cut, Fig. 27, and the half-tone, Fig. 28, illustrate a very efficient arrangement for a border line pen. It is made by taking a ruling pen, preferably one unfitted for further use, and fitting a piece

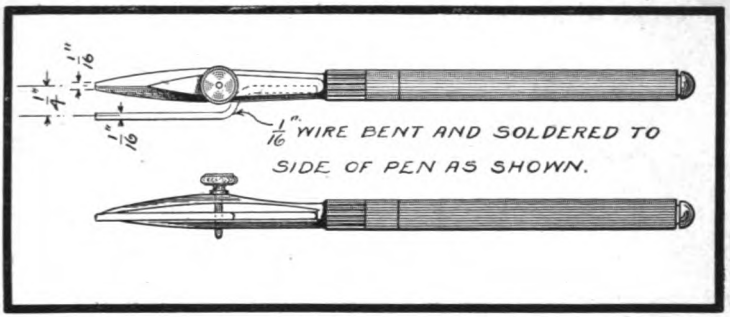

Fig. 27. Border Line Pen

of steel or spring brass wire in the middle of the pen and soldering it to the fixed half of the pen; then both pen and wire are ground off until the point of the former equals the standard width of line required, say one-sixteenth inch. Then the points are smoothed on an oilstone, by holding the pen perpendicular. By having a pen of this

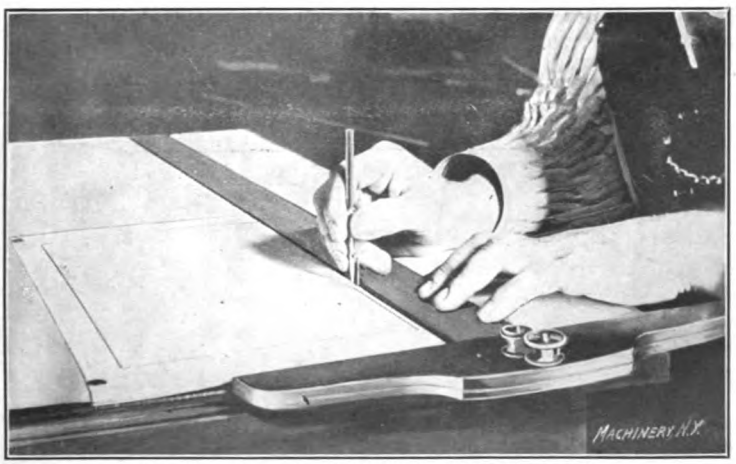

Fig. 28. Manner in which Border Line Pen is Held

kind in every drawing-room a uniform width of border line is fixed.

Fig. 23 shows the manner of holding the pen while using it; the pen is held perpendicular and with the wire against the T-square, which not only allows the draftsman to see what he is doing, but also prevents the ink from running under the edge of the T-square. The bor-

der around Fig. 27 was made by a border line pen of the description shown in the same figure.*

Attachment for Draftsman's Scale

Fig. 29 shows a very simple means of converting the ordinary draftsman's scale, graduated to 1/16 and 1/32 inch, as manufactured by the Brown & Sharpe Mfg. Co., into a scale that can be used for scaling or making drawings half size. The attachment consists of a narrow brass or steel strip with four or more pins inserted and riveted to it.

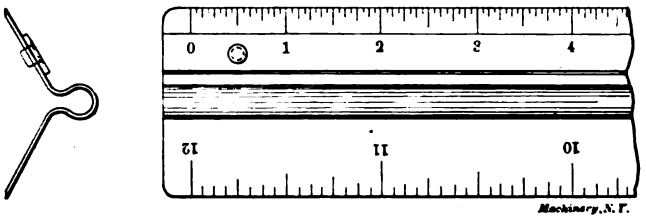

Fig. 29. Improvised Half-size Scale

These pins fit into holes which are drilled in the scale. A still better construction could be obtained by forming heads on the rivets, and having buttonhole slots in the scale. If it is desired to adapt the scale for half-size work, number each ½ inch consecutively as full inches. For quarter size, each ¼ inch should be consecutively numbered with whole numbers. Applied, as shown, on the 1/32-inch side, each graduation reads as 1/16 inch.

Scale for Beam Compass Bar

Beam compasses can be improved by placing a scale on the beam as shown in Fig. 30. A linen tape measure will answer the purpose.

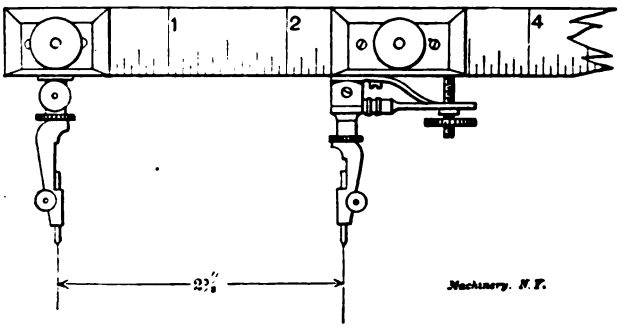

Fig. 30. Scale for Beam Compass Bar

A coat of shellac keeps it clean and the divisions distinct. The object of the graduations is simply to get the pencil point approximately set, the finer adjustment then being made.

Weighted T-square Head

The cut, Fig. 31, shows a T-square having a 1½-inch hole drilled in the upper part of the head, and a piece of steel inserted. The upper an-

* Albert C. Sharp July, 1906.

part of the head being the heaviest, it always tends to keep the upper edge of the blade down close to the board.*

Guide Strip for Drawing Board

A great many draftsmen are quite frequently troubled by lines drawn with a T-square not being parallel with each other at different points of the drawing board. This is invariably due to the fact that

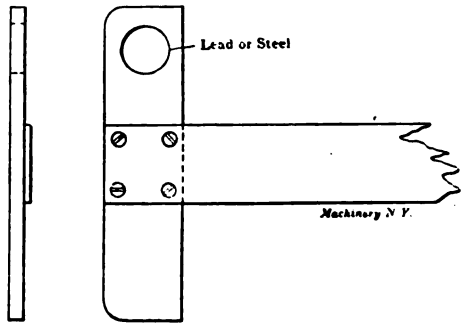

Fig. 31. T-square Head Weighted to Hold Down Upper Edge

the edge of the drawing board is seldom true. This trouble may be easily overcome by the application of the T-square guide shown in Fig. 32. The left-hand side of the drawing board is cut out 5/16 inch deep by 1⅝ inch wide, the full width of the board, and a bar of steel ⅜ inch by 1¾ inch, length to suit, is inserted; the latter is secured

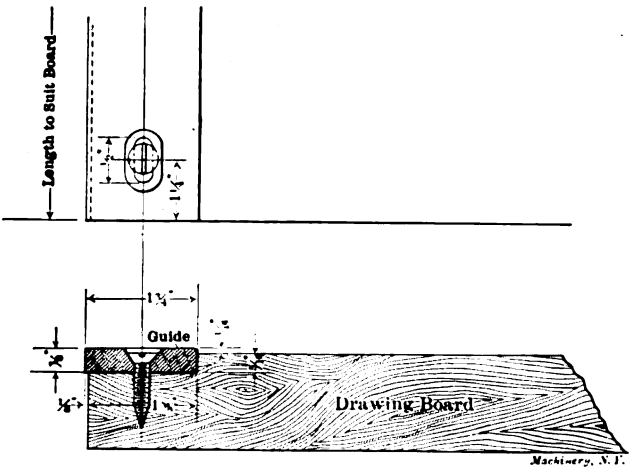

Fig. 32. Guide Strip for Drawing Board

by four screws, the holes for the screws being oblong to allow for any expansion or contraction of the drawing board. This guide, projecting ⅛ inch from the edge of the board, gives a smooth surface for the T-square head, and projecting 1/16 inch above the board, as shown,

* Gordon F. Monahan, August, 1906.

tends to keep the T-square blade just enough above the paper to keep the drawing paper, which is very often soiled by the shifting of the T-square, reasonably clean. Parallel lines at all points on the board are insured by the application of this guide.*

Arrangement for Holding T-square in Place

Fig. 33 shows a very simple, cheap and effective arrangement for holding the T-square against the edge of the drawing board. The materials needed are a small wooden grooved wheel, a sufficient length of heavy cord about 3/32 inch in diameter, a coiled spring to give suffi-

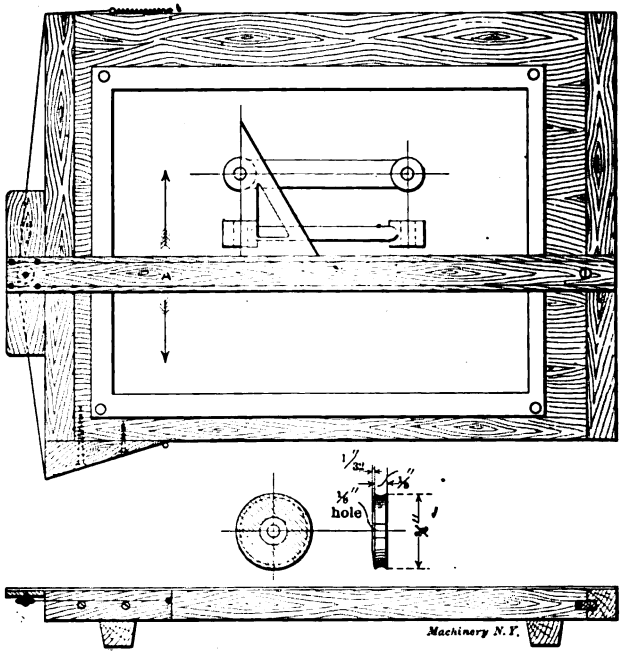

Fig. 33. Arrangement for Holding T-square in Place

cient tension to the cord, and a few screws, all arranged as shown in the cut. A strong rubber band can be used in place of the spring, but, of course, is short-lived. The wheel is fastened in the center of the under side of the T-square head. On small boards it may be advisable to fasten a small triangular block at the lower left-hand corner of the board so as to allow the T-square to be used when the drawing is near the edge of the board.

To one accustomed to the old method of moving the T-square by grasping the head and continually lining it up, the advantage of this simple device will be a surprise, as the T-square can be moved easily by applying the hand at *A*, about eight inches from the head, and when moved out of line it automatically returns to its proper place.

* T. C. Hassett, May, 1907.

An important advantage is, that in keeping the head snug against the edge of the board, the wear on the ends of the head where it slides on the board is avoided. This wear is caused on the ordinary T-square by the uneven pressure when sliding it up and down. The edge gradually becomes slightly curved, resulting in non-parallel lines on the drawing. Most draftsmen are not aware of this defect. The T-square is quickly detached by simply lifting it off the board, the cord slipping easily from the wheel. To find the proper tension for the cord, the T-square should be put in the center of the board, the cord fastened to the lower edge of board and brought around the wheel to a loop in the end of the spring which is fastened at the upper edge

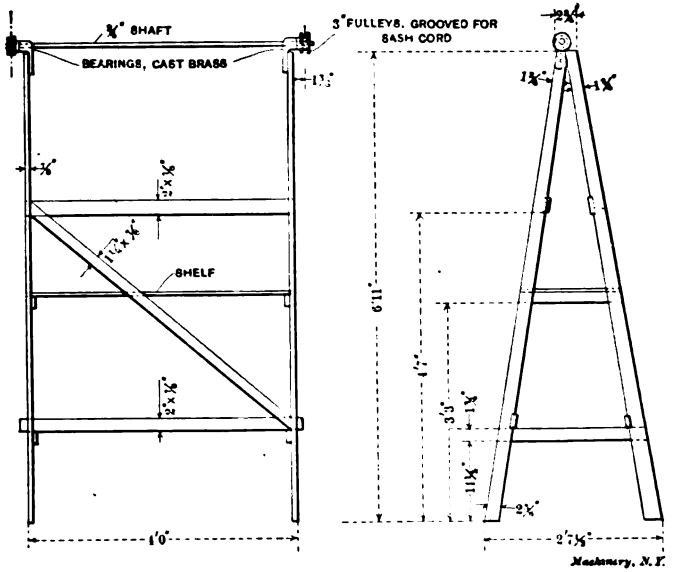

Fig. 34. Elevations of the Drawing Board Frame or Easel

of the board. Now swing the T-square around so that it lies at an angle of about 30 degrees to the center, keeping one end of the head against the edge and near the center of the board. Increase the tension on the cord until it is sufficient to cause the blade to swing quickly into place. In other words, it should be so tensioned that no matter in what position the T-square is left, it will immediately return to its proper position. This scheme can be applied to any common T-square up to 42 inches long, and, in fact, even to longer T-squares, provided a tension spring of proper dimensions is selected. Of course, it is preferable to use as light a T-square as possible. Note that the cord is not wound around the wheel, but simply bears on it exactly as trolley wire on a trolley wheel.

Large Compact Drawing Board

To meet the conditions requiring large capacity and minimum floor space, the board shown in Figs. 34 to 36 was built. The frame, or

easel, as artists would term it, is shown in Fig. 34. Only general dimensions are given, for such details as placing screws and making joints can be decided by the workman. The shaft, pulleys, and bearings, shown at the top, carry the counterweights needed to balance the drawing board. Fig. 35 shows the general dimensions of the board and straight-edge. The board is built of ⅞-inch stock in the usual manner, with a brace at each end and one in the middle. The end braces also act as guides, their centers coming in line with the center line of the pulleys on the shaft shown in Fig. 34. A 25-pound window-weight at each end serves as a counterbalance for the board which is thus easily raised or lowered.

The straight-edge requires care in making, as both the upper and

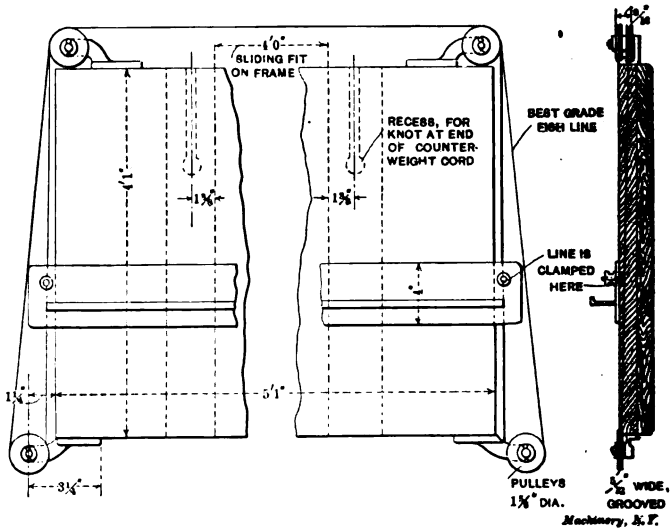

Fig. 35. Detail of the Drawing Board and Straight-edge

lower edges should be parallel. The projecting shelf is intended primarily as a brace, but it is also very handy for holding tools. By means of the line and small pulleys, shown in Figs. 35 and 36, the straight-edge is moved and kept in a parallel position at every point, the line being clamped at each end of the straight-edge by a brass screw and nut. The straight-edge is counterbalanced by a weight of cold-rolled steel hung from a cord attached just above the brass clamping nut.

The material used was as follows: 25 feet of pine, 15 feet of white wood, 2 pounds of brass used in the small pulleys and bearings, 53 pounds of cast iron in the drawing board counterweights and large pulleys, 4 pounds of cold-rolled steel 1 inch in diameter for the straight-edge counterweights, 7 pounds of cold-rolled steel ¾ inch in diameter for the shaft at the top of the frame, 25 feet of window cord, 35 feet of best quality fish line, and 3 dozen wood screws.

The time required to build this board depends, of course, on the skill of the workman. About 25 hours seems to be a good average time, a large part of which is spent in gluing the board. Foreign engineers say that this type of board is very generally used in Europe, and while at first sight a designer will usually disapprove of a vertical board, a few hours' trial will prove its merits.*

Draftsmen's Triangles

The triangle is such an important tool for the draftsman that it should be made as convenient as possible. The triangle shown in Fig. 37 is the result of a great deal of thought, and experimenting. The angles are 90, 75, 67½, 60, 45, 30, 22½, and 15 degrees, and each angle can be drawn from a light edge. The angles of the opening near the center are the same as the angles of the head of a countersunk screw.

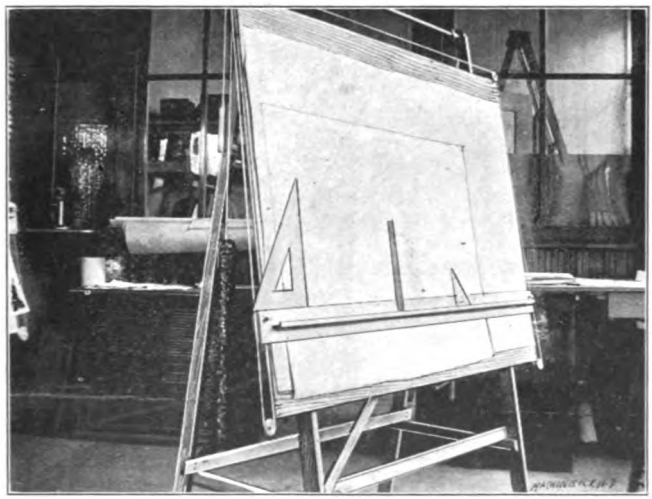

Fig. 36. Compact Drawing Board having Independent Vertical Adjustments for Board and Straight-edge

A 45-degree line scratched on the under side is very convenient, but great care must be used to have it accurate. This triangle has been made by a number of draftsmen, and all prefer it to the old 60- and 45-degree combination. It is particularly useful to the designing draftsman. It has, however, a disadvantage for inking, as a line drawn by a slot opening is liable to be blotted when the triangle is slipped along.

To make such a triangle, get a piece of celluloid 0.070 inch thick. Make a drawing of the triangle full size, and fasten the celluloid blank over it, so that the lines can be scratched as an aid to cutting. First, with a penknife start the openings, and, when large enough, use a hack-saw. Finish the edges with a file. After the slots have been worked out nearly to the finishing line it is a good plan to put the triangle away in a warm place for a couple of weeks, as it will shrink

* Ralph W. Davis, September, 1909.

so as to impair the accuracy of the angles. The dotted lines in the view to the right show how the celluloid will shrink. After the celluloid has finally set, very little care is required to keep the angles accurate.

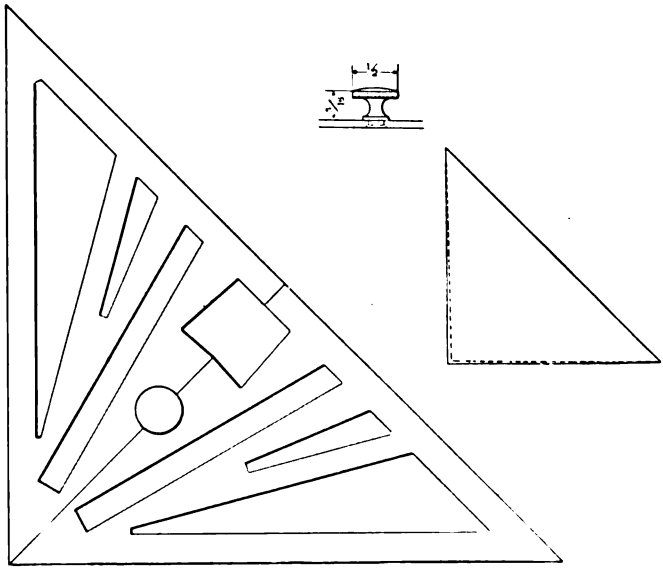

Fig. 37. Draftsman's Triangle

It is not necessary to tell a draftsman how to true up the outside edges. To true up the slot angles, the first thing to do is to draw a base line with the T-square. From this line lay off carefully all the angles that are on the triangle. With a file work out the slot edges

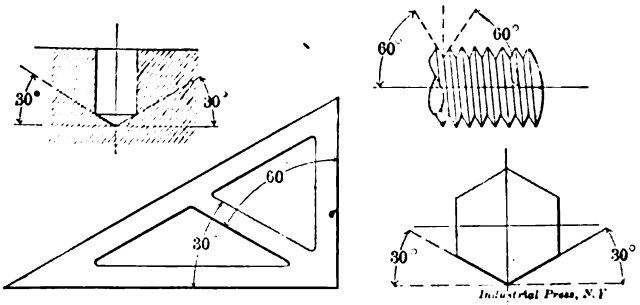

Fig. 38. A Handy Triangle

of the triangle so that, when laid against the T-square, the edges will match the drawn lines perfectly. Any waviness or inaccuracy is clearly shown by this method.

The knob should be riveted in, but do not hammer hard enough to

Digitized by Google

buckle the celluloid. The hollow side of the celluloid should be down, as the triangle will then lay flat.*

Fig. 38 shows another handy triangle of less elaborate design. It is a 30 by 60-degree triangle, having internal angles of the same degrees, but opposite to the external ones. With a triangle of this form hexagons, screw heads, the bottom of drilled holes, etc., can be easily and quickly drawn, as it is not necessary to reverse or turn over the tri-

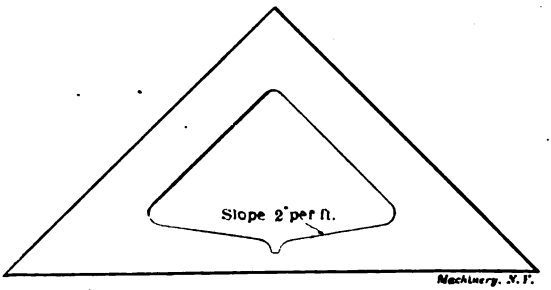

Fig. 39. Triangle for I-beam Sections

angle, but merely to slide it along. Every draftsman doing detail work will find this tool a valuable addition to his kit.

Triangle for Drawing I-beam Sections

Fig. 39 shows an alteration on an ordinary triangle which makes the drawing of the sections of I-beams and channels much easier than the usual way. The slant is that of the flanges of the standard rolled sections, i. e., 16 2/3 per cent or 2 inches per foot. This triangle is of

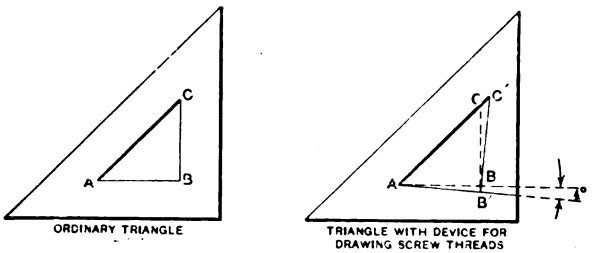

Figs. 40 and 41. Ordinary Triangle, and Triangle for Drawing Threads

service to those draftsmen who have some structural work to do, but not enough to warrant the purchase of a special triangle.†

Triangle for Drawing Threads

Most draftsmen have more or less trouble in drawing the common representation of small screw threads. The cuts, Figs. 41, 42, and 43 show a simple device which makes this operation much easier, quicker, and not so tiresome. The threads also can be made more uniform.

* W. L. Breath, November, 1907.
† Roger Del. French, October, 1905.

Any draftsman can make this tool himself. Take an ordinary celluloid triangle, as shown in Fig. 40, a 45-degree triangle is preferable as the opening, *A B C*, in the center is larger, but a 60-degree triangle can be used. First draw lines on the triangle as represented by the lines *A B'* and *B' C'* in Fig. 41. These lines can be scribed on with any

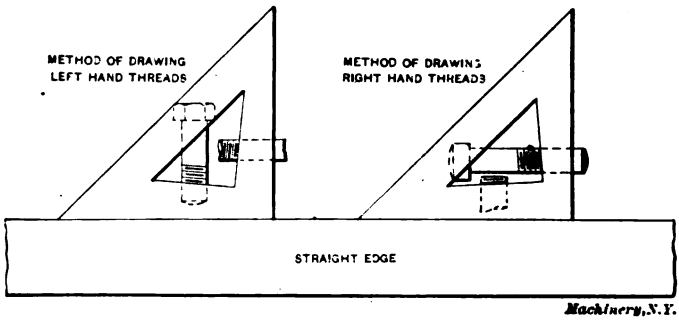

Figs. 42 and 43. Triangle in Fig. 41 used for Drawing Left- and Right-hand Threads

sharp instrument, and should be at an angle of about 4 degrees with the horizontal. Now take a sharp knife and cut away the celluloid very carefully until having almost cut down to the lines. Then take a fine file and finish off to the lines, making the edges smooth and straight. Either horizontal or vertical threads may be drawn with-

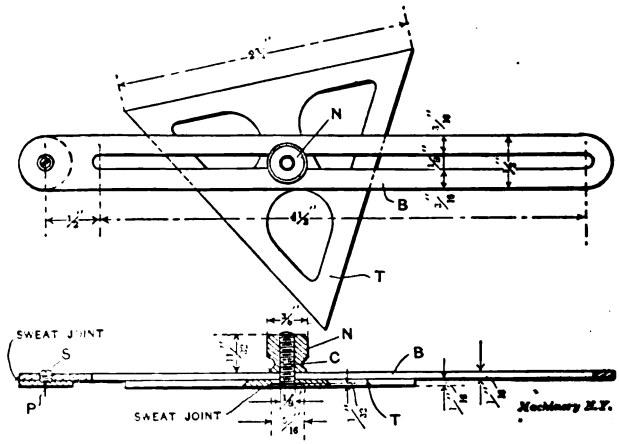

Fig. 44. Drafting Tool for Ratchet Teeth

out changing the position of the triangle, and right- or left-hand threads are drawn by simply turning it over.*

Tool for Laying Out Ratchet Teeth, Tangents, etc.

Fig. 44 shows a little instrument which is a great time-saver. It is used in putting in both radial lines and tangents about a given center,

* J. W. Coleman, August, 1906.

Digitized by Google

as in drawing the teeth of a ratchet wheel, etc. The slotted bar, *B*, has a pin, *P*, held in one end of it by the screw, *S;* this pin is stuck into the paper at the given center. The triangle, *T*, is shifted lengthwise on the bar and turned about the screw *C* until one of its sides

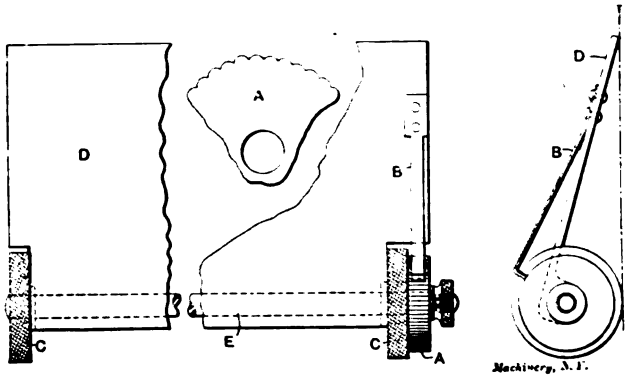

Fig. 45. Section Liner

takes the direction of the radial or tangent which it is desired to repeat about the center. The triangle is then clamped firmly in position on the bar by means of the knurled nut, *N*, and then, by swinging the entire instrument about the fixed pin, the edge of the triangle is brought to the successive positions at which it is desired to put in

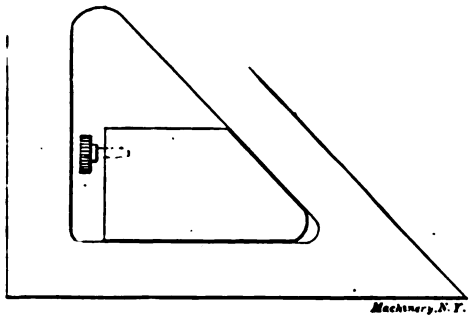

Fig. 46. Simple Section Liner

the required lines. The slotted bar, *B*, may be made longer than it is here shown, but, for nearly all ordinary drafting-room work, the length shown is sufficient.*

Section Liners

The device shown in Fig. 45 has given excellent results as a section liner. It is used on drawing paper entirely independent of a T-square. As seen from the cut, the device consists of a ratchet wheel *A*, a pawl spring *B*, two knurled rollers *C*, and the pen guide or ruler *D*. The teeth of the ratchet are milled as shown in the detailed view. The

* Claude T. Johnson, July, 1906.

ratchet and knurled rollers are fastened to the shaft *E*, and as the device is pulled back across the drawing paper for each line drawn, the ratchet pawl descends into each of the little grooves in the wheel, thus spacing the lines evenly. For different spacing, differently pitched ratchet wheels are used. By using thin rubber bands over the knurled rollers, the device will work well on tracing cloth.*

A much simpler section liner consists of an old instrument screw

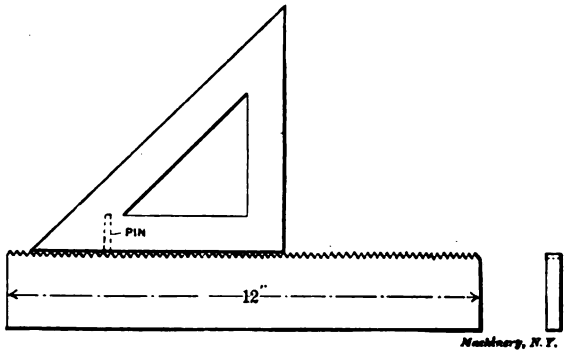

Fig 47. A Simple but Efficient Section Liner

turned into a slightly smaller hole in a piece of wood a little thicker than the diameter of the screw-head, and of such size that the two can be used in the central hole in a triangle as shown in Fig. 46. The screw provides for a very fine adjustment of the spacing.†

Fig. 47 shows the principle of a section liner which, although simple, answers the purpose fully as well as some of the more complicated and expensive arrangements. It consists of a piece of brass, or any metal, 12 inches long, with threads cut on one side as shown, about 40 threads to the inch, and a wooden triangle and a pin driven in as indicated and filed to fit the thread into which it is to engage.‡

* Charles A. Kelley, November, 1907.
† E. W. Beardsley, September, 1905.
‡ John H. Craigie, January, 1907.

CHAPTER IV

DRAFTING-ROOM KINKS

Pen Sharpening Arrangement

Fig. 48 shows a little arrangement that should prove very convenient in every drawing-room. This is a device used to facilitate the sharpening of drawing pens. A small wooden block, to which is attached a back, is all that is required. The stone is held in place by the left hand, and the pen, held by the thumb and forefinger of the right hand,

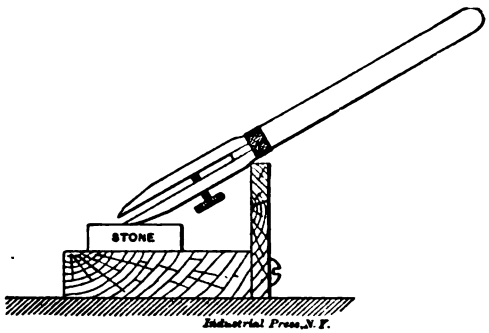

Fig. 48. Pen Sharpening Arrangement

is moved backward and forward and at the same time given a rocking motion so as to grind all of the point. In this way first one and then the other nib of the pen are given an ideal finish.

Tightening a Worn Thumb-nut

When the adjusting nuts on bow instruments become worn out, they can be squeezed onto the screw in a vise as shown in Fig. 49, and

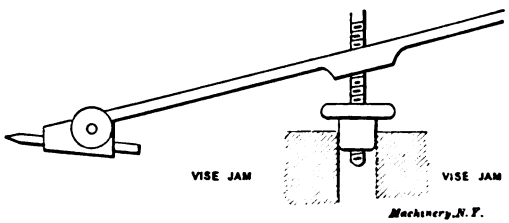

Fig. 49. Tightening a Thumb-nut

their useful life continued. This must be done very carefully or they will become too tight.*

* E. W. Beardsley, September, 1905.

Special Scales

A very convenient scale for one-half and one-quarter size work may be made by fastening strips of paper with shellac varnish just back of the graduations on a flat boxwood scale graduated full length with sixteenths on one edge and thirty-seconds on the other. On these strips the divisions are marked and lettered, making the scale divisions equal eighths on the proportional scale, as shown in Fig. 50.

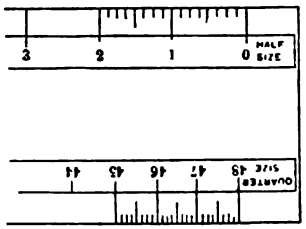

Fig. 50. Improvised Fractional Scales

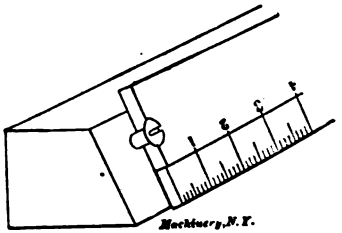

Fig. 51. Using a Machinist's Scale and Strips of Paper for Obtaining Fractional Scales

Similarly a machinist's scale may be used by wrapping a strip of heavy paper lengthwise around the scale and fastening the two, with a screw at each end, on a beveled strip of wood, as shown in Fig. 51. With machinists' scales graduated to twentieths, twenty-fourths, twenty-eighths, etc., various odd proportions may be obtained.*

Spacing Titles on Detail Work

A drafting-room kink which is very useful as a time-saver in spacing titles on detail work consists of a few needles and a small piece of wood turned as is shown in Fig. 52. Through one end a narrow

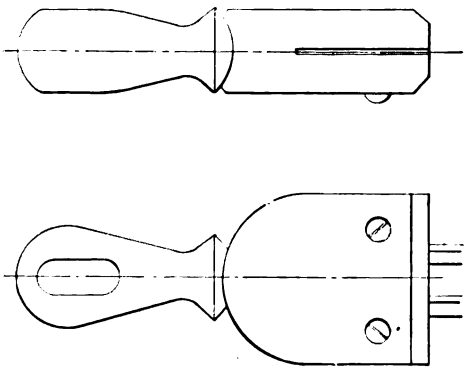

Tool for Spacing for Lettering on Drawings

saw cut is made about one inch deep. In this cut are inserted and spaced as many needles as are desired. The needles are bound in place by two round-head wood screws. The cut shows such a spacer set to mark for two lines of letters.†

* E. W. Beardsley, September, 1905.
† Raymond C. Williams, March, 1907.

Ink Bottle Holders

Ink bottle holders of various designs are constantly appearing in the technical press. In the following a number of the typical designs and suggestions are given, with a view of showing as many of the different designs as will satisfy all different requirements.

Fig. 53 shows a bracket holder, which is attached to the under side of the table by a single screw so that it may be swung around out of the way. This arrangement insures that the ink bottle is always in

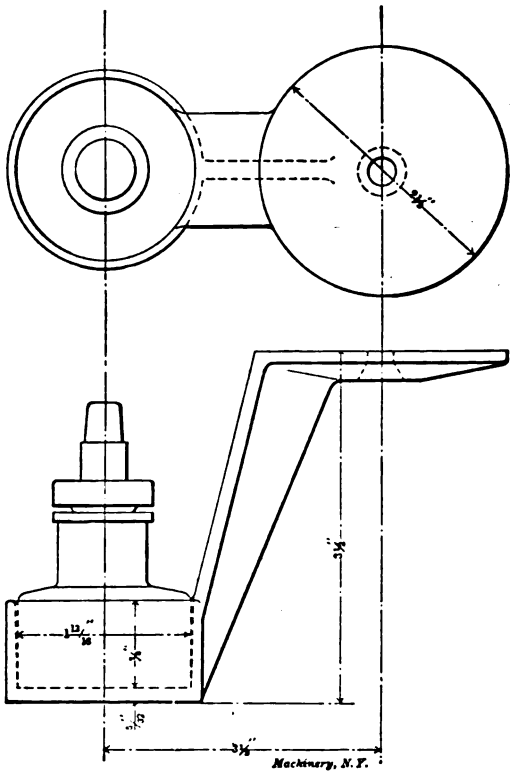

Fig. 53. Bracket-shaped Ink Bottle Holder

the right place; it also eliminates the liability of blotting the work when filling the pen. The danger of spilling the ink is also reduced to the minimum.*

A good and substantial ink bottle holder is shown in Fig. 54. To make an ink bottle holder of this description, take a block of wood about 3¾ x 7 inches and 1⅜ inch thick; have two holes bored in it part way, one at each end, to fit the ink bottles; also make a ½-inch hole for the quill; this will be found very convenient when lettering. Make a cup-shaped hole at a convenient place to put tacks into, and on one

* John Edgar, November, 1906.

side make a groove about $\frac{3}{4}$ inch wide to lay the lettering pens into; this completes the inkstand. It can be made at very small cost and presents a neat appearance.*

The greatest efficiency, however, often lies in the greatest simplicity.

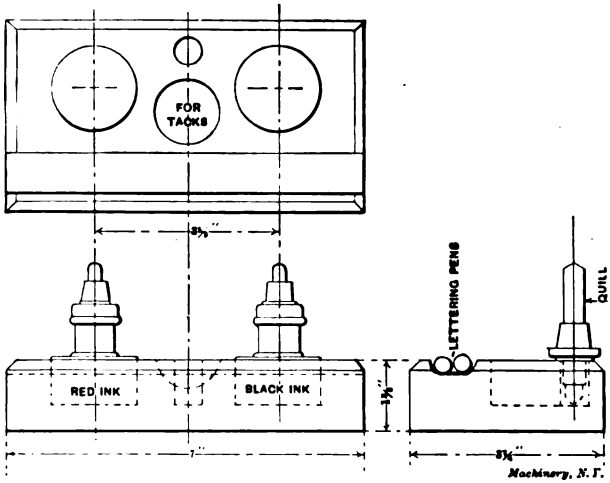

Fig. 54. Ink Bottle Holder

The illustration, Fig. 56, shows one of the most effective means of preventing what has always been a source of great annoyance to the draftsman, *viz.*, the overturning of the ink bottle. In the center of a

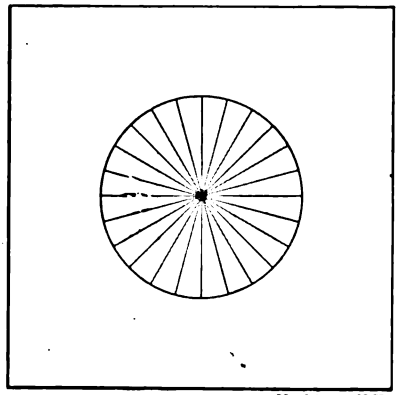

Fig. 55. Layout on Piece of Paper for Making Ink Bottle Holder in Fig. 56

four-inch square of ordinary drawing paper, scribe a circle equal to the diameter of the ink bottle. Divide the circle into about twenty-four parts as shown in Fig. 55, then, with a sharp knife, cut the paper from each of these twenty-four points to the center, following a radial line. Press the paper down over the neck of the bottle. Around the

* Peter Plantinga, February, 1907.

paper points, which stick up around the bottle like a picket fence, put six or eight ordinary elastic bands. Thumb tacks in opposite corners

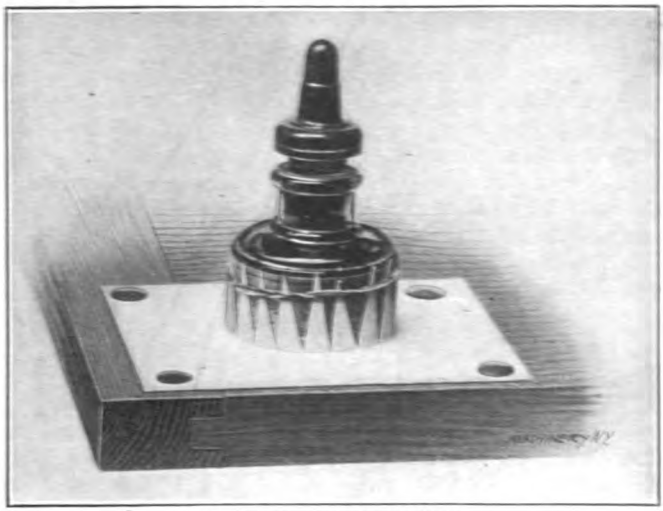

Fig. 56. Securing the Ink Bottle

will securely hold the entire outfit to any part of the board desired.*

Swinging Ink Bottle Holders

A more elaborate device, which has been found very satisfactory and convenient, is shown in Fig. 57. The line illustrations, Figs. 58 and

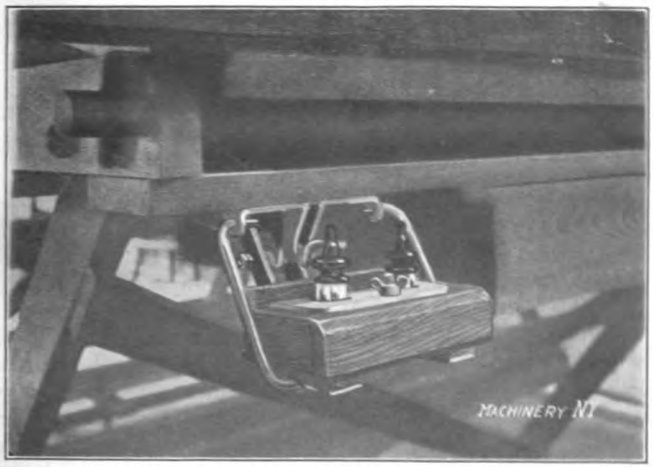

Fig. 57. Holder for Two Ink Bottles, which is easily swung out of the Way

59, show the construction with certain improvements over the original design shown in the half-tone.

* C. H. Ramsey, December, 1907.

The device illustrated may seem to have a great many parts, as compared, for instance, with a drawer, which is the first thing one would think of for the purpose; but a drawer on this folding drawing table would have been in the way, and a slide of ample length would have required more depth than was here available. This holder is located at the left side of the draftsman, and in the half-tone it is shown pulled out, affording ready access to either of the two ink bottles which are locked fast in it, and requiring one hand only for removing the filling quill. The bottles may be quickly removed for changing or renewing, by unscrewing the one thumb-nut and removing the brass retaining-plate in Fig. 57, the back edge of which slips into the recess in the wooden strip at the back. In the improved design this wooden strip is done away with, as is evident in the line drawing, ears being formed on the plates *B*, instead; also the thumb-nut and screw

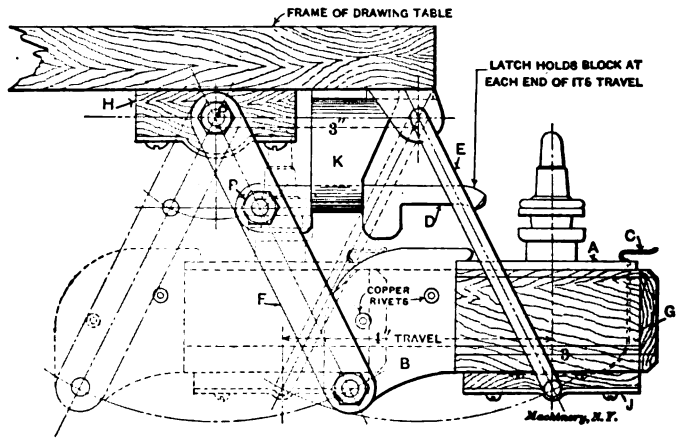

Fig. 58. Side Elevation of the Holder, showing the Inner and Outer Positions

have been superseded by a spring clip, *C*, making it still easier to remove the bottles.

After inking the pen, lifting the latch *D* with the tip of the finger enables the holder to be instantly pushed back out of the way; at the back end of the stroke the latch drops into place again and the swinging holder is retained there, entirely underneath the table and out of the way. The construction should be clear from the drawings, the marks or symbols used being the same in Figs. 58 and 59. The wooden parts of the holder are glued together, other fastening being afforded by the wood screws and the rivets indicated in the assembly drawing, Fig. 58. The portion of the drawing table to which the holder was attached is permanently horizontal, the drawing board, of variable slope, being pivoted above. Attachment was made by eight wood screws; of course, if desired it could be all attached to a separate block, permitting, in the event of shipment, removal without disassembling.*

* H. J. Kennedy, September, 1909.

To Prevent Lead Pencil from Breaking

A small shell partly filled with a piece of lead, steel, or shot, as shown in Fig. 60, and forced on the end of a drawing pencil, may

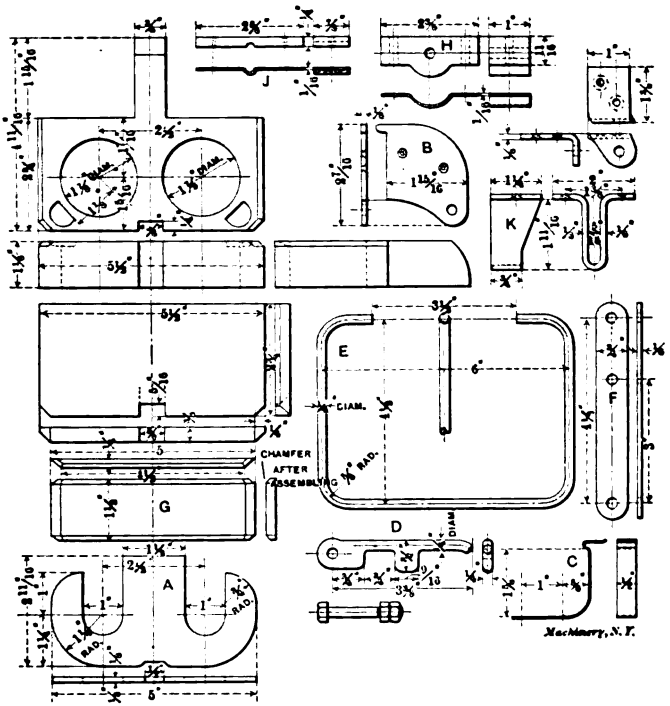

Fig 59. Details of the Swinging Holder shown in Figs. 57 and 58

appear to be a queer contrivance; but this end being the heaviest will naturally fall to the floor first and will prevent the lead from breaking.*

To Remove Ink Lines from Tracings

Place the part of the tracing, containing the line to be erased, upon some hard substance, such as a celluloid triangle, and run over it lightly with a razor-edged knife; this leaves the cloth in rather a

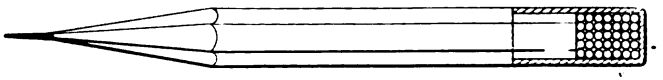

Fig. 60. Kink for Preventing Lead Pencil from Breaking

rough condition, which will be readily taken hold of by a medium hard eraser. The tracing may then be smoothed down by using the rounded edge of a knife handle or its equivalent, and will then take the ink without causing the latter to run.†

* Gordon F. Monahan, September, 1907.
† Calvin B. Ross, April, 1906.

Smoothing Wrinkled Blue-prints

Fig. 61 shows a method of "ironing" soiled or wrinkled blue-prints after they are dry. The wrinkled print is laid in a cabinet drawer with just enough of it outside to conveniently hold in the hands, and

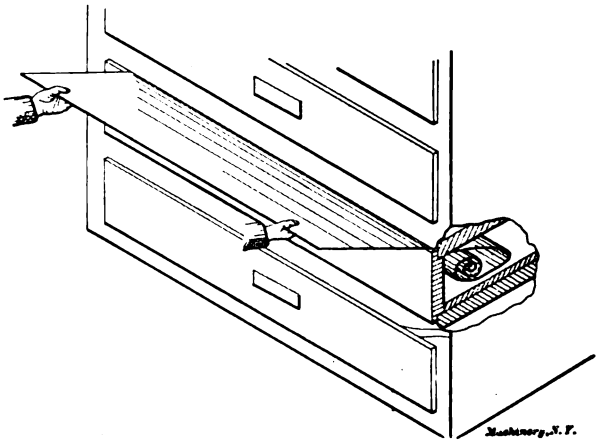

Fig. 61. Smoothing Wrinkled Blue-prints

the drawer is tightly closed. After being pulled out, the print is perfectly smooth. The angle of pull should be adjusted to the strength of the paper. Pulling through once will, of course, cause the print

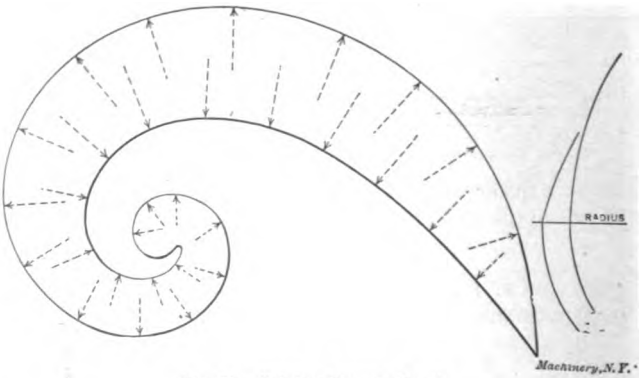

Fig. 62. Joining Curves Neatly

to roll up, when released; if this is not desirable, and the print is wanted to lie flat, reverse the print, and pull through once more.*

To Clean a Tracing

Tracings soon show the results of frequent use by becoming soiled, which, while causing them to look bad, at the same time makes it impossible to take good, nice, clear blue-prints from them. Oftentimes changes and corrections are "penciled in" on a tracing before inking

* Howard D. Yoder, October, 1907.

in. This leaves a confusion of penciled lines and figures. All this can be easily removed by lightly rubbing the soiled portions with a cloth which has first been saturated with benzine or gasoline. This, while cleaning the tracing thoroughly, will not effect the ink (provided waterproof ink is used), and makes the tracing look almost like new.*

Joining Curves Neatly

There is only one condition under which the end of a curve can be joined neatly to another curve, or to a straight line, so that the two lines shall flow neatly together—and that is where both the lines are

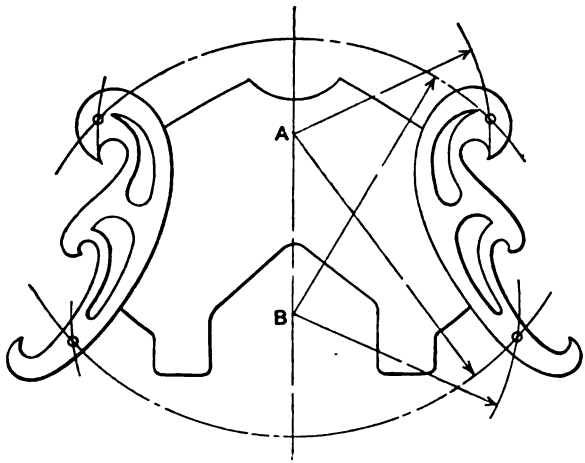

Machinery, N.Y.

Fig. 63. Drawing Symmetrical Reverse Curves

tangent to the same radius at the point of meeting. In any other case there will be a break or sharp place which will be very apparent to the eye; and further, a piece made after the drawing will not be so strong as though the curve flowed regularly. The difference in strength may be hardly calculable, but is there, all the same, and the appearance will always be better where this rule is followed.

There is a very simple way to attain this desired end, and that is to draw at various points on the wooden or other templets, which are used for making simple or compound non-circular curves, radii (or in the case of concave curves, prolongations of radii) to the curve, that is, lines at right angles to the curves at the points chosen. In Fig. 62 is shown a logarithmic spiral templet with such radii and prolonged radii marked thereon, together with (to the right) a compound curve drawn therewith without reference to the rule, and one properly drawn.†

To Draw Symmetrical Reverse Curves

In drawing a symmetrical figure which requires a right-hand and left-hand curved line, some difficulty may be experienced, especially if

* R. F. Kiefer, March, 1906.
† Robert Grimshaw, July, 1907.

this for some time puts the curve in a bad shape, and it becomes hard to discern which mark was put down last. It is hard to put marks on the rubber or celluloid curves, so the following method of using curves of any material seems to be far better.

As can be seen in Fig. 63, there is a hole about 1/16 inch diameter put in each end of the curve. In use, the curve is laid on the drawing, the location of the holes marked with a pencil point, and the desired curve drawn. On the center line of the piece to be drawn, select two centers, as *A* and *B*, and from them locate the positions of the holes in the opposite side. Place the holes in the curve over these points and the curve is in the reversed position. The method is simple; in fact, it takes a much longer time to explain it than to follow it.

Graduated Curve for Drawing Symmetrical Lines

Many curves drawn by means of the so-called French curve, such as the ellipse, hyperbola and parabola, require that the same parts of the

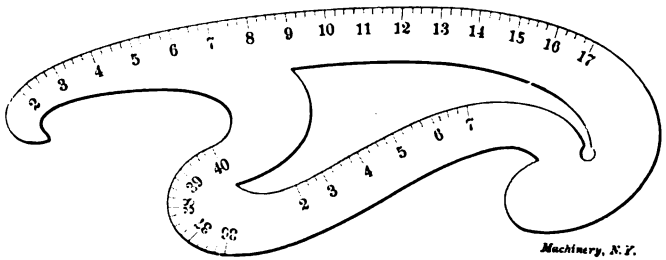

Fig. 64. Draftsman's Graduated Curve

French curve are used on each side of the axis of symmetry. The regularity of the curve and the degree of perfection of the symmetry will then depend on one's ability to reproduce in proper sequence on one side of the curve the parts of the curve used when previously drawing the other side. Fig. 64 shows a curve graduated on its edges with some arbitrary divisions, say in eighths. At every fourth one of these divisions a number is placed, starting with 1 at any convenient point on the curve and increasing by one until the graduations come back to the starting point. If the curve is made of celluloid the figures may be put on in black, so that when the curve is turned over with the figures down, they can be seen readily. If the curve is made of an opaque substance the numbers must be put on both sides. The numbers on the back should exactly coincide with the numbers on the face, and should proceed around the curve in the same order. In the cut the graduations are not shown all around the edges of the curve, but in graduating a curve they should, of course, be carried all around.

Attachment for Drawing Circles with Large Radii

In laying out work, it is often necessary to locate a center or some other point beyond the scope of the average-sized drafting-board. Fig.

65 illustrates a simple device that has been found to meet the requirements when such occasion arises. If the attachment is made according to the dimensions given, it will fit any board up to 1⅛ inch in thickness.*

Drafting-table Pencil-holder

The pencil-holder shown in Fig. 66 may be made of either wood, or aluminum. A very pretty effect is secured by making it of ½-inch strips of maple and cherry alternating. As an eight-degree tilt is a

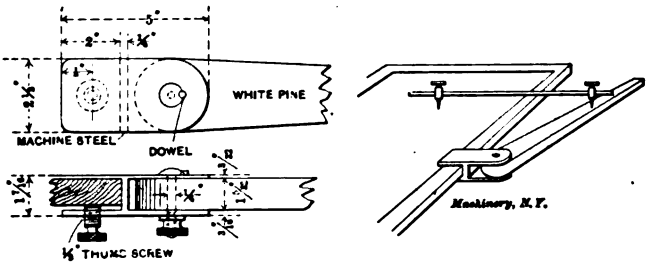

Fig. 65. A Handy Attachment for Drawing Circles with Large Radii

convenient one for a table, this holder is made with the same angle so as to keep the pencils from slipping out. By having sandpaper on the bottom, it can be used on a table that is considerably tilted by turning it around and having the cleat down. Nearly all draftsmen are

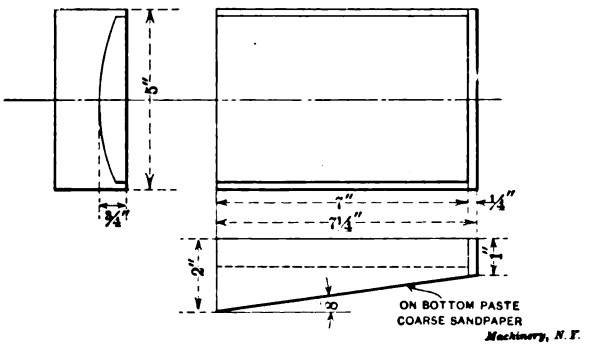

Fig. 66. A Drafting-table Pencil-holder

subject to annoyances arising from having their pencils and pens scattered all over the table; this holder, as can readily be seen, will remedy that.†

Restoring Over-exposed Blue-prints

Dissolve a quarter pound of potassium bi-chromate (a reddish crystal) in a gallon of water, and place the solution in a tray beside the wash tank. If a print is over-exposed or "burned," it is first placed in this solution and then washed in clear water; in this way a print

* W. L. Van Ness, June, 1909.
† E. G. Peterson, October, 1909.

from two to ten times the required exposure, responds to the above treatment. The solution keeps indefinitely, if a few crystals and also water are occasionally added when required.*

Miscellaneous Hints for the Drafting-room

It is sometimes desired to make a tracing of cuts from catalogues, books, etc., and to do this without removing the page. Perhaps it is not well known that by wetting the edges of the starchy side of tracing cloth, and rubbing it on the page, it will adhere firmly enough so that the tracing can be made on the dull side without much trouble.

In drawing a number of circles or arcs from the same center it is best to glue a small piece of paper over the center to hold the point of the compass leg. This will obviate the likelihood of making an unsightly hole in the drawing paper. The best way is to have a supply of these "centers" on hand, which can be made from a piece of waste drawing paper. A thin coating of glue is spread on the paper, and when dry it is ready for use; when needed, a small piece is cut off, moistened, and fastened to the drawing paper. It can be easily removed from the sheet with the blade of a penknife, and the little glue which remains on the paper can be removed by the application of a rubber ink eraser.

It is a good plan when leaving a tracing on the board at night to remove all the tacks from the drawing and tracing except the one which is in the center of the top edge and the one which is in the center of the bottom edge. This allows it to go and come and to be tightened readily in the morning.

In spacing a line for screw threads, when it is desired to represent the V, the thread gage furnishes the means as well as anything could; simply choose the pitch and make the impressions.

When lines on an outer circle are to be drawn tangent to an inner circle, a cardboard disk is a good substitute for the eccentrolinead, and is as much better than a circle as is a pin put in the center for radiating lines, than a lead pencil point.

It is well to have a piece of blotting paper 2 x 3 inches hung on the wall, for, when it is needed, it is wanted in a hurry, and this makes a convenient place for it.

A small flat oil-can with screw top is very convenient to have among the draftsman's kit; if oil is used frequently on the screws and nuts of instruments they not only work better, but last much longer.

* Ralph W. Davis, October, 1909.

No. 39. Fans, Ventilation and Heating.—Fans; Heaters; Shop Heating.

No. 40. Fly-Wheels.—Their Purpose, Calculation and Design.

No. 41. Jigs and Fixtures, Part I.—Principles of Jig and Fixture Design; Drill and Boring Jig Bushings; Locating Points; Clamping Devices.

No. 42. Jigs and Fixtures, Part II.—Open and Closed Drill Jigs.

No. 43. Jigs and Fixtures, Part III.—Boring and Milling Fixtures.

No. 44. Machine Blacksmithing.—Systems, Tools and Machines used.

No. 45. Drop Forging.—Lay-out of Plant; Methods of Drop Forging; Dies.

No. 46. Hardening and Tempering.—Hardening Plants; Treating High-Speed Steel; Hardening Gages; Hardening Kinks.

No. 47. Electric Overhead Cranes.—Design and Calculation.

No. 48. Files and Filing.—Types of Files; Using and Making Files.

No. 49. Girders for Electric Overhead Cranes.

No. 50. Principles and Practice of Assembling Machine Tools, Part I.

No. 51. Principles and Practice of Assembling Machine Tools, Part II.

No. 52. Advanced Shop Arithmetic for the Machinist.

No. 53. Use of Logarithms and Logarithmic Tables.

No. 54. Solution of Triangles, Part I.—Methods, Rules and Examples.

No. 55. Solution of Triangles, Part II.—Tables of Natural Functions.

No. 56. Ball Bearings.—Principles of Design and Construction.

No. 57. Metal Spinning.—Machines, Tools and Methods Used.

No. 58. Helical and Elliptic Springs.—Calculation and Design.

No. 59. Machines, Tools and Methods of Automobile Manufacture.

No. 60. Construction and Manufacture of Automobiles.

No. 61. Blacksmith Shop Practice.—Model Blacksmith Shop; Welding; Forging of Hooks and Chains; Miscellaneous Appliances and Methods.

No. 62. Hardness and Durability Testing of Metals.

No. 63. Heat Treatment of Steel.—Hardening, Tempering and Case-Hardening.

No. 64. Gage Making and Lapping.

No. 65. Formulas and Constants for Gas Engine Design.

MACHINERY'S DATA SHEET SERIES

MACHINERY'S Data Sheet Books include the well-known series of Data Sheets originated by MACHINERY, and issued monthly as supplements to the publication; of these Data Sheets over 500 have been published, and 6,000,000 copies sold. Revised and greatly amplified, they are now presented in book form, kindred subjects being grouped together. The purchaser may secure either the books on those subjects in which he is specially interested, or, if he pleases, the whole set at one time. The price is 25 cents a book.

The reliability of MACHINERY'S Data Sheets has been fully established by years and years of actual use in machine-building plants and drafting-rooms everywhere. The number of corrections it was found necessary to make in the old Data Sheets during the thorough editorial revision preceding publication in book form was relatively insignificant; but the value of the original Data Sheets has been greatly enhanced by the additional new material, never before published, by the careful arrangement and grouping together of kindred subjects, and by the helpful explanatory notes. It is the aim of the publishers to make these books absolutely authentic as reference books, notwithstanding the low price at which they are sold.

In combination with MACHINERY'S Reference Series these Data Sheet Books offer draftsmen, mechanical engineers and machinists an unusual opportunity to secure a complete working library of indispensable material.

CONTENTS OF DATA SHEET BOOKS

No. 1. Screw Threads.—United States, Whitworth, Sharp V- and British Association Standard Threads; Briggs Pipe Thread; Oil Well Casing Gages; Fire Hose Connections; Acme Thread; Worm Threads; Metric Threads; Machine, Wood, and Lag Screw Threads; Carriage Bolt Threads, etc.

No. 2. Screws, Bolts and Nuts.—Fillister-head, Square-head, Headless, Collar-head and Hexagon-head Screws; Standard and Special Nuts; T-nuts, T-bolts and Washers; Thumb Screws and Nuts; A. L. A. M. Standard Screws and Nuts; Machine Screw Heads; Wood Screws; Tap Drills; Lock Nuts; Eye-bolts, etc.

No. 3. Taps and Dies.—Hand, Machine, Tapper and Machine Screw Taps; Taper Die Taps; Sellers Hobs; Screw Machine Taps; Straight and Taper Boiler Taps; Stay-bolt, Washout, and Patch-bolt Taps; Pipe Taps and Hobs; Solid Square, Round Adjustable and Spring Screw Threading Dies.

(See back cover for additional titles)

Mills and Angular Cutters, etc.

No. 5. Spur Gearing.—Diametral and Circular Pitch; Dimensions of Spur Gears; Tables of Pitch Diameters; Odontograph Tables; Rolling Mill Gearing; Strength of Spur Gears; Horsepower Transmitted by Cast-iron and Rawhide Pinions; Design of Spur Gears; Weight of Cast-iron Gears; Epicyclic Gearing.

No. 6. Bevel, Spiral and Worm Gearing.—Rules and Formulas for Bevel Gears; Strength of Bevel Gears; Design of Bevel Gears; Rules and Formulas for Spiral Gearing; Tables Facilitating Calculations; Diagram for Cutters for Spiral Gears; Rules and Formulas for Worm Gearing, etc.

No. 7. Shafting, Keys and Keyways.—Horsepower of Shafting; Diagrams and Tables for the Strength of Shafting; Forcing, Driving, Shrinking and Running Fits; Woodruff Keys; United States Navy Standard Keys; Gib Keys; Milling Keyways; Duplex Keys.

No. 8. Bearings, Couplings, Clutches, Crane Chain and Hooks. Pillow Blocks; Babbitted Bearings; Ball and Roller Bearings; Clamp Couplings; Plate Couplings; Flange Couplings; Tooth Clutches; Crab Couplings; Cone Clutches; Universal Joints; Crane Chain; Chain Friction; Crane Hooks; Drum Scores.

No. 9. Springs, Slides and Machine Details.—Formulas and Tables for Spring Calculations; Machine Slides; Machine Handles and Levers; Collars; Hand Wheels; Pins and Cotters; Turn-buckles, etc.

No. 10. Motor Drive, Speeds and Feeds, Taper Turning, and Boring Bars.—Power required for Machine Tools; Cutting Speeds and Feeds for Carbon and High-speed Steel; Screw Machine Speeds and Feeds; Heat Treatment of High-speed Steel Tools; Taper Turning; Change Gearing for the Lathe; Boring Bars and Tools, etc.

No. 11. Milling Machine Indexing, Clamping Devices and Planer Jacks. Tables for Milling Machine Indexing; Change Gears for Milling Spirals; Angles for setting Indexing Head when Milling Clutches; Jig Clamping Devices; Straps and Clamps; Planer Jacks.

No. 12. Pipe and Pipe Fittings.—Pipe Threads and Gages; Cast-iron Fittings;

No. 14. Locomotive and Railway Data.—Locomotive Boilers; Bearing Pressures for Locomotive Journals; Locomotive Classifications; Rail Sections; Frogs, Switches and Cross-overs; Tires; Tractive Force; Inertia of Trains; Brake Levers; Brake Rods, etc.

No. 15. Steam and Gas Engines.—Saturated Steam; Steam Pipe Sizes; Steam Engine Design; Volume of Cylinders, Stuffing Boxes; Setting Corliss Engine Valve Gears; Condenser and Air Pump Data; Horsepower of Gasoline Engines, Automobile Engine Crankshafts, etc.

No. 16. Mathematical Tables.—Squares of Mixed Numbers; Functions of Fractions; Circumference and Diameters of Circles; Tables for Spacing off Circles; Solution of Triangles; Formulas for Solving Regular Polygons; Geometrical Progression, etc.

No. 17. Mechanics and Strength of Materials.—Work; Energy; Centrifugal Force; Center of Gravity; Motion; Friction; Pendulum; Falling Bodies; Strength of Materials; Strength of Flat Plates; Ratio of Outside and Inside Radii of Thick Cylinders, etc.

No. 18. Beam Formulas and Structural Design. Beam Formulas; Sectional Moduli of Structural Shapes; Beam Charts; Net Areas of Structural Angles; Rivet Spacing; Splices for Channels and I-beams; Stresses in Roof Trusses, etc.

No. 19. Belt, Rope and Chain Drives.—Dimensions of Pulleys; Weights of Pulleys; Horsepower of Belting; Belt Velocity; Angular Belt Drives; Horsepower transmitted by Ropes; Sheaves for Rope Drive; Bending Stresses in Wire Ropes; Sprockets for Link Chains; Formulas and Tables for Various Classes of Driving Chain.

No. 20. Wiring Diagrams, Heating and Ventilation, and Miscellaneous Tables.—Typical Motor Wiring Diagrams; Resistance of Round Copper Wire; Rubber Covered Cables; Current Densities for Various Contacts and Materials; Centrifugal Fan and Blower Capacities; Hot Water Main Capacities; Miscellaneous Tables; Decimal Equivalents, Metric Conversion Tables, Weights and Specific Gravity of Metals, Weights of Fillets, Drafting-room Conventions, etc.

MACHINERY, the monthly mechanical journal, originator of the Reference and Data Sheet Series, is published in four editions—the *Shop Edition*, $1.00 a year; the *Engineering Edition*, $2.00 a year; the *Railway Edition*, $2.00 a year, and the *Foreign Edition*, $3.00 a year.

The Industrial Press, Publishers of MACHINERY,

49-55 Lafayette Street, New York City, U. S. A.

MACHINERY'S
REFERENCE SERIES

EACH NUMBER IS ONE UNIT IN A COMPLETE LIBRARY OF MACHINE DESIGN AND SHOP PRACTICE REVISED AND REPUBLISHED FROM MACHINERY

No. 9

A Dollar's Worth of Condensed Information

Designing and Cutting Cams

THIRD EDITION—REVISED AND ENLARGED

Price 25 Cents

CONTENTS

The Drafting of Cams, by LOUIS ROUILLION - - 3
Cam Curves, by ARTHUR B. BABBITT and F. H. SIBLEY 18
Notes on Cam Design and Cam Cutting, by JAMES L. DINNANY - - - - - - - - - - 30
Cutting Master Cams, by HERBERT C. BARNES - 37
Suggestions in Cam Making - - - - - - - 42

The Industrial Press, 49-55 Lafayette Street, New York
Publishers of MACHINERY

COPYRIGHT, 1911, THE INDUSTRIAL PRESS, NEW YORK

MACHINERY'S REFERENCE SERIES

This treatise is one unit in a comprehensive Series of Reference books originated by MACHINERY, and including an indefinite number of compact units, each covering one subject thoroughly. The whole series comprises a complete working library of mechanical literature in which the Mechanical Engineer, the Master Mechanic, the Designer, the Machinist and Tool-maker will find the special information he wishes to secure, selected, carefully revised and condensed for him. The books are sold singly or in complete sets, as may be desired. The price of each book is 25 cents.

LIST OF REFERENCE BOOKS

No. 1. Worm Gearing.—Calculating Dimensions for Worm Gearing; Hobs for Worm Gears; Location of Pitch Circle; Self-Locking Worm Gearing, etc.

No. 2. Drafting-Room Practice.—Drafting-Room System; Tracing, Lettering and Mounting; Card Index Systems.

No. 3. Drill Jigs.—Elementary Principles of Drill Jigs; Drilling Jig Plates; Examples of Drill Jigs; Jig Bushings; Using Jigs to Best Advantage.

No. 4. Milling Fixtures.—Elementary Principles of Milling Fixtures; Collection of Examples of Milling Fixture Design, from practice.

No. 5. First Principles of Theoretical Mechanics.

No. 6. Punch and Die Work.—Principles of Punch and Die Work; Suggestions for the Making and Use of Dies; Examples of Die and Punch Design.

No. 7. Lathe and Planer Tools.—Cutting Tools for Planer and Lathe; Boring Tools; Shape of Standard Shop Tools; Forming Tools.

No. 8. Working Drawings and Drafting-Room Kinks.

No. 9. Designing and Cutting Cams.—Drafting of Cams; Cam Curves; Cam Design and Cam Cutting; Suggestions in Cam Making.

No. 10. Examples of Machine Shop Practice.—Cutting Bevel Gears with Rotary Cutters; Making a Worm-Gear; Spindle Construction.

No. 11. Bearings.—Design of Bearings; Causes of Hot Bearings; Alloys for Bearings; Friction and Lubrication; Friction of Roller Bearings.

No. 12. Mathematics of Machine Design.—Compiled with special reference to shafting and efficiency of hoisting machinery.

No. 13. Blanking Dies.—Making Blanking Dies; Blanking and Piercing Dies Construction of Split Dies; Novel Ideas in Die Making.

No. 14. Details of Machine Tool Design.—Cone Pulleys and Belts; Strength of Countershafts; Tumbler Gear Design; Faults of Iron Castings.

No. 15. Spur Gearing.—Dimensions: Design; Strength; Durability.

No. 16. Machine Tool Drives.—Speeds and Feeds of Machine Tools; Geared or Single Pulley Drives; Drives for High Speed Cutting Tools.

No. 17. Strength of Cylinders—Formulas, Charts, and Diagrams.

No. 18. Shop Arithmetic for the Machinist.—Tapers; Change Gears; Cutting Speeds; Feeds; Indexing; Gearing for Cutting Spirals; Angles.

No. 19. Use of Formulas in Mechanics.—With numerous applications.

No. 20. Spiral Gearing.—Rules, Formulas, and Diagrams, etc.

No. 21. Measuring Tools.—History and Development of Standard Measurements; Special Calipers; Compasses; Micrometer Tools; Protractors, etc.

No. 22. Calculation of Elements of Machine Design.—Factor of Safety; Strength of Bolts; Riveted Joints; Keys and Keyways; Toggle-joints.

No. 23. Theory of Crane Design.—Jib Cranes; Calculation of Shaft, Gears, and Bearings; Force Required to Move Crane Trolleys; Pillar Cranes.

No. 24. Examples of Calculating Designs.—Charts in Designing; Punch and Riveter Frames; Shear Frames; Billet and Bar Passes; etc.

No. 25. Deep Hole Drilling.—Methods of Drilling; Construction of Drills.

No. 26. Modern Punch and Die Construction.—Construction and Use of Subpress Dies; Modern Blanking Die Construction; Drawing and Forming Dies.

No. 27. Locomotive Design, Part I.—Boilers, Cylinders, Pipes and Pistons.

No. 28. Locomotive Design, Part II.—Stephenson Valve Motion; Theory, Calculation and Design of Valve Motion; The Walschaerts Valve Motion.

No. 29. Locomotive Design, Part III.—Smokebox; Exhaust Pipe; Frames; Cross-heads; Guide Bars; Connecting-rods; Crank-pins; Axles; Driving-wheels.

No. 30. Locomotive Design, Part IV.—Springs, Trucks, Cab and Tender.

No. 31. Screw Thread Tools and Gages.

No. 32. Screw Thread Cutting.—Lathe Change Gears; Thread Tools; Kinks.

No. 33. Systems and Practice of the Drafting-Room.

No. 34. Care and Repair of Dynamos and Motors.

No. 35. Tables and Formulas for Shop and Drafting-Room.—The Use of Formulas; Solution of Triangles; Strength of Materials; Gearing; Screw Threads; Tap Drills; Drill Sizes; Tapers; Keys; Jig Bushings, etc.

No. 36. Iron and Steel.—Principles of Manufacture and Treatment.

No. 37. Bevel Gearing.—Rules and Formulas; Examples of Calculation; Tooth Outlines; Strength and Durability; Design; Methods of Cutting Teeth.

No. 38. Grinding and Grinding Machines.

(See inside back cover for additional titles)

MACHINERY'S REFERENCE SERIES

EACH NUMBER IS ONE UNIT IN A COMPLETE LIBRARY OF MACHINE DESIGN AND SHOP PRACTICE REVISED AND REPUBLISHED FROM MACHINERY

NUMBER 9

DESIGNING AND CUTTING CAMS

THIRD EDITION—REVISED AND ENLARGED

CONTENTS

The Drafting of Cams, by LOUIS ROUILLION - - 3

Cam Curves, by ARTHUR B. BABBITT and F. H. SIBLEY 18

Notes on Cam Design and Cam Cutting, by JAMES L. DINNANY - - - - - - - - - 30

Cutting Master Cams, by HERBERT C. BARNES - 37

Suggestions in Cam Making - - - - - 42

Copyright, 1911, The Industrial Press, Publishers of MACHINERY, 49-55 Lafayette Street, New York City

CHAPTER I

THE DRAFTING OF CAMS*

A cam is a device for converting circular into reciprocating motion. It generally consists of a disk having an irregular face that acts as driver of a follower in contact with it, or else of a groove cut in a flat or curved surface. Cams are very useful adjuncts to many forms of machines, as by their aid various complex and complicated movements may be obtained that were otherwise impossible. Their use is, however, attended with some objections of a character serious enough to warrant the substitution of some other method of arriving at a desired result when such other method is available. Among these objections may be mentioned the considerable amount of friction, producing wear, and the noisy action of cam movements. Despite these objections, cams have a wide use and are employed in many familiar machines.

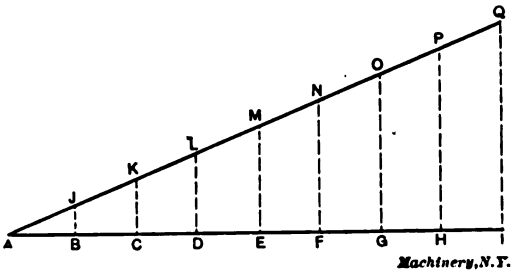

Fig. 1. Diagram graphically showing Motion Imparted to Follower by Cams in Figs. 2 and 3

Harvesters, printing presses, sewing machines, looms, and steam-valve mechanisms are a few of such machines to which cams contribute part of the action. The more complicated forms of automatic machinery, automatic screw machines, for instance, depend largely upon the aid of cams. The various machines used in the manufacture of shoes are also good examples of this class.

Laying Out a Cam for Uniform Reciprocating Motion

The knowledge of laying out cams is simply and easily acquired. The laying-out of a heart-shaped cam will serve as an illustration of the general method. This cam is used to convert circular motion into uniform reciprocating motion. Let it be required to lay out a cam that will move a follower with uniform velocity through a throw of 1½ inch. This action may be graphically shown by the aid of a diagram, Fig. 1. The action of but one-half the complete movement need be considered, as the return of the follower is along a curve similar to that occasioning the rise. Therefore, let *A I*, a line of indefinite length,

* MACHINERY, March, April and December 1897.

of the follower is to be uniform, this action may be shown by a straight line connecting *A* and *Q*. Divide the line *A I* into any number of equal parts, say eight, and erect perpendiculars at the points of division. The point *E* will then represent one-quarter revolution of the cam, and the distance *E M* will represent the throw at that point. In the same way the distance *C K* represents the amount of throw at one-eighth revolution, the distance *G O*, the throw at three-eighths revolution, and so on for the other perpendiculars.

To lay out the cam curve, describe about *X*, Fig. 2, as center any semi-circle, *a e i*. Divide this semi-circle into the same number of

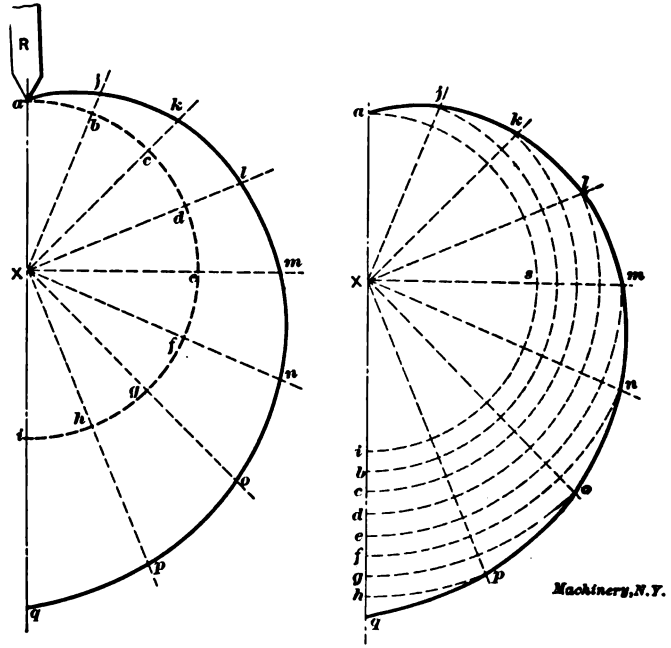

Figs. 2 and 3. Lay-out of Uniform Motion Cams

equal parts into which the line *A I* was divided. Connect these points of division with the center *X*, and extend the lines indefinitely beyond the semi-circle. On *X b*, make *b j* equal to *B J*, on *X c*, make *c k* equal to *C K*, and so on, extending each radius a distance equal to the corresponding perpendicular in Fig. 1. Then through the points *a*, *j*, *k*, *l*, etc., draw a smooth curve. This curve is one-half the required cam curve. By drawing a similar curve to the left of *a* the cam curve is completed. By rotating the cam about the center, *X*, the follower, *R*, would be forced to rise, with uniform velocity, through a distance of 1½ inch. During the second half of the revolution it would fall uniformly, by aid of gravity or a spring, to the initial point *a*.

Alternative Method of Laying Out Cam Curve

Another way of laying out the same cam curve is as follows: Draw any semi-circle, *a s i*, Fig. 3, and extend the diameter on one side a distance *i q* equal to the required throw. Divide *i q* into any number of equal parts, as at *b*, *c*, *d*, etc., and divide the semi-circle by the same number of radii equally distributed. With *X* as center and a radius

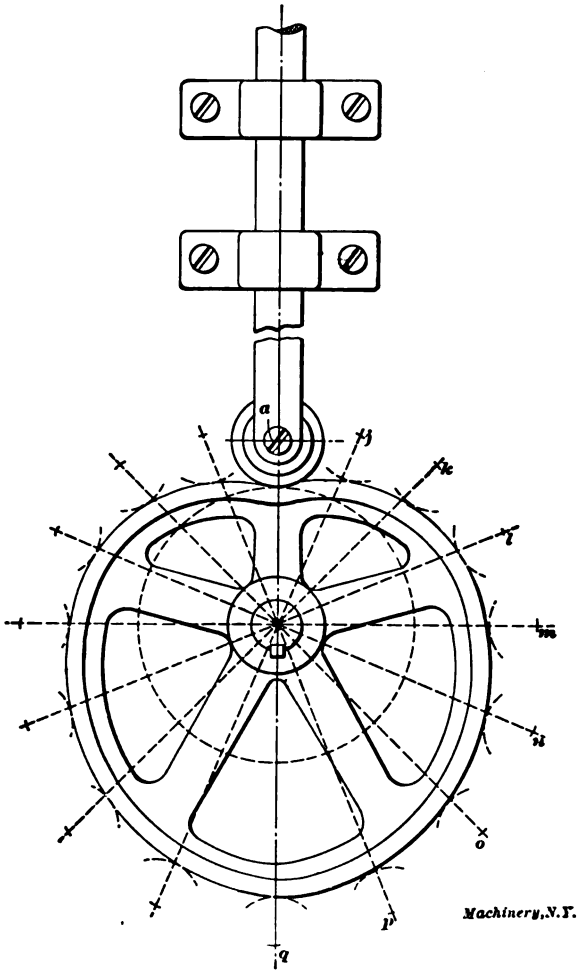

Fig. 4. Cam with Roller Follower

equal to *X b* describe an arc cutting *X j* at *j*. With the same center and radius equal to *X c* describe an arc cutting *X k* at *k*. Continue this process through the points *d*, *e*, *f*, etc., thus obtaining the points *l*, *m*, *n*, etc. The latter are points on the required curve.

The excessive friction of a pointed follower such as that shown at *R* necessitates the employment of a follower that will reduce the

ment. If a roller is employed as a follower the problem of laying out the cam curve becomes modified. A roller traveling along the curves shown in Figs. 2 and 3 would not impart to the follower-rod the desired uniform rise and fall. The variation would be but slight, yet sufficient to merit consideration where accuracy is desired.

Cams with Roller Followers

Fig. 4 represents a heart-shaped cam of the same dimensions as in Figs. 2 and 3, but with a roller follower. It is the path of the center

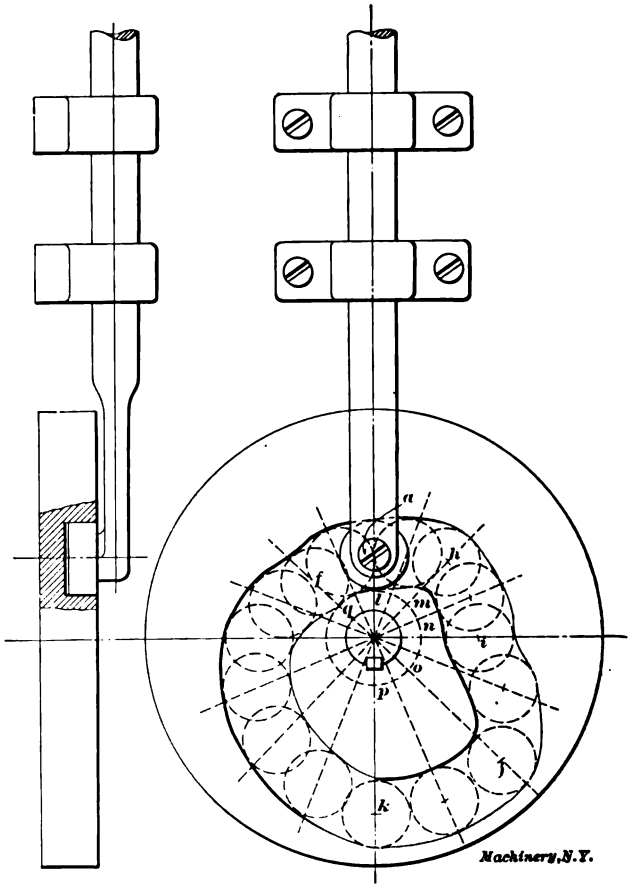

Fig. 5. Positive Action Cam for Variable Motion of Follower

of this roller that requires the first consideration, as the position of this center regulates the throw. Therefore, the position of the center of the roller at various intervals in the rotation of the cam must be determined. This may be done by adding to each of the distances *J B*, *K C*, *L D*, etc., in Fig. 1, the radius of the roller, and thus obtaining

the points *j*, *k*, *l*, etc. With these points as centers and with radii equal to that of the roller, describe arcs. A curve drawn tangent to these arcs is the required cam curve.

This cam depends upon the action of gravity, or a spring, to keep the follower in contact with the driver. It can be made positive in action by the use of two followers placed at the extremities of the diameter of the cam, or by drawing curves tangent to both the top and bottom of the follower roller in its various positions, and the two curves taken as the boundaries of a groove cut into the metal. A familiar application of the use of a heart-shaped cam may be found in the bobbin-winder of the domestic sewing machine. The thread is fed to and fro at a uniform rate, the follower of the cam acting as a guide for the thread. The action is made positive by the employment of two follower rollers.

Positive Action Cam for Variable Motion of Follower

The latter method of laying out a positive motion cam referred to above is more clearly shown in Fig. 5. A variable motion is here substituted for the regular motion of the heart-shaped cam. Let it be required to lay out a positive motion cam that shall impart to the

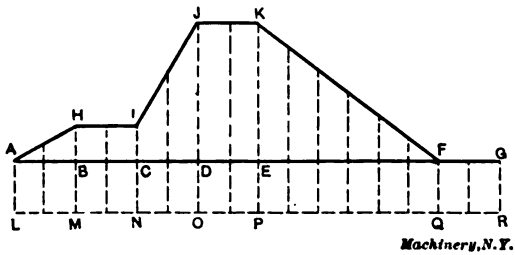

Fig. 6. Diagram of Motion Imparted to Follower by Cam in Fig. 5

follower the following action: A uniform rise of ¼ inch during the first eighth of a revolution; no action during the next eighth; a uniform rise of ¾ inch during the third eighth; no action during the fourth eighth; a uniform fall of 1 inch during the next three-eighths of the revolution; and no action during the last eighth. The action is graphically shown in Fig. 6. Let *A G* represent one complete revolution of the cam; *B*, the first eighth; *C*, the second; *D*, the third; *E*, the fourth; and *F*, the seventh. The problem calls for a uniform rise of ¼ inch during the first eighth. Therefore, from *B* draw the perpendicular *B H*, ¼ inch in length, and join *A* and *H*. As there is to be no action during the second eighth, draw *H I* parallel to *B C*; that is, the follower will be the same distance from *A G* at *I* that it was at *H*, and therefore the follower will not have been acted upon. During the next eighth revolution the follower is required to move ¾ inch. As it has already moved ¼ inch, the sum of these two distances is the length *D J*. As this rise is to be uniform, a straight line is drawn joining *I* and *J*. No action during the fourth eighth is shown by drawing *J K* parallel to *D E*. A uniform fall of 1 inch during the next

three-eighths of the revolution is shown by joining K and F, and the period of rest during the last eighth revolution is shown at $F G$. The line $A L$ is equal to the radius of the roller, and by drawing the line $L R$ parallel to $A G$, the distance of the center of the roller from the base circle may be taken directly for any radius of the cam.

To lay out the cam from the diagram, draw any base circle $l n p$, Fig. 5, and divide it into the same number of equal parts into which the line $A G$ is divided, *viz.*, sixteen. Through these points of division

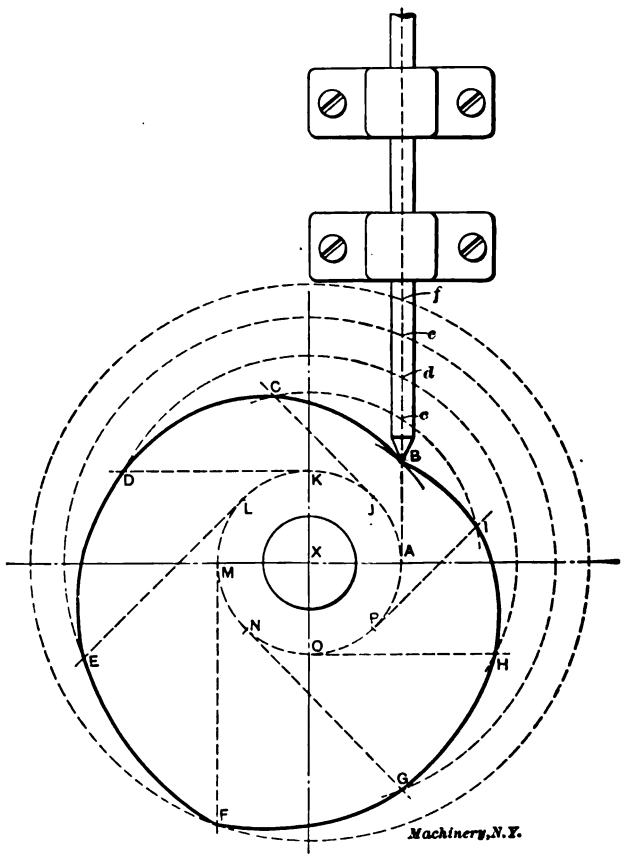

Fig. 7. Cam with Follower having Line of Action Eccentric with Cam Axis

draw radii and extend them indefinitely. Upon these radii take $l a = L A$, $m h = M H$, $n i = N I$, etc., thus determining the positions of the center of the roller at the various intervals. Sketch in the outline of the roller in its different positions, and draw curves tangent to these outlines.

Line of Action of Follower Eccentric with Cam Axis

In the cams previously considered, the line of action of the follower passes through the center of the cam-shaft. When the line of action

of the follower passes to either side of the center of the cam-shaft, as in Fig. 7, a different method of laying out the cam curve becomes necessary. Assume that the requirements and conditions are the same as in Fig. 2, excepting that the line of action of the follower shall be one inch to the right of the center of the cam-shaft. Draw the indefinite line *X A* passing through the center of the cam-shaft. One inch to the right of *X* draw the line of action *A f*, of the follower, perpendicular to *X A*. Let *B* be the lowest position that the follower is to assume, and let *f* be the highest. Divide the throw, *B f*, into any number of equal parts, as at *c*, *d* and *e*. Through *A* describe a circle with *X* as center. Divide this circle into twice the number of equal parts into which *B f* is divided. From each of these points *J*, *K*, *L*, etc., draw tangents to the circle. Then, with *X* as center, describe arcs through *c*, *d*, *e*, and *f*. Where the arc *c* cuts the tangents from points

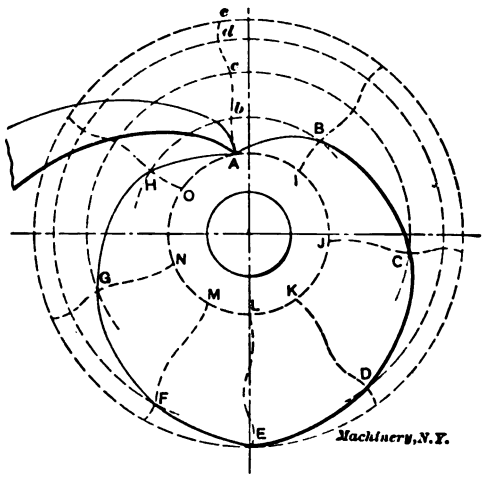

Fig. 8. Cam and Follower both having Variable Motion

J and *P*, as at *C* and *I*, are points on the desired curve. Where the arc through *d* cuts the tangents from *K* and *O*, as at *D* and *H*, are also points on the curve. The points *E*, *F*, and *G* are obtained in a like manner.

Cams with Pivoted Followers

The problem in Fig. 2 may be further modified by having the follower pivoted instead of acting in a straight line. In this case, the line of action becomes the arc of a circle. Problems of this nature may be solved by substituting for the straight line of action shown at *i q*, Fig. 3, an arc which shall represent the path of the follower. This arc of action takes the place of all the various radii in Fig. 3, and the points *b*, *c*, *d*, etc., serve as a series of initial points from which to swing concentric arcs to intersect the various positions of the arc of action of the follower. The method is analogous to that in Fig. 3. In Fig. 29 this method is applied to a cam of un-uniform motion.

Cams and Followers both having Variable Motion

The rotation of the driver has thus far been considered as uniform, and the action of the follower either uniform or irregular. A case will now be considered wherein both the action of the driver and that of the follower is irregular. In Fig. 8, let the unequal divisions into which the base circle *A J L* is divided by the points *A*, *I*, *J*, etc., represent spaces traversed by the driver in equal periods of time. That is, if it takes the driver one second to rotate through the arc *A I*, it will take the same time to rotate through the larger arc *I J* or the smaller arc *L M*. Again, let *A e* represent the irregular path of the follower and the points *b*, *c*, *d*, and *e* its position at certain equal intervals of time, say one second. The number of divisions made in the path

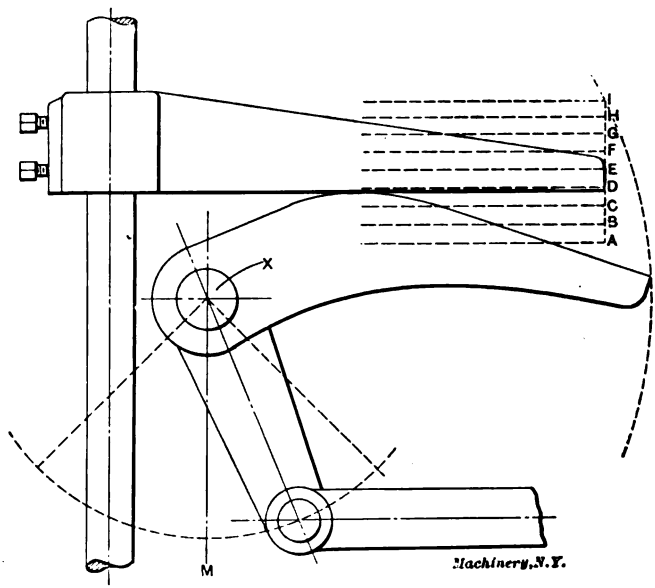

Fig. 9. Cam with "Flat-footed" Follower

of the follower should correspond with the number of divisions into which one revolution of the driver is divided. The points *B*, *C*, *D*, etc., of the cam curve may be found by the method of intersections explained in Fig. 3. This problem is of a general nature and is universally applicable to problems involving a disk driver and a follower other than a flat-footed one.

The "Flat-footed" Follower

A familiar example of a flat-footed follower is afforded by the toe-and-lift mechanism used to actuate the engine valves of side-wheel steamers. The "lift" or "wiper" is pivoted upon a rock-shaft which is caused to oscillate by an eccentric placed upon the paddle-wheel shaft. In Fig. 9, let the arc through which the rock-shaft swings equal 90 degrees—45 degrees on either side of the vertical—and let

the "toe" rise and fall with uniform motion through 1½ inch. It is required to design the upper face of the lift to give the desired throw.

Divide the throw, *A I*, into any number of equal parts, say eight, and locate the center of the rock-shaft, as *X*. Upon a piece of tracing paper draw a quadrant, *x h k*, Fig. 10, *x k* being equal to one-half the throw of the eccentric, say 3 inches. Draw *x l* at 45 degrees to *x h*, and *k l* at right angles to *x k*. Through the point of intersection, l, and with *x* as center, describe the arc *l m*. The arc *k h* then represents a quarter revolution of the eccentric, and the arc *l m* the corresponding angular movement of the rock-shaft crank. Divide the arc *k h* into the same number of equal parts into which the throw of the toe was divided, *viz.*, eight. Through these points of division draw lines parallel to *x m*, intersecting the arc *m l* in the points *n*, *o*, *p*, etc. From these points draw radial lines. Now, while the eccentric is moving through a quarter revolution with a uniform motion, as shown

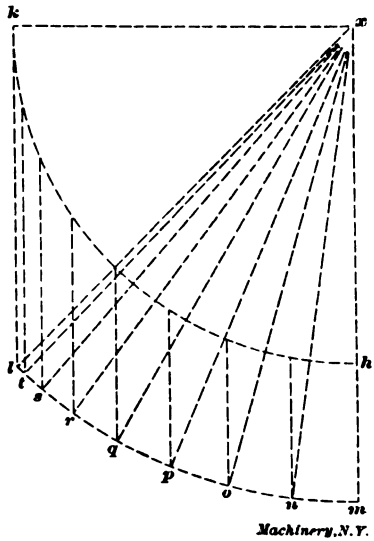

Fig. 10. Lay-out for Cam with "Flat-footed" Follower

by the equal division of the arc *h k*, the center line of the rock-shaft crank will assume the corresponding positions shown by the radial lines.

Place the tracing in Fig. 10 upon Fig. 9 so that *X* and *x* coincide, and the line *x m* falls upon the line *X M*. Then draw upon the tracing-paper the position of the line *A*. Rotate the tracing-paper about *X* until *x n* coincides with *X M* and draw the position of the line *B*. Again rotate about *X* until *x o* coincides with *X M* and draw the position of the line *C*. Continue this process until the positions of the lines *D*, *E*, *F*, etc., are located. A curve drawn tangent to the lines thus obtained is the required cam curve. This latter procedure is not shown in the cuts. The use of tracing-paper for laying out cam curves, as here

exemplified, is applicable to the laying-out of a variety of such curves. The tracing may be made to assume different positions of either the driver or follower, and their relation shown at any desired interval during their action.

In work dealing with cam curves there are some factors of a practical nature that must be considered, one of which may be here stated, as applying directly to the problem of the toe-and-lift. This factor is the easement of cam action to prevent jerking. The action as drawn in Fig. 9 has too abrupt a beginning and ending, and should be modified by an easement curve at both these points of action. In any action that tends to jerkiness, a smoother motion may be obtained by slightly modifying the curve at the offending point.

Cams with Double Contact

In the drawings of cams thus far shown, there has been but one point of contact between the driver and follower. Positive motion is often obtained by having two points of contact. Cams having two such

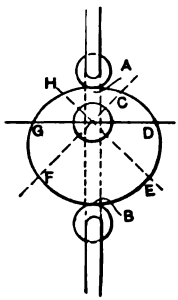

Fig. 11

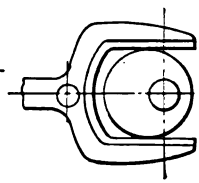
Fig. 12

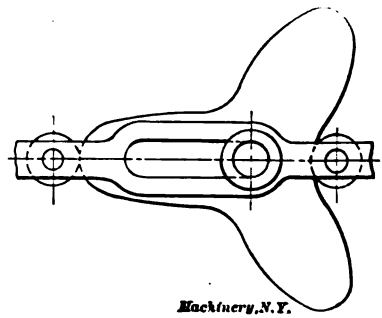

Fig. 13

points of contact are subject to certain limitations. For instance, in Fig. 11, if *A* and *B* are two points of contact of the follower, and are a constant distance apart, and the curve *A D B* be any assumed curve of one-half revolution of the cam, the curve of the remaining half revolution is limited to a curve complementary to *A D B*. That is, the distances *C F*, *D G*, and *E H* must equal the constant *A B*.

If it is desired to have an independent movement throughout the entire revolution of the cam it will be necessary to have two cams placed one upon the other, one point of contact of the follower bearing upon the second cam. In this case, having assumed any curve for one of the cams, the other cam must be made complementary to the first, the constant distance apart of the points of contact forming the basis for the calculation. Forms of double contact cams are shown in Figs. 12 and 13. Fig. 12 is a rocker cam, and Fig. 13 is a tri-lobe cam giving three reciprocating motions to the follower for each revolution of the driver.

Cylindrical Cams

Fig. 14 illustrates a method for laying out cylindrical cams. Let *g d a* be the plan, and *H a'* the development of the cylinder shown

in elevation at *K A*. Divide the plan into any number of equal parts as at *a*, *b*, *c*, etc., and project these points of division upon the front elevation of the cylinder as the elements *A*, *B*, *C*, etc. On the developed surface these elements appear as *a'*, *b'*, *c'*, etc. Upon the development, lay out the desired action, as in Figs. 1 and 6, avoiding or easing all sharp corners. Suppose *m l p* to be such an action. This curve will then represent the path of the center of the follower. Let *L* indicate the center of the follower. Then, as the cylinder is rotated about its axis, the point *L* moves to and fro a distance *L I*, and with an irregular motion dependent on the form of the curve *m l p*. The projection of this curve upon the elevation of the cylinder is shown at *L m*.

The form of the roller-follower may be either cylindrical or conical; the question of the shape of the follower has been treated more completely in Chapter V. In laying out the cam practically, the outline of the groove may be drawn by the method shown in Fig. 5, that is,

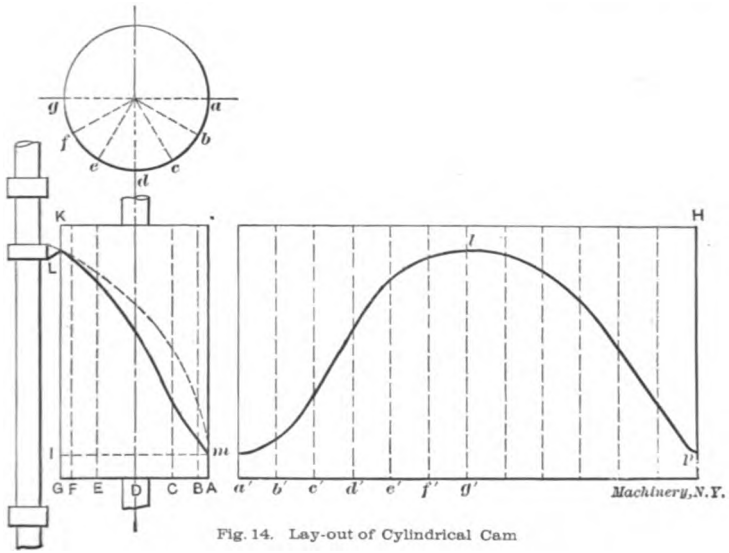

Fig. 14. Lay-out of Cylindrical Cam

by drawing curves tangent to the various positions of the roller, and then, by winding the drawing about the metal cylinder blank, any number of points of the groove may be located with a prick-punch; or, the drawing may be made directly upon the surface of the cylinder.

The method for laying out a conical cam is similar in principle to that for laying out a cylindrical cam, and is easily deduced from the latter.

Laying Out a Cam for Shifting Planer Belts

The following problem in machine design is one of a series given to the students in mechanical engineering at Cornell University. It furnishes a good example of the method of reasoning applied to practical problems in mechanics, and is also an interesting problem in quick-return motions. The problem calls for the designing of a device

for automatically shifting the belts of a planer. The driving shaft has a fixed pulley of wide face carrying two belts. The driven shaft has two sets of a loose and a fixed pulley. One set, smaller than the other, is driven by a crossed belt, and its shaft therefore rotates in a direction opposite to that of the driving shaft. The larger fixed pulley drives the planer while the tool is cutting, and the smaller fixed

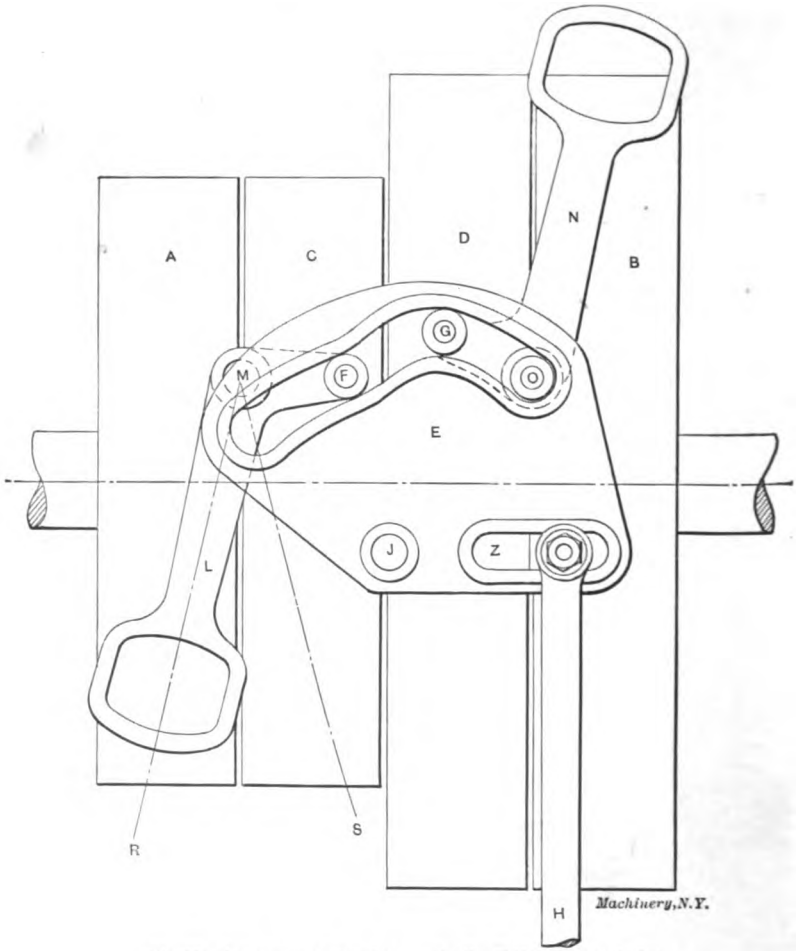

Fig. 15. Arrangement for Automatically Shifting Planer Belts

pulley causes a quick return of the tool while no work is being performed.

The shifter should be placed near the driven pulleys so as to operate each of the belts at its point of approach to its pulley, and to operate each belt separately. The shifter must also be operated automatically by the to-and-fro motion of the bed of the planer, and be capable of

adjustment to allow for the variation of the momentum of the machine under different loads.

In Fig. 15, *A* and *B* are the two loose pulleys of the driven shaft, and *C* and *D* the fixed pulleys. *E* is a grooved cam rotating about *J*, and having two roller followers *F* and *G*. *H* is a link driven to and fro by a tripping device attached to the planer bed. *L*, the shifter-arm for the smaller pulleys, is a crank rotated by the follower *F* about *M* as a center. In a similar way, the crank *N* rotates about *O*. The pivots *J*, *M* and *O* are carried on a plate made fast to the planer and not shown in the drawing. The portions of the cam to the left of *F* and to the right of *G* are arcs of circles with *J* as a center, and there-

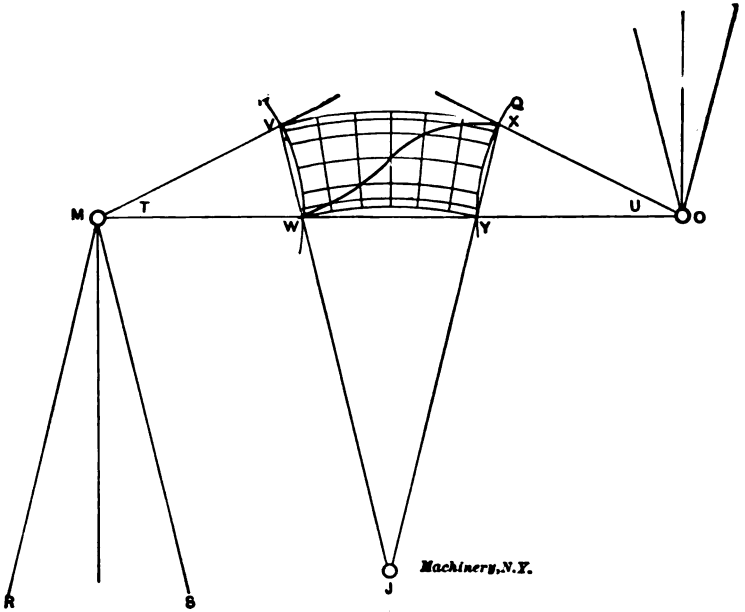

Fig. 16. Lay-out of Cam Curve for Cam in Fig. 15

fore, while either of the followers is traveling through these arcs there will be no movement of the shifter-arms. The throw of either of the arms is occasioned by its follower traversing the irregular path between *F* and *G*.

Imagine the link *H* drawn downwards. The cam then rotates towards the right about the center *J*. The follower *F* is held fixed in its position by the arc of the cam to its left, and therefore the shifter-arm *L* remains stationary. The path of the follower, *G*, however, is through the irregular part of the cam between *F* and *G*, which causes it to rotate about *O* as a center, thereby shifting the arm *N* from the loose pulley *B* to the fixed one *D*. If the link *H* is operated in the reverse direction to that imagined above, the shifter-arm *L* will then become the active member, and the shifter-arm *N* will remain inoperative.

A method for determining the irregular path of the centers of the followers *F* and *G* is shown in Fig. 16. First locate the points *M* and *O* from Fig. 15, and draw the circular arcs *P* and *Q*, the paths of the centers of the followers *F* and *G*. Then draw *R* and *S*, the extreme positions of the center line of the shifter-arm *L*. Make angles *T* and *U* equal to the angle formed by the lines *R* and *S*. Divide the line through *V W* into six parts proportional to 1, 3, 5, 5, 3, 1, and through the points of division draw arcs with *J* as a center. Divide *V X* into six equal parts, through which draw radial lines. The successive intersections of the circular arcs and the radial lines determine the paths of the followers *F* and *G*, as *W X*. Lines drawn tangent to successive positions of a follower along the line *W X* will be the outline of the cam-slot at its irregular part.

The slot *Z*, Fig. 15, permits adjustment of the link as called for in the conditions of the problem. The center of the opening for the belt in the shifter-arm *L* is placed nearer to the center line of the shaft to allow for the angularity of the cross belt.

Laying Out an Intermittent Motion Cam with Pivoted Follower*

The cam to be laid out is shown in Fig. 17. It turns toward the left and moves a 1-inch roller *A* which controls the lever *B* swinging on the stud *C*. The cam is to be keyed to a shaft, together with several other cams, in all of which the keyway is at the beginning of the cycle. The requirements which follow are selected to illustrate as simply as may be the method employed. The head of the lever *B*, which is 12⅜ inches long, is to remain at rest until the cam has turned 150 degrees from the zero point or beginning of the cycle; it is then to advance 1½ inch in 43 degrees; then it will dwell for 35 degrees more, and, finally, retreat 1½ inch in 92 degrees, after which it will dwell for the remainder of the cycle. In Fig. 17 it is seen that the roller *A* is located at one-third of the distance from the pivot of the lever to its head. Hence a movement of one-half inch is required of the roller in the cam to move the lever head 1½ inch.

We will now begin the lay-out. Draw first the circumference of the cam; its diameter we will make 10 inches. With the keyway on the vertical diameter, draw a line through its center. With this line as zero, divide the circumference into 30-degree sections, as shown, and number them. Now draw the circle *D* with a radius of 4 3/16 inches, to show the extreme outer position of the center of the roller, and the circle *E* with a radius of 3 11/16 inches, to show the extreme inner position of the center of the roller. Next, with the center of the cam as its center, draw the circle *F*, so that it will pass through the center of the stud *C*. Beginning with the center of the stud *C* as zero, divide this circle into sections and number them, as shown, for each 60 degrees. Such further sub-divisions as may be needed later may be made when required.

Proceed now with care to place the needle of a pair of good compasses in the center of the roller *A*, and adjust them so that the pencil

* Herbert C. Barnes, MACHINERY, October, 1908.

point will pass through the center of the stud *C*. We will call this radius *R*. Now having in mind the requirements stated above, one being that the cam should turn 150 degrees from its zero before the roller moves, place the end of the compasses at 150 degrees on the circle *D*. Holding the needle here, with the radius *R* draw an arc intersecting the stud circle *F* at the point *G*. It is seen that the point of intersection is at 60 degrees on the circle *F*. Now place the needle point 43 degrees further along on the stud circle, or at 103 degrees, and with the radius *R* draw an arc intersecting the circle *E* at the point *H*. The point *H* marks the halt of the advance of the roller,

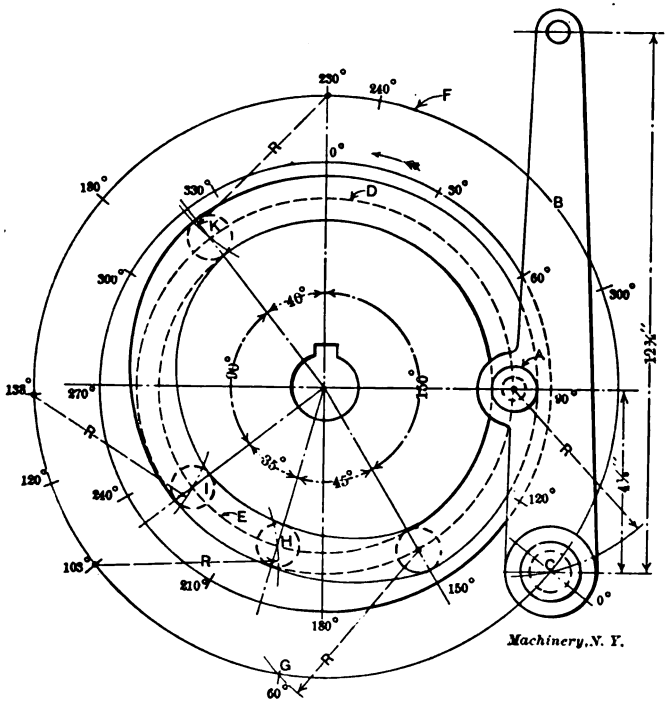

Fig. 17. Lay-out of Intermittent Motion Cam with Pivoted Follower

and the beginning of its dwell. Now move the needle 35 degrees further along the stud circle to 138 degrees, and with the radius *R* draw another arc intersecting the circle *E* at the point *I*. This point marks the end of the dwell and the beginning of the retreat. Now move the needle 92 degrees further along the stud circle to 230 degrees and with the radius *R* draw an arc intersecting the circle *D* at the point *K*. This point marks the end of the retreat and the beginning of the dwell for the remainder of the cycle.

The points *H*, *I* and *K* being marked, draw radii through them extending to the circumference of the cam circle. Knowing that the roller begins to advance at 150 degrees on the cam, the advance is seen to

continue for 45 degrees. The roller then dwells for 35 degrees and retreats in 90 degrees, after which it dwells until the next advance begins. It is proper that these figures do not agree with the figures for the lever movement stated above. Barring possible slight errors in the lay-out, they are correct for the cam.

The radius of the inner wall of the raceway or groove is, of course, ½ inch less than that of the path of the cam center. Hence the radius of the inner wall of the outer dwell is 3 11/16 inches, and that of the inner dwell is 3 3/16 inches. This inner wall is the counterpart of the master cam which will be used for cutting the cam groove.

CHAPTER II

CAM CURVES*

When the curve of a cam is not determined by a given definite motion of the follower, and the condition presented to the designer is simply to make the follower move through a given distance during a given angle of motion of the cam-shaft, the ease and silence with which the cam works depends upon the character of curve used in laying out the advance and return. The uniform motion curve, the simplest of all curves to lay out, is a hard-working curve, and one that cannot be run at any great speed without a perceptible shock at the beginning and end of the stroke.

Uniform Motion Curve

The uniform motion curve would be represented in a diagram by the diagonal of the rectangle of which the base represents the angle of motion, and the altitude, the stroke of the cam, as shown by the full lines in Fig. 18. However, should the nature of the design demand a uniform motion for a given part of the revolution of the cam-shaft, the shock at beginning and end of stroke may be modified by increasing both the angle of motion and the stroke, and, in the diagram, filling in arcs of circles as shown by the dotted lines in Fig. 18. The amount of curvature at the ends of the stroke is dependent upon the amount it is possible to increase the angle of motion, and the centers of the arcs are determined by drawing perpendiculars to *X Y* as shown in Fig. 18. It will be noticed that the uniform motion has been maintained for the original angle, the modifications at the ends causing the increase of angle of motion and of stroke, the rectangle formed by these two being shown by dotted lines. Even with these modifications the cam is still apt to work hard, especially if the angle of motion is small.

* MACHINERY, April, 1907; July, 1907, and February, 1908.

Harmonic Motion Curve

The crank or harmonic motion curve works much more easily than the uniform curve, and a cam laid out with this motion may be run at a high speed without much shock or noise. To draw a diagram of this curve, draw a semi-circle having a diameter equal to the stroke of the cam, and divide this semi-circle and the line representing the angle of motion into the same number of equal parts. The intersec-

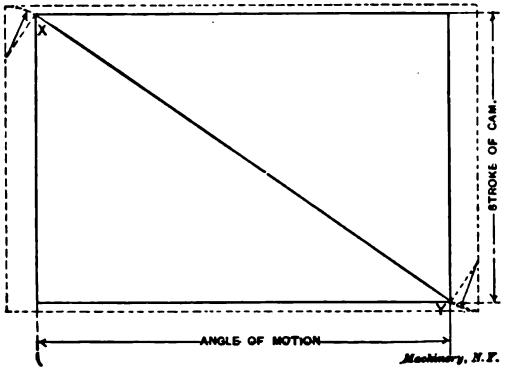

Fig. 18. Uniform Motion Curve

tion of lines drawn from these divisions will give points on the curve. Fig. 19 shows the harmonic curve and the manner in which it is obtained.

Gravity Curve

Probably the easiest working cam curve is the one known as the gravity curve. This curve has a constant acceleration or retardation

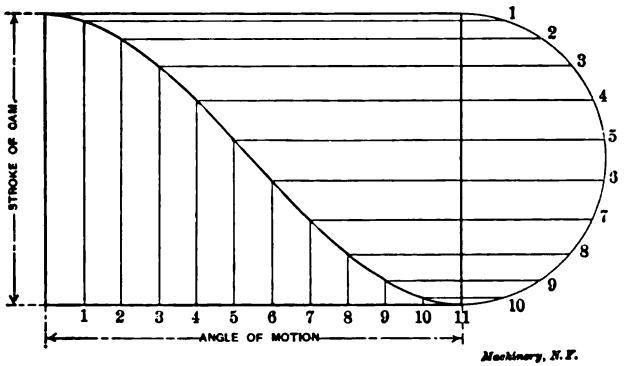

Fig. 19. Crank or Harmonic Motion Curve

bearing the same ratio to the speed as the acceleration or retardation produced by gravity; hence its name. A body falling from rest will pass through about sixteen feet in one second (more accurately 16.08 feet). During the next second the body will increase its velocity by about thirty-two feet making the distance covered during the second

second forty-eight feet; during each succeeding second the body will gain in velocity thirty-two feet. Using sixteen feet as a unit of measurement, it will be seen that a body would travel through units 1, 3, 5, 7, 9, etc., during successive seconds or units of time. To apply this motion to the cam curve, we might divide the angle of motion into a given number of equal parts and, using the units given above, we may increase the velocity to a given maximum and then, retarding with the same ratio, bring the follower again to rest at the other end of the stroke. In the diagram, Fig. 20, the line representing the angle of motion is divided into eleven equal parts which necessitates

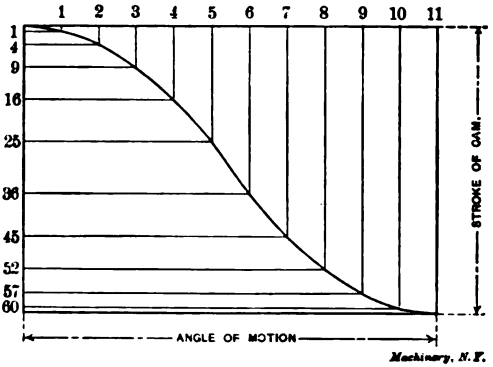

Fig. 20. Gravity Motion Curve

eleven divisions on the line representing the stroke of the cam. If the motion for the first part of the stroke is to have a constant acceleration, as referred to above, the distance traversed by the follower during the first part of the angle of motion would be one unit; in the second part, three units; in the third part, five units, and so on until the maximum velocity had been reached which would be during the

Number of period.	Distance traversed by follower during one period.	Total distance traversed since beginning of motion.
1	1	1
2	3	4
3	5	9
4	7	16
5	9	25
6	11	36
7	9	45
8	7	52
9	5	57
10	3	60
11	1	61

sixth part of the angle of motion when the follower would travel through eleven units of motion. At this point the motion would begin to be retarded by a constant deduction which would cause the follower to move through nine units during the seventh interval of time, seven units during the eighth, five units during the ninth, three units during

the tenth, and one unit during the eleventh and last interval. The sum of these units is sixty-one, which will necessitate dividing the line representing the stroke of the cam into sixty-one equal parts of which the first, fourth, ninth, sixteenth, twenty-fifth, thirty-sixth, forty-fifth, fifty-second, fifty-seventh, sixtieth, and sixty-first will be used for determining points on the curve. The combination of the table given and the diagram shown in Fig. 20 will show how the gravity curve may be drawn.

Approximation of Gravity Curve

A very close and satisfactory approximation for the gravity curve, and one that entails less work than the theoretical, is shown in Fig. 21. The method of drawing is similar to the one used for the harmonic motion, excepting that an ellipse takes the place of the semi-circle. It can be seen very readily that the ratio of the major and minor axes will determine the character of the cam curve. To obtain a curve that

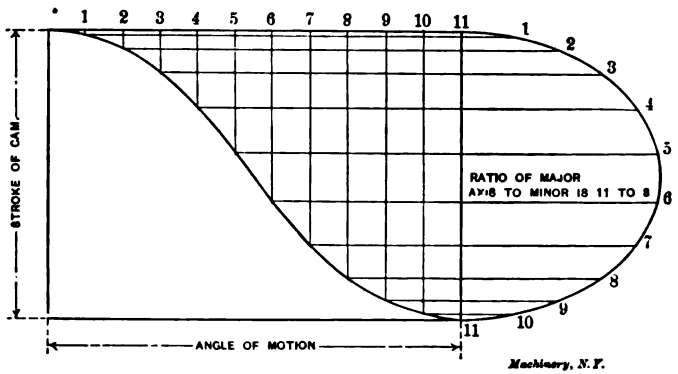

Fig. 21. Approximate Gravity Curve

will approximate the gravity curve, the line representing the stroke of the cam should be used as the minor axis and the ratio of major axis to minor axis should be 1⅜ to 1 or 11 to 8. Dividing the semi-ellipse and line of angle of motion into the same number of equal parts, and projecting, we obtain points on the curve. Fig. 22 is given so that a comparison may be made of the three motions given above when applied to the same cam.

Laying Out Cams for Rapid Motions

As already mentioned in Chapter I, we may consider a cam mechanism as being made up of two elements. As generally constructed, one element is a revolving plate cylinder, cone or sphere, and the other element is a bar or a roller which has some form of reciprocating motion. The revolving piece is usually made the driver, although the mechanism may be made to work in the reverse order. The shape of a cam will depend upon the kind of motion that the follower is required to have. The motion of cams that are used for driving parts

of machinery, may be, as we have already seen, one of three kinds, *viz.*:

1. *Uniform motion*, in which the follower is made to pass over equal spaces in equal intervals of time.

2. *Simple harmonic motion*, in which the follower is accelerated from rest to a maximum velocity and then retarded again to a state of rest, following the harmonic cycle.

3. *Uniformly accelerated motion*, in which the follower is accelerated from rest to a maximum velocity and then retarded again to a state of rest, the acceleration being uniform, as, 1 inch per second, 2 inches per second, etc.

To this we may add a fourth kind frequently met with:

4. *Intermittent motion*, periods of motion being interrupted by periods of rest.

In slow-moving machinery it may not be important whether the follower moves with uniform, simple harmonic, or uniformly accelerated motion, but in machines where the cams have a high rotative speed, and the follower a reciprocating motion, as in the case of sewing machines and in some textile machinery, a uniform rate of motion will

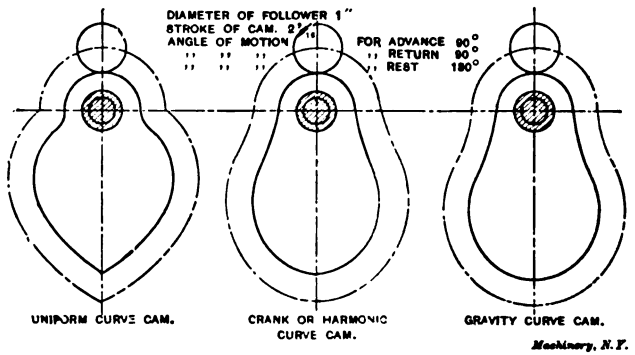

Fig. 22. Comparison between the Different Cam Constructions

be unsatisfactory or impossible. The reason for this is that the follower is impelled from rest to its maximum velocity instantly, and also brought to rest from a maximum velocity instantly. This gives it a sudden jerk at each end of the motion, which is very trying to a machine when the reversals take place rapidly. Cams for high rotative speeds, where the follower has a reciprocating motion, should, therefore, be so designed that the follower will start gradually, attain its maximum speed near the middle of its path, and then gradually come to rest. In other words, the follower should have a uniformly accelerated motion during the first half of its movement, and a uniformly retarded motion during the last half.

In uniformly accelerated motion $S = \frac{1}{2}Pt^2$, where S = the distance passed over, P = the acceleration, and t = the time. This is the same as saying that the distance which the body has passed over at the end of any number of units of time varies as the square of the number of such units. For example, if a body has a uniform acceleration of 2

inches per second, $S = \frac{1}{2} \times (2) \times (1)^2 = 1$ for the first second; $S = \frac{1}{2} \times (2) \times (2)^2 = 4$ for the next second; and so on. This is, as said before, also the law of falling bodies whose motion is not resisted by the air or other medium. Uniformly retarded motion obeys the same law. If time intervals of such a motion be plotted as abscissas and the corresponding space intervals as ordinates, with reference to coordinate axes, the resulting curve will be a parabola, and this is the curve that should be used for the outline of cams that are designed for high rotative speeds.

Uniform Motion Cylinder Cam

The cams shown in the following cuts do not necessarily represent any existing forms; they simply illustrate how the principle may be applied to certain shapes of cams and paths of followers. In Fig. 23, lay out on a sheet of paper *A B D C* a line constructed as follows: Bisect *C D* at *M* and divide *C M* into any convenient number of parts, say

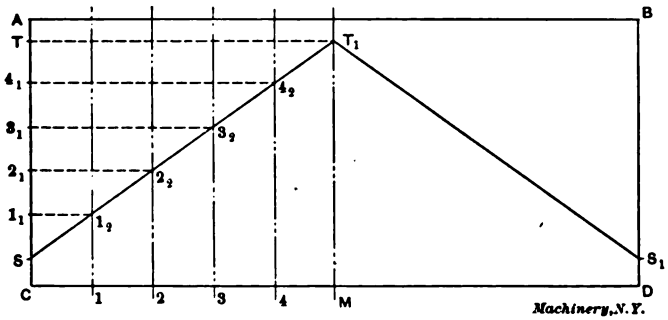

Fig. 23. Development of Uniform Motion Curve

five. Lay off on *C A* any distance *S T*, and divide *S T* into the same number of parts as there are in *C M*. Through the points 1, 2, 3, etc., on *C M*, erect perpendiculars to *C M*, and through the points 1_1, 2_1, 3_1, etc., on *C A*, draw parallels to *C M* intersecting the perpendiculars at points 1_2, 2_2, 3_2, etc. A line *S* T_1 drawn through these intersections will be straight. The line $T_1 S_1$ can be found in the same way. Now if the sheet of paper *A B D C* be wrapped around the outside of a cylinder whose circumference is equal to the distance *C D*, the line *S* T_1 will take the position *S T*, Fig. 24, and the line $T_1 S_1$ will form a similar curve on the reverse side of the cylinder. If this curve be made the center line of a groove, as the cylinder revolves on its axis, the groove will drive a follower up and down, parallel to the elements of the cylinder, with a uniform speed. The follower will start and stop at either end of its motion with a sudden jerk.

Uniformly Accelerated Motion Cylinder Cam

In Fig. 26 let *A B D C* represent the paper as before. Bisect *C M* at 3, and *S T* at 9. Divide *C*3 and 3*M* into any convenient number of parts, say three; then divide *S*9 and 9*T* into the square of three parts, or 9, as shown. Erect perpendiculars to *C M* at the points 1, 2, 3, etc., and draw parallels to *C M* through the points 1, 4, 9, 4_1, and 1_1. Through

The curve $T_1 S_1$ is constructed in the same way. Now wrap the sheet of paper $A B D C$ around a cylinder whose circumference is equal to $C D$. The curve will take the position $S T_1$, Fig. 27, and the curve $T_1 S_1$ will take a similar position on the reverse side of the cylinder. A groove made with these curves as center lines will drive a follower P up and down through the distance K, as the cylinder is rotated on its axis. The follower will start gradually at S, attain its maximum velocity, and then come gradually to rest again at T_1, the motion being

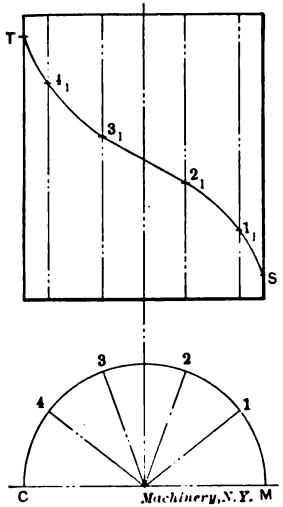

Fig. 24. Uniform Motion Curve scribed on Cylindrical Surface

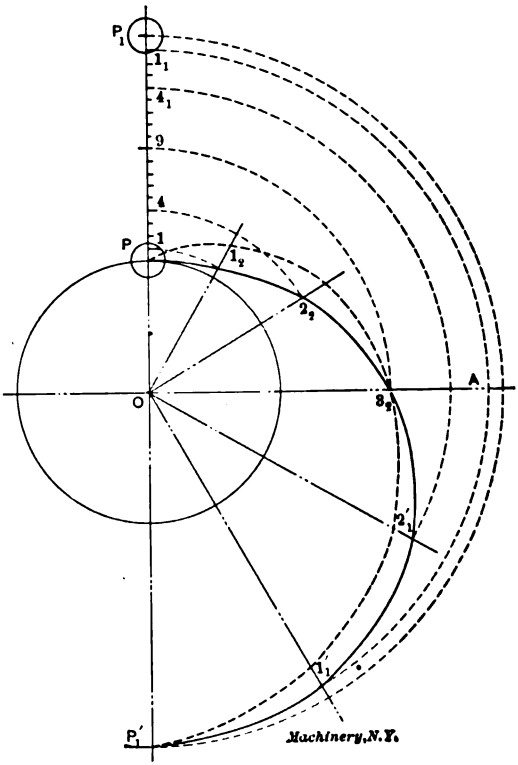

Fig. 25. Accelerated Motion or Gravity Curve applied to Plate Cam

uniformly accelerated and retarded. The sides of the groove are made parallel to $S T_1$, and drawn to suit the diameter of follower P.

Fig. 28 shows the distortion of the curve $S T$ when the follower moves in the arc of a circle, with center at some point Q, instead of in a straight line. Points on the new curve are found by setting off from the intersections b_1, d_1, etc., the ordinates $a b$ and $c d$. The curve $S a_1 c_1 T$ is then made the center line of a groove which will drive the hinged follower with the same variation in speed attained by the follower in Fig. 27.

Accelerated Motion Plate Cam

Fig. 25 shows how the parabolic curve is applied to a plate cam. The roller follower is supposed to oscillate between P and P_1 as the cam rotates about O. The curve $P3_2P_1'$ corresponds to $S\,T_1$ in Fig. 27, being the center line of the parabolic groove in the face of the plate.

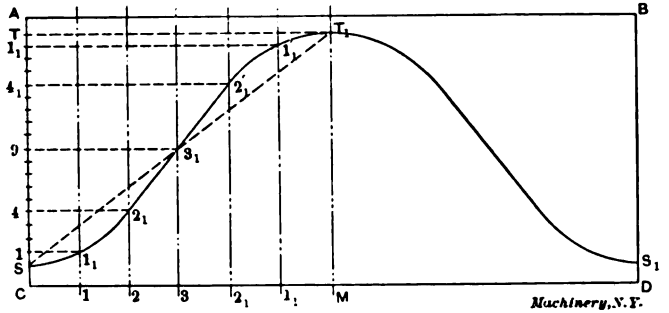

Fig. 26. Development of Uniformly Accelerated Motion Curve

Only one-half of the cam is shown in the figure. Suppose this cam is to rotate 180 degrees, while the follower moves from P to P_1. Draw the base circle with radius $O\,P$, the length of which will depend upon the size of the cam. Draw $O\,A$ perpendicular to $O\,P$, and divide the arc subtended by $P\,O\,A$ into any convenient number of parts, say three. Draw radii $O1_2$, $O2_2$, etc. Divide $P\,P_1$ into two equal parts at 9, and divide $P9$ into the square of three parts, or 9, as shown. With O as a

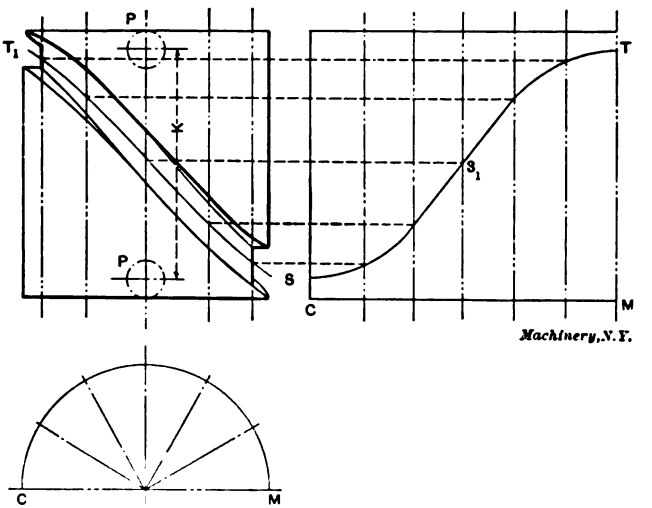

Fig. 27. Transferring Uniformly Accelerated Motion Curve to Cylinder

center, and radius $O1$, find the intersection 1_2. In the same way find the other intersections 2_2, 3_2, etc., and draw a smooth curve through these points. This curve has the same relation to the curve of uniform

motion shown dotted, that the parabolic curve has to the straight line in Fig. 26. If a similar curve be laid out on the other side of $P P_1'$, and made the center line of a groove, then the follower P will be pushed up and down mechanically by direct contact. If a curve parallel to $P3, P_1'$, and drawn at a distance equal to the radius of the follower away from

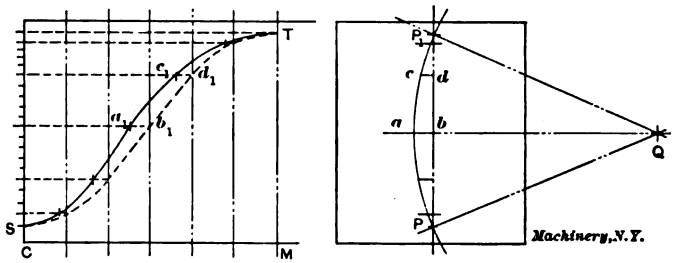

Fig. 28. Accelerated Motion Curve, when Follower moves in the Arc of a Circle

it, on the inside, be made the outline of the cam, then the follower will be pushed up mechanically to P_1, and allowed to fall by its own weight. It will remain in contact with the cam theoretically, because the principle of uniformly accelerated motion is the same as that of a falling body. In practice, however, the friction and the inertia of the connected

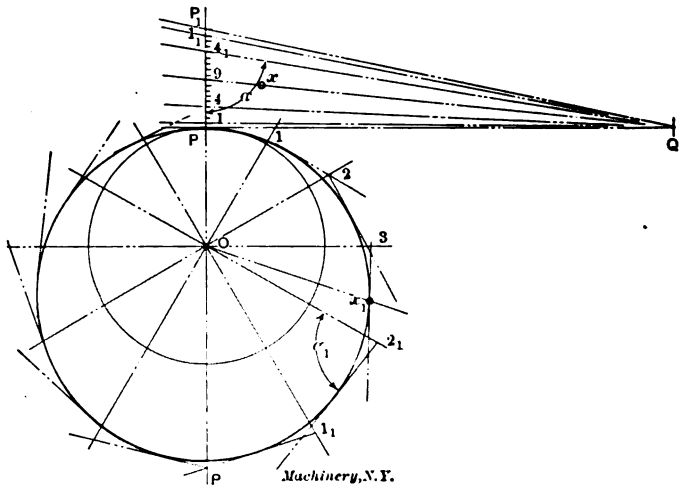

Fig. 29. Plate Cam for Bar Follower

parts would probably prevent the follower from remaining in contact with the cam on its return motion if the oscillations were rapid.

Fig. 30 shows the parabolic cam constructed for a follower which moves in any curved path. The construction is the same as in Fig. 25 except that points on the curve are located on radial lines Oa_1, Ob_1, etc., offset from the first radii by the distances $2a_1 = 4a$, $3b_1 = 9b$, and so on.

Plate Cam with Bar Follower

When a plate cam is to be laid out to drive a bar follower through a certain cycle of operations, the construction is more complicated. The base circle is divided as in the previous case into any convenient number of parts, and the square of the number of such parts laid out from *P* to 9 and from 9 to P_1, Fig. 29. If the bar is to oscillate about *Q* as a center, it will take the positions *Q*1, *Q*4, *Q*9, etc., as the radii *O*1, *O*2, *O*3, etc., come to the position *OP*. The intersections 1, 2, 3, and so on, are found just the same as in the previous cases. Now instead of drawing the curve for the cam outline through these points, straight lines which represent the edge of the follower must be drawn

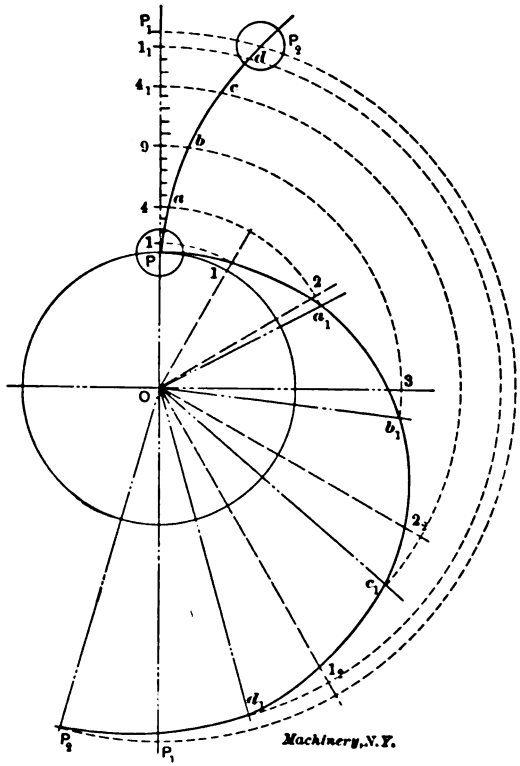

Fig. 30. Accelerated Motion Curve applied to Plate Cam, with Follower moving along a Curve

through the points making the same angle with a given radius as the follower makes with *OP* when the radius in question is in the position *OP*. For example, angle a equals angle a_1. Now the cam outline is a smooth curve drawn tangent to these straight lines. If the bar follower, instead of being centered at *Q*, moves up and down parallel to its first position, then all these angles are right angles. If the face of the bar is curved, then the cam outline must be drawn tangent to the

curves after they have been properly located with respect to their several radii.

In drawing cams like Fig. 29, the proper relation between the diameter of the base circle and the distance PP_1 must be assumed. If the base circle is too small, the cam outline will not be tangent to the edge of the follower in all positions, and the latter will not have uniformly accelerated and retarded motion. There is a rolling and sliding contact between the cam and its follower in the case of Fig. 29. The rolling action tends to carry the point of contact outward to the right of *OP*, during the upward motion, and to bring it back towards *OP* during the downward motion. The point of contact x does not necessarily occur when Ox_1, is perpendicular to Qx.

Effect of Changing Location of Cam Roller

When the line of motion of a follower passes through the center of rotation of the cam and the angle of the curve causes it to work hard,

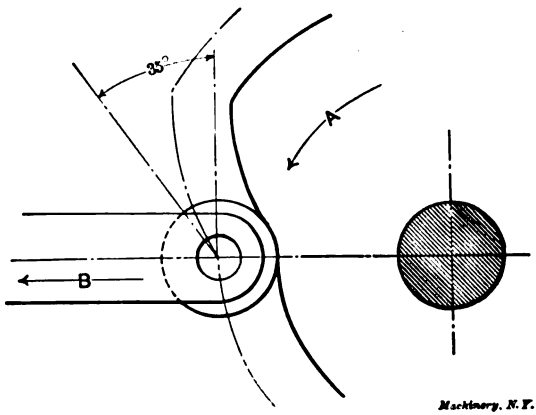

Fig. 31. Cam Roller on Center Line of Cam

the curve may be modified, and the same motion of follower obtained by placing the follower with its line of action parallel to its original position and not passing through the center of the cam. A condition may be assumed, as shown in Fig. 31.

Here we have a cam, rotating in the direction indicated by the arrow *A*, whose duty it is to move the follower ¾ inch in the direction indicated by the arrow *B* during a 30-degree angle of motion of the camshaft. The angle of the cam as presented to the follower at the beginning of the stroke would be 35 degrees, as determined by the tangent to the curve of the centers, as indicated on the drawing. After the follower had moved one-third of its distance, the angle presented would be 32 degrees, and when two-thirds of the travel had been made, the angle of the curve would be about 30 degrees. The angles given are for a curve which would give a uniform motion to the follower. Should the cam curve work hard at the required speed we would naturally make the cam of greater diameter, if possible, which would reduce the

angle of the cam, as shown by the difference in the angles presented in Fig. 31, as we go out from the center of rotation. The design of the machine, however, might make this change impossible. If it was simply necessary to get the follower from the position shown to a point ¾ inch distant in a 30-degree movement of the cam-shaft, without regard to its motion, a harmonic or gravity curve might be used which would cause the cam to work easier. However, this would be impossible should our design require a uniform, or some other equally hard motion. A third way in which the angle of the curve might be decreased would be to make the angle of motion of the cam-shaft greater. This, too, might be made impossible by the limitations of our design.

Another way, and one not commonly used, consists in changing the location of the cam roller. In Fig. 32 all conditions are the same as

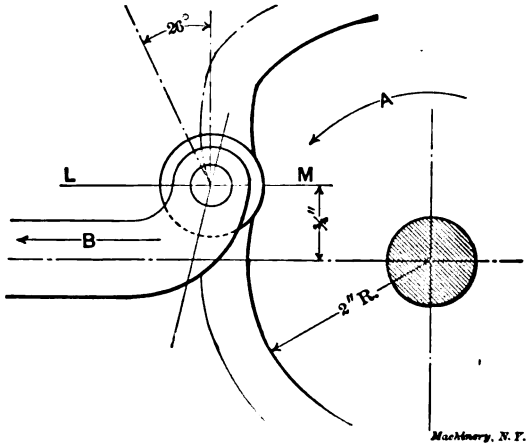

Fig. 32. Cam Roller placed above Center Line of Cam

in Fig. 31, except the roller has been placed ¾ inch above the line passing through the center of the cam. The center of the roller will now pass along the line *L M*, or parallel to the line of motion in Fig. 31. The angle of the curve presented to the roller in this case is 26 degrees, much less than the angle presented in Fig. 31, and the angle decreases as the roller moves away from the center of rotation. The advantage that may be gained by moving the cam roller may be readily seen by comparing the results given above. There is, of course, a limit to the distance the roller may be changed, for if placed too far away from the center line, the thrust in the direction at right angles to the direction of motion of the follower would be so great as to offset the advantage gained.

Even without the aid of an illustration it may be seen that to place the cam roller on the other side of the center would cause the angle of the cam curve to increase, thus making conditions worse. The offset of the roller should be in the direction opposed to the direction of motion of the cam.

CHAPTER III

NOTES ON CAM DESIGN AND CAM CUTTING*

It is strange that the processes and methods of cam cutting have not been improved more rapidly than they have. Twenty-five years ago, cams and gears were on about an equal footing; that is to say, most of both were cast to as nearly the proper shape as possible, after which the working surfaces or teeth were smoothed up with a file, and then the holes and hubs were finished in the usual manner. Some cams of both plate and barrel forms were cut, with suitable attachments, in the same machine the gears were cut in. This was an old hand indexing machine, with an automatic feed composed of a weight hung on the pilot wheel. Since that time gear cutting machinery has been wonderfully developed. All sorts of styles and arrangements are on the market, meeting every demand, from that for a general purpose machine to highly specialized forms. When it comes to cam cutting machinery, however, while machinery builders have special tools for their own work, so far as the writer is aware, there is no tool regularly on the market for cutting cams. The cam has thus fallen behind the gear in the process of development. Machine designers and machine users are liable to be a little suspicious of cams, anyway. Considerable trouble is often taken to avoid the necessity for using them. This is due, however, as much to faulty design and faulty construction as to any inherent objections to this form of mechanical movement. It is here proposed to call attention to some of the points to be considered in designing and producing satisfactory cams, with the thought of thereby doing something to justify a more extensive use of them.

Faults in the Design of Cams

We have all seen cams that were the cause of a good deal of profanity, in which the trouble could be traced to the designer or machinist, who laid out the curves on what might be termed "schedule time"; that is to say, he simply made sure of his starting and stopping points, neglecting all intermediate points so long as the movement got there and got back on time. This, he thought, would be all that was necessary, not taking into account the shock and jar caused by the sudden starting and stopping of heavy slides, levers, etc., at even moderate speeds. The temptation to do this is always strong, especially in the case of barrel cams, where it is so much easier to use the milling machine (gearing it up for a spiral to meet the schedule requirements), than it would be to lay out and form a curve with a gradual starting of the motion and a gradual stopping. There is nothing worse for the life of a machine than to have it operated by cams cut by this "sched-

* MACHINERY, August, 1907.

ule" method. Another point to consider is that of taking advantage of all the time there is for any given movement. The period or periods of rest should be cut down to the last degree, so as to have the angularity of the rise as small as possible. Careful work at the drawing-board will make a big difference with the satisfactory action of cams in these two respects. Still another bad practice, which has perhaps tended to throw the use of cams into disfavor, is that of making them in two or more parts, with the idea of having the working surfaces adjustable. After they have been wedged out, or shimmed up, or ground off a few times, a more proper name for them would be "bumpers" rather than "cams." Except in rare cases, there is no more use or excuse for adjustable cams than for adjustable gears, as there are other and better means of making adjustments when these are necessary. Cams are not very expensive as compared with gears, and they can be duplicated with greater accuracy than most machine parts. Especially is this the case if roughing and finishing mills are used in forming them, as the finishing mill will retain its cutting edge and size for a great number of cams, if it runs true with the spindle in the first place.

Cam Rolls and Roll Studs

A few words might be said with relation to the design and construction of cam rolls and the studs for them, since the successful working of a cam depends to a considerable degree on this matter. The design of the roll and its stud should be such that the work it has to do, the speed at which it runs, and the bearing area on the stud, should be the factors determining its size, rather than the simple fact that there is a milling cutter in the tool-room of a certain diameter. It is equally important that the roll and stud should be ground all over after hardening. The end of the roll should also be cut back for 1/64th of an inch or so on the sides for some distance from the outside diameter, so as to avoid undue friction against the collar of the stud, or the part it is mounted in. On account of the warping that takes place in hardening, rolls that are not ground inside and out have a habit of stopping frequently under load, until in time flat spots are worn on the face; then the working surface of the cam will begin to wear or rough up. Roll studs that are the slightest degree out of parallel to the working surface of the cam will also cause some trouble, but no amount of grinding will help this case. The same trouble occurs on barrel cams if the milling cutter is set above or below the center of the cam when cutting it. The roll will then bear at one end only at the most important time, when the throw takes place. A conical roll is the proper thing for this style of cam. There is a lot of end pressure to a roll of this type, however, which must be taken care of by thrust collars on the stud; or, better still, a ball race may be scored in the collar and the large end of the roll, so as to provide for a ball thrust bearing. This end pressure will reduce the side pressure on the stud to quite an extent, nevertheless, so the latter may be made slightly shorter or smaller in diameter than when a parallel roll is used.

Cutting Cams of Uniform Lead in the Miller

When it comes to the cutting of cams, the shop man naturally turns to the milling machine. Many manufacturers of milling machines make attachments which may be used for cutting cams with formers. None, however, is provided with anything except hand feed. Another, and the greatest, objection to them is that if there is much work to be done, one of the most expensive machines in the shop is tied up, and there are few shops that have a surplus of this brand of machine tools. For an occasional or an experimental job, however, there is nothing better than the milling machine. As has been before remarked, curves with easy starting and stopping movements cannot be cut

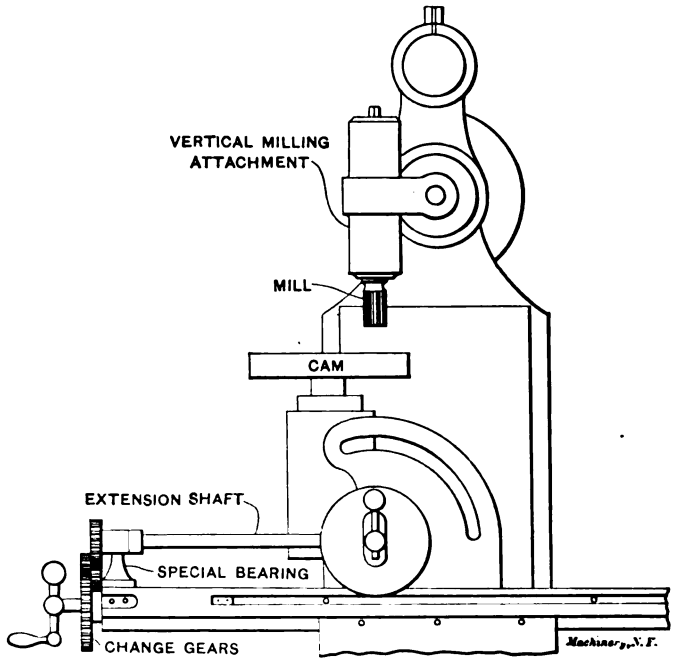

Fig. 33. Cutting a Face Cam of Uniform Rate of Throw

without formers on it, or on any other machine for that matter; but cams which require a constant rise, such as the feed cams of some machines, may be cut on it without the use of formers. With barrel cams the method is obvious, it only being necessary to gear the spiral head with the lead-screw to get the required lead, and then cut a groove of this pitch in the body with an end mill of the same diameter as the roll.

For cutting plate cams for the same kind of motion, the arrangement shown in Fig. 33 may be used, if the machine happens to have a vertical spindle milling attachment and a spiral head. All that it is necessary to provide in addition is the extension shaft shown, and the special bearing or bracket for supporting it. These parts are used

to bring the spiral head to the center of the table. The shaft is bored out at one end to fit the stud of the spiral head (called the worm gear stud in the tables); the other is turned and keyed to fit the change gears. The cams may be held in the regular chuck, or on a face-plate fitted to the head. Small ones may be held on an arbor fitted to the spindle, with large collars to hold them firmly, clamped with a nut and washer, or by an expansion bushing in the case of large holes. If they have keyways in them, and more than one or two are to be made, it will be well to fit a key in the arbor to help locate them. It is necessary to set the mill central with the spiral head to obtain correct results, as the spiral will vary if this is not done. Advantage may sometimes be taken of this when, with the regular change gears, there is no spiral of the exact pitch required, in which case the desired rise

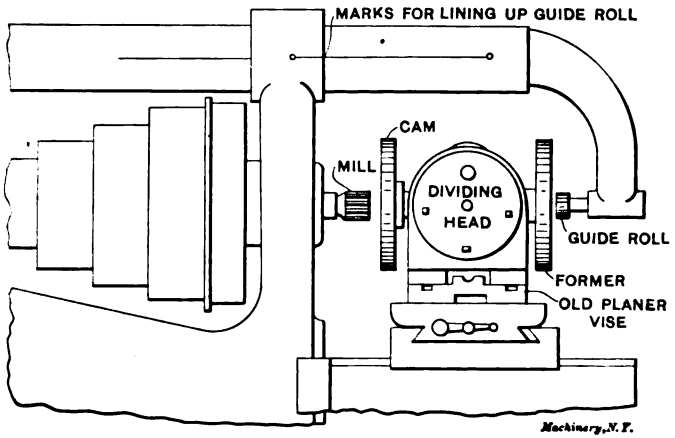

Fig. 34. Inexpensive Fixture for Milling Plate Cams to Match a Former

can be obtained by setting the head off center. This, however, will not give a uniform spiral, as the pitch will keep increasing as it leaves the center of the cam. As cam drawings are generally laid out or divided in degrees, it will be found convenient to divide the cam blank by the same method, while held in the spiral head. To do this, we may revolve the index crank through two holes in the 18-hole circle or three holes in the 27-hole circle, as many times as are necessary, each of these divisions giving exactly one degree.

Milling Machine Attachments for Cutting Cams with a Former

Examples of attachments rigged up to suit special requirements are shown in the cuts Figs. 34 and 35. To a shop with a rather limited equipment, an order came in for a lot of eight machines, which required seven cams each, most of which were of the plate type. As this class of work was new to the shop, there were no facilities for this part of the job; as usual, it was decided to do the work on the milling machine.

An old planer vise was scraped up and refitted so as to have the

movable jaw a nice sliding fit—the screw having been removed, of course. To this jaw was fitted and bolted the spiral head of the miller, in such a way that its spindle could be placed either at right angles, or parallel to the cutter, as the case required for barrel or plate cams. An arbor was made, long enough to pass through the head, carrying the former on the back end and the cam blank on the front end. A nut threaded onto the back end held the former against the end of the spindle, so there was no danger of the arbors rattling loose, no matter how badly the work and tool chattered.

For plate cams, as shown in Fig. 34, the former was made the opposite hand to that of the cam required. The overhanging arm had a center line marked on it as shown, which was matched with one on the frame so as to locate the arbor support central with the spindle. In the place of the arbor-supporting center there was fitted a stud

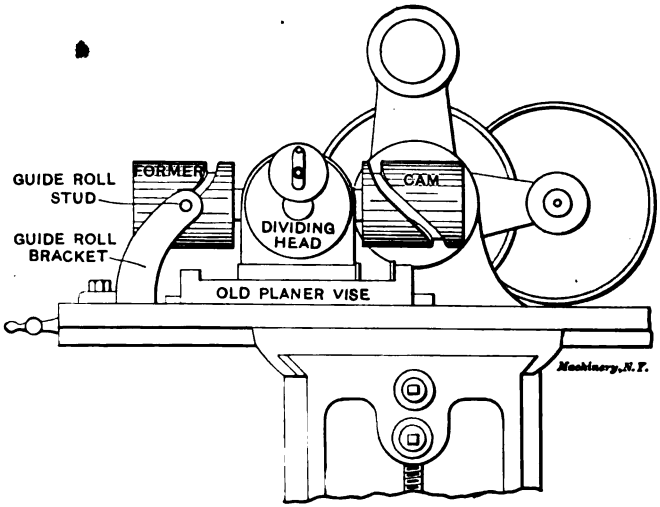

Fig. 35. Cutting a Cylindrical Cam with the Attachment shown in Fig. 34

with a roller of the same diameter as the cutter. The arm was held securely by the regular milling machine braces, which are not shown in the cut. The method of operation is obvious. The spiral head with its attached work and former was revolved, slowly, by hand. The action of the roller, held by the overhanging arm in the groove of the former, caused the head and work to slide back and forth on the ways of the planer vise, giving the proper movement between the work and the cutter to produce the desired contour of cam. The table was locked on the saddle.

For barrel cams, the attachment was rearranged as shown in Fig. 35. The former roller was held firmly in a bracket bolted to the table of the machine. As the roller is on the opposite side of the milling cutter, the former and work are set 180 degrees apart on the work arbor, otherwise they are alike. The head is relocated on the movable vise jaw to bring the axis of its spindle at right angles to the axis of

the cutter, as shown. The reader will easily make out the other details from the engraving.

Both arrangements cut good cams, considering that the first cost of the whole outfit was very little. As the formers were made accurately to drawing, the cams gave good satisfaction at fairly high speeds, but the device had the disadvantage of tying up a machine which had plenty of work waiting for it; besides, it was a tedious job to feed the index crank by hand all day long, especially when working on steel cams. For these reasons, when a duplicate order came in, a few weeks later, it was considered best to try the plan of cutting the plate cams on an old lathe, thus providing the advantage of an automatic feed, and relieving the miller of some of its work as well.

A Face Cam Cutting Attachment for the Lathe

A lathe cam cutting attachment is shown in Fig. 36. While not new in principle, it differs somewhat from the other makeshifts described.

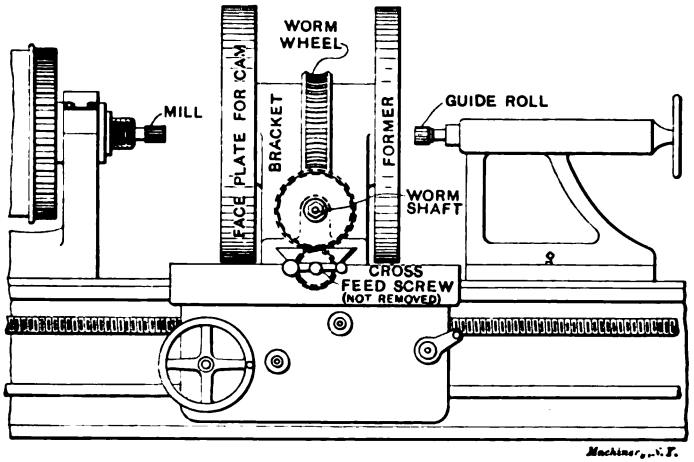

Fig. 36. Attachment with Power Feed for Cutting Face Cams

For this arrangement, the tool slide was removed from the machine and replaced with the bracket casting shown. This was fitted and gibbed to the tool-rest slide, and had its spindle bored and sides faced with a boring bar on the lathe centers. To the bracket was then fitted the cam face-plate and spindle, cast in one piece and finished all over, with the back or small end threaded to fit the former. Keyed to this spindle was a worm-gear of cast iron. In this case the worm-gear had 82 teeth. Meshing with this gear was a worm having 9/16 inch hole, and with a key having a sliding fit in the worm shaft. Bearings were provided for the worm shaft at front and back. The front support for the worm shaft was cast onto the bracket, and finished with it to fit the tool-rest slide, after which it was sawed off and fastened at the front of the carriage by the gib screw, as shown. This is the same practice as is commonly followed in making the clamp for the thread-

keyed a gear, meshing with another fitted and keyed to the front end of the cross feed screw next to the handle. The quill was cut off to make room for it. The cross feed nut was removed entirely, of course.

It will be seen that this arrangement, while having the general features of that shown in Fig. 34, provided the advantage of making use of a less costly and less over-worked machine, and allowed the use of a power feed as well, since the gearing provided for connection with the power cross feed in the apron. This gave a feed fine enough for small cams, but on large ones it was necessary to run the feed belt from the feed shaft cone to the hub of the large intermediate gear of the screw-cutting train, this being in mesh with the spindle gear. The lead-screw was removed so as not to interfere with the belt. With regular changes this gave a wide range of feeds.

The cams and formers were held to their respective face-plates by bolts. All the formers were of the positive follower type having a groove for the guiding of the roller. No weight or other means is then required for the followers to hold them to their work.

CHAPTER IV

CUTTING MASTER CAMS*

Common Method of Making Master Cams

Assuming that the master cam has been properly machined and roughed down, we will consider briefly the generally used method of finishing it. This method comprises mounting the master cam in the dividing head of a universal milling machine, and gearing the head with the feed-screw of the table so that the table will advance in proper ratio with the turning of the work in the dividing head. In Fig. 37 a master cam is mounted as above described, and held against a cutter in the vertical spindle milling attachment on a milling machine. This cutter is of the same diameter as the roll which will be used with the cam. The following description refers specifically to the cutting of the master cam for the cam shown in Chapter I, Fig. 17.

The process is as follows: Feed the work against the cutter until

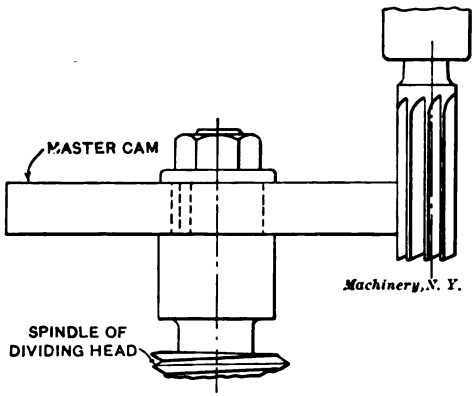

Fig. 37. Common Method of Milling Master Cams

the cutter is 3 11/16 inches from the center of the master cam. Now, with the key-slot of the master cam which is the "zero" of the cam, directly in line with the cutter, turn the work 150 degrees. This finishes a part of the outer dwell of the cam. The next operation is to feed the work against the cutter ½ inch while the dividing head turns 45 degrees. Since 45 degrees is ⅛ of 360 degrees, or one turn, we want gears which will turn the work ⅛ of a revolution while the table advances ½ inch. This is equal to one turn of the work while the table advances 4 inches. The gears on a feed-screw with four threads per inch, and 40-tooth worm-gear in the dividing head are:

Gear on worm 36,	Second gear on stud 28,
Gear on worm 36,	Gear on screw 70.

* MACHINERY, October, 1908.

Having connected these gears with care, feed the work against the cutter 0.500 inch. The gears will at the same time turn the work 45 degrees. This will give the advance of the cam. Now, with the table clamped where it is, turn the work 35 degrees further. This will give the inner dwell of the cam. Now change the gears so that the work will turn 90 degrees while the table is backed away ½ inch. This may be done by removing the first gear on the stud with 36 teeth and replacing it with a 72-tooth gear. Having done this with care to avoid disturbing the work during the change, back the work away from the cutter 0.500 inch. The gears will have turned the work 90 degrees more, the intermediate having been properly adjusted. This will give

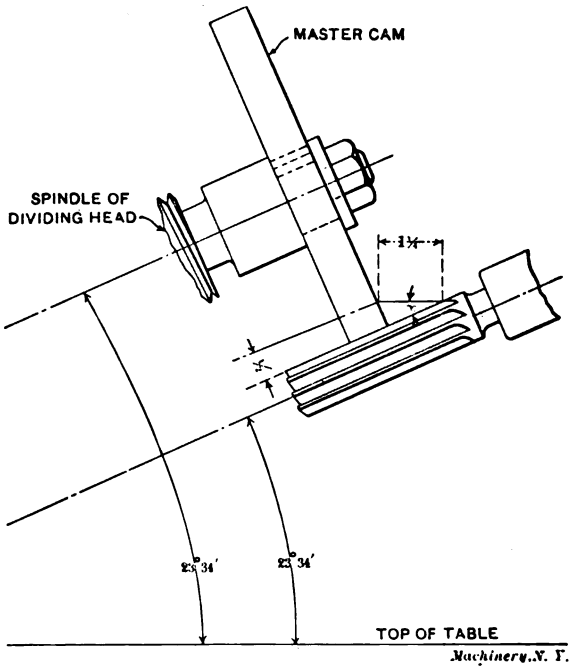

Fig. 38. Improved Method of Milling Master Cams

the retreat of the cam. Now, with the table clamped where it is, turn the work until the cutter reaches the part already finished.

The method which has just been described, is very convenient when the change gears will give the combinations that are necessary, but it often happens that the desired combination cannot be made with even an approach to accuracy. This difficulty may be overcome, however, by a method which is not in general use, but by which any desired result may be obtained.

Improved Method for Producing Master Cams

For convenience we will suppose that the master cam could not be cut with the gears named or with any others, in the vertical position.

milling attachment, but, instead of setting them in a vertical position, incline each at an angle of 23 degrees 34 minutes, as shown in Fig. 38. The reason for this will appear later.

By inspection we see that if the work be fed against the cutter, Fig. 38, the cutter will enter the work and approach the mandrel. We also see that if the angle of inclination be increased or reduced, the

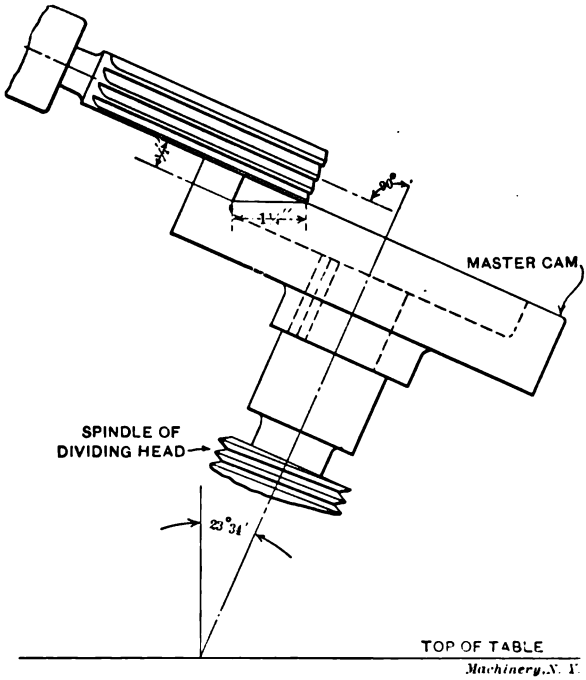

Fig. 39. Milling a Master Cam for a Drum Cam

rate with which the cutter approaches the mandrel will vary likewise. A convenient combination of gears to use in this case is one which will turn the work 360 degrees while the table advances 10 inches. This result may be obtained by using four 36-tooth gears to turn the work.

Having milled the master cam for the first 150 degrees to a radius of 3 11/16 inch as mentioned, we must find the correct distance to feed the table forward in order to make the cutter approach the mandrel ½ inch while the work turns 45 degrees. The computation is done as follows: Forty-five degrees is ⅛ of 360 degrees. Since the table is geared to advance 10 inches while the work turns 360 degrees, the table will advance ⅛ of 10 inches while the work turns 45 degrees. Thus the advance is 1¼ inch to the 45-degree turn of the work. By inspection we see that in Fig. 38 the cutter and the work-face form two sides in a right-angled triangle with a hypothenuse of ¼ inch

and one side of ½ inch. By solving, we find the angle a to be 23 degrees 34 minutes, as before mentioned. Having now properly connected the gears to mill the advance on the cam, feed the table ahead 1.250 inch. As just stated, this will make the cutter approach the mandrel ½ inch while the gears will have turned the work 45 degrees. Now with the table clamped where it is, turn the work 35 degrees more. We are then ready to begin the retreat of the cam. We must arrange gears which will turn the work 90 degrees while the table is backed 1¼ inch. By removing the 36-tooth gear from the screw and replacing it with a 72-tooth gear, we get this result. Carefully make the change so as not to disturb the work, and then back the table 1.250 inch. The gears will have turned the work 90 degrees further. Now, with the table clamped where it is, turn the work until the master cam is completed.

This system for making cams may be used only where uniform movements are required. While we have used it to entirely finish a master plate cam, any part of any cam requiring uniform motion may be

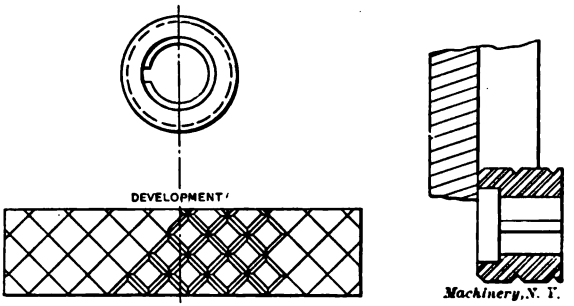

Fig. 40. Special Finishing Cutter for Cam Grooves

milled in this way with a degree of accuracy not readily obtained in any other way. In fact, the work should be as true as the machine on which it is done. The same system may be used to make a master cam for a drum cam, as shown in Fig. 39. Note, however, that the work is set 23 degrees 34 minutes from the vertical position, while the cutter inclines at right angles to, instead of parallel with, the axis of the mandrel. The same combinations of gears would be used if the drum cam action were similar to the one which we have discussed. The exceedingly low cost of making master cams by this method makes it profitable to provide a master cam for cutting the groove in a single cam.

Special Cutter for Finishing Grooved Cams

A source of constant annoyance in milling grooves in cast iron cams lies in the fact that finishing cutters quickly wear and become under size. They must then be laid aside or used for taking the roughing cuts, while a new cutter of full size is used for finishing. We will not discuss the practice of putting a piece of paper in the collet to make the small cutter run out of true. Another source of trouble, even

with cutters with spiral flutes, is the tendency of the cutter to chatter, unless it is perfectly ground and all other conditions are exactly right. Still a third trouble is in the tendency of the cutter to cut more on one side than on the other and to dig out stock in spots in the groove.

In Fig. 40 is shown an extremely simple tool, the usefulness of which cannot be overestimated for finishing grooves in cast iron cams. It is a piece of tool steel, suitably machined to mount on an arbor. It is turned on the outside, with enough stock left on for grinding, after which the spiral grooves shown in the developed surface are milled with an angular cutter. The piece is then hardened and ground to size. The cam groove which we are to finish is roughed out from 0.002 inch to 0.012 inch below size; the roughing cutter is removed from the spindle of the cam cutting machine, and this special tool is mounted in its place. The cam is then fed against the tool until the tool reaches the bottom, when the cam is turned one complete revolution. The tool will leave a true groove exactly the right size, and without chatter marks or hollows.

By reason of the form of the cutting or scraping edges, it will outlast many ordinary cutters. Used in connection with it, a single roughing cutter may be repeatedly sharpened before it becomes too small for good results.

CHAPTER V

SUGGESTIONS IN CAM MAKING

In the present chapter are collected a number of suggestions for the laying out and making of cams, together with a discussion on the shape of cam rollers for cylinder cams. These suggestions have been contributed from time to time to the columns of MACHINERY. The names of the persons who originally contributed the matter here selected, have been given in notes at the foot of the pages, together with the month and year when these articles appeared.

Making Master Cams

The method of originating cylindrical master cams, which is described in the following paragraphs, has been used successfully in a shop where considerable of this work is done. A development of the

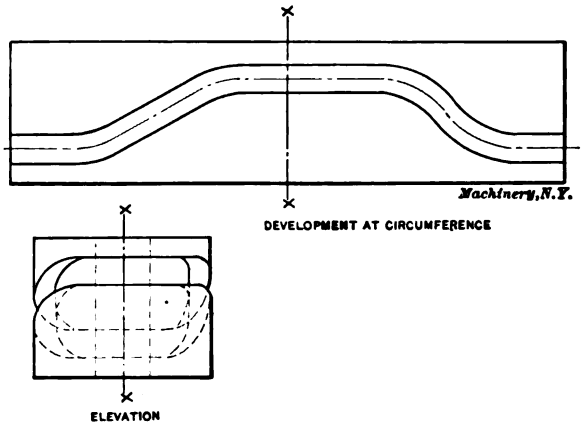

Fig. 41. Master Cam and its Development

cam at the surface of the cylinder is provided by the draftsman. If the cam is smaller than 2½ or 3 inches diameter, or has unusually steep pitches in its make-up, the development should be laid out for a diameter two or three times larger than that of the desired cam.

Suppose it is desired to make a master for the cam shown in Fig. 41. The first step is to make a template to match the development shown in the drawing. This template may be made of mild steel, of a thickness depending upon the diameter to which it is to be bent, as described later. It may be fitted to the drawing with cold chisel and file, or, if considerable accuracy is desired in the throw, the template may be held in the milling machine vise, and the straight surfaces finished to the graduations. This template, shown in Fig. 42, is made for one side of the cam groove only.

The next step is to turn up a piece of steel or cast iron, as shown at *B*, Fig. 43, to such a diameter that when the template *A* is wrapped around it, as shown, the ends will just barely meet. This diameter is about the thickness of the plate less than the diameter to which the development was laid out, but it should be left a little larger and then fitted. The plate is now clasped around the body, with the back edge pushed close up against the shoulder to insure proper alignment

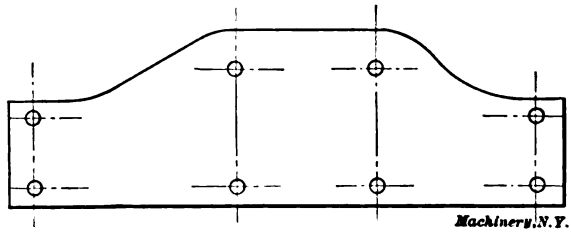

Fig. 42. Template for Making Master Cam in Fig. 41

of the working surface of the cam. If any difficulty is experienced in this wrapping process, a circular strap may be bent up with projecting ends as shown in dotted lines at *C*; with the aid of a clamp *D* the template may be stretched around smoothly. The template and the body may now be drilled and tapped for screws, as shown, and for dowels as well, if found necessary.

Scribe the contour of the cam onto the body *B*, remove the template, place the body on an arbor between the index centers of the milling machine, and take away the stock for about ⅛ inch deep, or so, 1/16

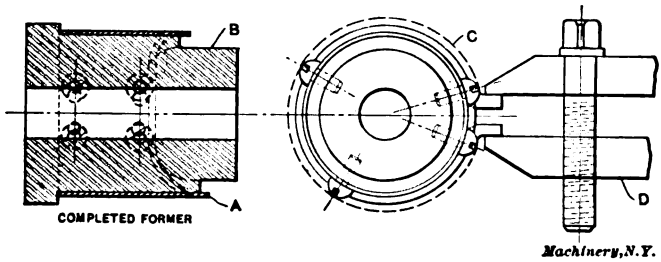

Fig. 43. Template Secured on Mandrel for Making Former

inch back of the scribed line. This, as shown in Fig. 43, is for the purpose of providing a clearance underneath the working edge of the template. The template may now be placed in position on the body once more, and fastened there. The arrangement is now ready for use as a former for making a master cam.

Fig. 44 shows a milling machine arranged for cam cutting. *E* is a casting made to grip the finished face of the column, and carrying an adjustable block *F*. Cam roll *G* is pivoted on a post which is adjustable in and out in block *F*. Our former *H*, and master cam blank *I*, are mounted, as shown, on an arbor between the index centers. By working the index worm crank, and the longitudinal feed together,

roll *G* may be made to follow the outline of former *H* in such a manner that the end mill will cut the desired groove in cam blank *I*. A slightly smaller mill may be used for a roughing cut, but it goes without saying that the roll and the finishing mill must be of about the same size if a true copy of the template is desired. It will be found

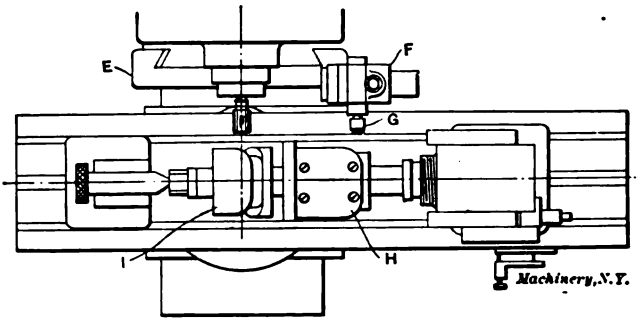

Fig. 44. Arrangement of Milling Machine when Using the Former

easier to follow the outline with the roll if the steeper curves are traced down rather than up.

A fairly good cam cutting machine for making copies of the master cam *I* may be improvised by using the attachment *E*, *F*, *G* in a rack feed machine. It might also be feasible to connect the index worm

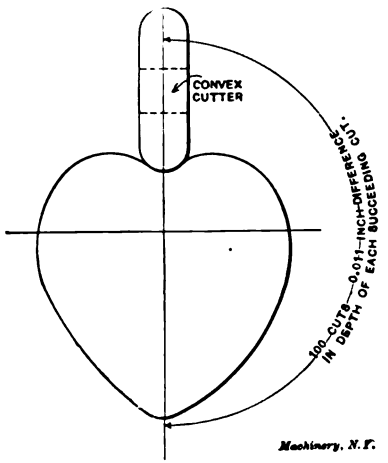

Fig. 45. Method of Cutting Cams

with the telescopic feed shaft so as to give a power feed to the contrivance. To insure accurate cams, the arrangement for holding the tool must be made stiff enough to move the table without much spring, or the table must be weighted, so as to bring the pressure of the roll constantly against one face of the master cam.*

* R. E. Flanders, July, 1904.

Simple Method for Cutting Cams Accurately

Cams are generally laid out with dividers, machined and filed to the line. But for a cam that must advance a certain number of thousandths per revolution of spindle this divider method is not accurate. Cams are easily and accurately made in the following manner. For illustration, let us make the heart cam in Fig. 45. The throw of this cam is 1.1 inch. Now, by setting the index on the miller to cut 200 teeth and also dividing 1.1 inch by 100 we find that we have 0.011 inch to recede from the cam center for each cut across the cam. Placing the cam securely on an arbor, and the latter between the

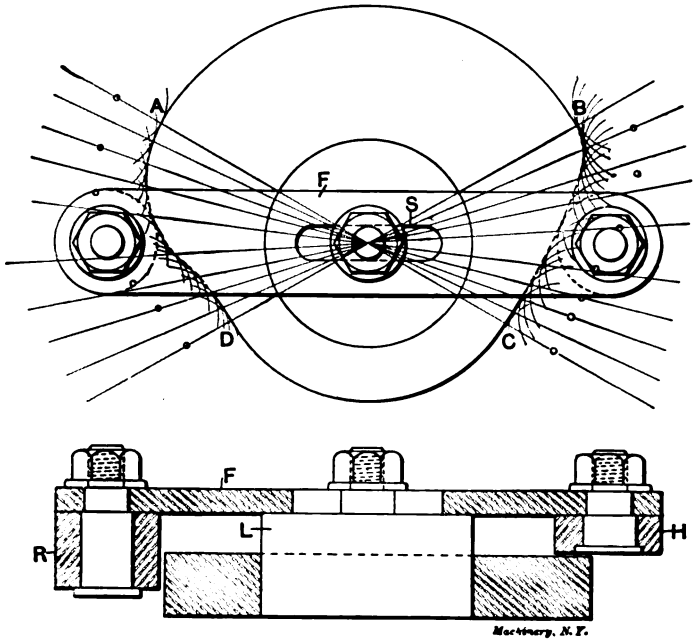

Fig. 46. Device for Correctly Laying Out Cams for Cam-Actuated Press

centers of the milling machine, and using a convex cutter, set the proper distance from the center of the arbor, we make the first cut across the cam. Then, by lowering the milling machine knee 0.011 inch and turning the index pin the proper number of holes on the index plate, we take the next cut and so on. Each cut should be marked on paper so that there will be no mistake as to number of cuts taken; when 100 cuts have been made the knee must be raised in order to complete the opposite side of the cam.*

Device for Laying Out the Cams of a Cam-Actuated Press

The cams which actuate the cutting or drawing slide of a double acting cam-press are different from other cams, inasmuch as each one

* F. E. Shailor, March, 1907.

actuates two rollers which are a certain fixed distance apart from each other. In order to avoid back-lash or springing of the connecting-rods, a fault which is to be found in most cam presses, it is evident that the rollers must both touch the face of the cam at all times. In Fig. 47 is shown the ordinary method of laying out such cams; this cut also shows the fact that this ordinary method does not accomplish the end desired. We see that in this cam both curves which give to the slide its up and down motion are constructed with the same radii, which clearly must give a curve that is faulty at certain points. The one main feature that our cam must possess can be expressed as follows: Two rollers of equal diameters, which are a certain fixed dis-

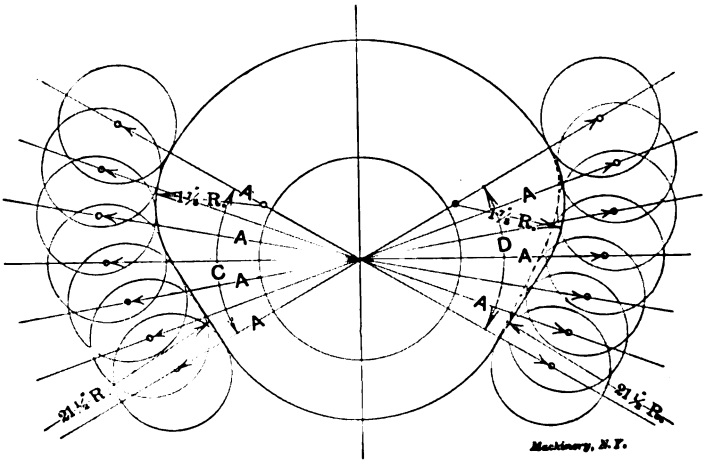

Fig. 47. Ordinary Method of Laying Out Cams

tance (*A* in Fig. 47) apart, on a line passing through center of cam, must always tangent the cam while the cam makes its revolution. Turning to Fig. 47, we see that the curve which spans angle *C* and the dotted curve which spans angle *D* accomplish this object. A little reflection will convince one that this curve cannot be constructed absolutely correct by giving the radii for both the up stroke and down stroke curve, owing to the fact that the shape of one is entirely dependent on the shape of the other.

We can, however, give the radii for one curve, and construct the other curve from it by the aid of the following device. It is assumed that in most cases it will be economical to cut a master cam, and use this for cutting the others. However, where only a few cams are to be cut, it will be well to construct one with the aid of our device, and use this one as a template for the others. Fig. 46 shows the device mentioned. First, cut the two arcs, *A B* and *D C*, which of course are perfect circular arcs of given radii, and also cut the curve *A D* from given radii. Then place center plug *L* into center hole of cam and fasten bar *F* onto *L*. Bar *F* has two rollers, *R* and *H*, fastened in such a way that their center distance is equal to the center distance of

the cam rollers in the cam press in which the cams are to be used. The rollers *R* and *H* have the same diameter as the cam rollers in the press. We now keep the roller *R* against the cam along the curve *A D* and follow this curve along its entire length. Center plug *L* will always keep the line connecting *R* and *H* in the center of the cam, and slot *S* enables us to follow the curvature of *A D*. By scratching the outline of roller *H* on the cam blank at very short distances apart, we will have a full outline on the cam blank, which must indicate the absolute curvature of *B C*. This curvature must possess all the qualifications previously set forth as absolutely indispensable for a correct cam-press cam. A cam or set of cams laid out in this manner will silence one of the principal objections usually raised against a cam-actuated press, *viz.*, back-lash or springing of the cam roller connecting-rods.*

Shape of Rolls for Cylinder Cams

The grooves and rolls for cylindrical cams are made in various ways, more or less suitable for the work to be done. Fig. 48 shows a

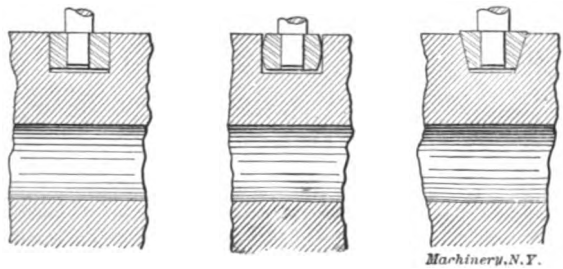

Fig. 48 Fig. 49 Fig. 50

Different Forms of Cam Rolls

straight roll and groove, Fig. 49, a roll with a rounded surface in a straight sided groove, and Fig. 50 a beveled roll and groove. In Fig. 48 the action of the roll is faulty, because of the varying surface speed of the cam at the top and bottom of the groove, due to its varying radial distance from the center line. This causes excessive wear and friction, especially in a quick running cam with steep pitches. For such cases, if the duty is light, the arrangement shown in Fig. 49 is better, as the roll has but a very small bearing surface, and is thus unaffected by a varying radial distance. For heavy work, however, the small bearing area is quickly worn down, and the roll presses a groove into the side of the cam as well, destroying the accuracy of the movement, and allowing a great amount of back-lash.

In Fig. 50 the conical shape is given to the roll with the idea of giving it a true rolling action in the groove. In most cases where this shape is used, however, the lines of the sides of the roll appear to converge to the center line of the cam, as shown in the figure. If the groove were a plain circumferential one, it would give a perfect action, like that of the pitch cones of two bevel gears rolling on each

* E. E Eisenwinter, July, 1907.

other. If the motion were in a line with the axis of the cam, without any circular movement, conditions would be perfect in Fig. 48. It is evident that in intermediate conditions, the groove must be given a shape intermediate between the two. In many cams of this variety the heavy duty comes on a section of the cam which is of nearly even pitch and of considerable length. In such a case it is best to proportion the shape of the roll to work correctly during the important part of the cycle, letting it go as it will at other times.

In Fig. 51, *b* is the circumferential distance on the surface of the cam, which includes the movement we desire to fit the roll to. The

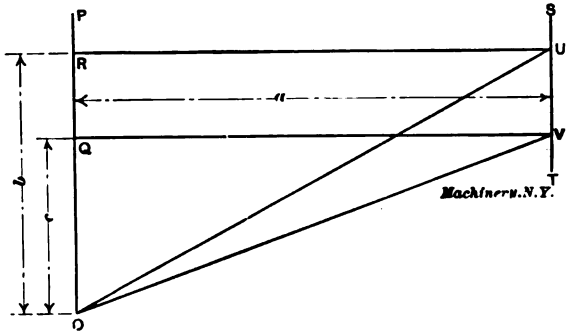

Fig. 51. Diagram Showing Method of Finding Shape of Cam Rolls

throw of the cam for this circumferential movement is *a*. Line *OU* will then be a development of the movement of the cam roll during the given part of the cycle, and *c* is the movement corresponding to *b*, but on a circle whose diameter is that of the cam at the bottom of the groove. With the same throw *a* as before, the line *OV* will be a development of the cam at the bottom of the groove. *OU* then is the length of the helix traveled by the top of the roll, while *OV* is the amount of travel at the bottom of the groove. If then the top width and the bottom width of the groove be made proportional to *OU* and *OV*, the shape will be suitable to give the result we are seeking.*

* R. E. Flanders, December, 1904.

No. 39. Fans, Ventilation and Heating.—Fans; Heaters; Shop Heating.

No. 40. Fly-Wheels.—Their Purpose, Calculation and Design.

No. 41. Jigs and Fixtures, Part I.—Principles of Jig and Fixture Design; Drill and Boring Jig Bushings; Locating Points; Clamping Devices.

No. 42. Jigs and Fixtures, Part II.—Open and Closed Drill Jigs.

No. 43. Jigs and Fixtures, Part III.—Boring and Milling Fixtures.

No. 44. Machine Blacksmithing.—Systems, Tools and Machines used.

No. 45. Drop Forging.—Lay-out of Plant; Methods of Drop Forging; Dies.

No. 46. Hardening and Tempering.—Hardening Plants; Treating High-Speed Steel; Hardening Gages; Hardening Kinks.

No. 47. Electric Overhead Cranes.—Design and Calculation.

No. 48. Files and Filing.—Types of Files; Using and Making Files.

No. 49. Girders for Electric Overhead Cranes.

No. 50. Principles and Practice of Assembling Machine Tools, Part I.

No. 51. Principles and Practice of Assembling Machine Tools, Part II.

No. 52. Advanced Shop Arithmetic for the Machinist.

No. 53. Use of Logarithms and Logarithmic Tables.

No. 54. Solution of Triangles, Part I.—Methods, Rules and Examples.

No. 55. Solution of Triangles, Part II.—Tables of Natural Functions.

No. 56. Ball Bearings.—Principles of Design and Construction.

No. 57. Metal Spinning.—Machines, Tools and Methods Used.

No. 58. Helical and Elliptic Springs.—Calculation and Design.

No. 59. Machines, Tools and Methods of Automobile Manufacture.

No. 60. Construction and Manufacture of Automobiles.

No. 61. Blacksmith Shop Practice.—Model Blacksmith Shop; Welding; Forging of Hooks and Chains; Miscellaneous Appliances and Methods.

No. 62. Hardness and Durability Testing of Metals.

No. 63. Heat Treatment of Steel.—Hardening, Tempering and Case-Hardening.

No. 64. Gage Making and Lapping.

No. 65. Formulas and Constants for Gas Engine Design.

MACHINERY'S DATA SHEET SERIES

MACHINERY'S Data Sheet Books include the well-known series of Data Sheets originated by MACHINERY, and issued monthly as supplements to the publication; of these Data Sheets over 500 have been published, and 6,000,000 copies sold. Revised and greatly amplified, they are now presented in book form, kindred subjects being grouped together. The purchaser may secure either the books on those subjects in which he is specially interested, or, if he pleases, the whole set at one time. The price is 25 cents a book.

The reliability of MACHINERY'S Data Sheets has been fully established by years and years of actual use in machine-building plants and drafting-rooms everywhere. The number of corrections it was found necessary to make in the old Data Sheets during the thorough editorial revision preceding publication in book form was relatively insignificant; but the value of the original Data Sheets has been greatly enhanced by the additional new material, never before published, by the careful arrangement and grouping together of kindred subjects, and by the helpful explanatory notes. It is the aim of the publishers to make these books absolutely authentic as reference books, notwithstanding the low price at which they are sold.

In combination with MACHINERY'S Reference Series these Data Sheet Books offer draftsmen, mechanical engineers and machinists an unusual opportunity to secure a complete working library of indispensable material.

CONTENTS OF DATA SHEET BOOKS

No. 1. Screw Threads.—United States, Whitworth, Sharp V- and British Association Standard Threads; Briggs Pipe Thread; Oil Well Casing Gages; Fire Hose Connections; Acme Thread; Worm Threads; Metric Threads; Machine, Wood, and Lag Screw Threads; Carriage Bolt Threads, etc.

No. 2. Screws, Bolts and Nuts.—Fillister-head, Square-head, Headless, Collar-head and Hexagon-head Screws; Standard and Special Nuts; T-nuts, T-bolts and Washers; Thumb Screws and Nuts; A. L. A. M. Standard Screws and Nuts; Machine Screw Heads; Wood Screws; Tap Drills; Lock Nuts; Eye-bolts, etc.

No. 3. Taps and Dies.—Hand, Machine, Tapper and Machine Screw Taps; Taper Die Taps; Sellers Hobs; Screw Machine Taps; Straight and Taper Boiler Taps; Stay-bolt, Washout, and Patch-bolt Taps; Pipe Taps and Hobs; Solid Square, Round Adjustable and Spring Screw Threading Dies.

(See back cover for additional titles)

Mills and Angular Cutters, etc.

No. 5. Spur Gearing.—Diametral and Circular Pitch; Dimensions of Spur Gears; Tables of Pitch Diameters; Odontograph Tables; Rolling Mill Gearing; Strength of Spur Gears; Horsepower Transmitted by Cast-iron and Rawhide Pinions; Design of Spur Gears; Weight of Cast-iron Gears; Epicyclic Gearing.

No. 6. Bevel, Spiral and Worm Gearing.—Rules and Formulas for Bevel Gears; Strength of Bevel Gears; Design of Bevel Gears; Rules and Formulas for Spiral Gearing; Tables Facilitating Calculations; Diagram for Cutters for Spiral Gears; Rules and Formulas for Worm Gearing, etc.

No. 7. Shafting, Keys and Keyways.—Horsepower of Shafting; Diagrams and Tables for the Strength of Shafting; Forcing, Driving, Shrinking and Running Fits; Woodruff Keys; United States Navy Standard Keys; Gib Keys; Milling Keyways; Duplex Keys.

No. 8. Bearings, Couplings, Clutches, Crane Chain and Hooks.—Pillow Blocks; Babbitted Bearings; Ball and Roller Bearings; Clamp Couplings; Plate Couplings; Flange Couplings; Tooth Clutches; Crab Couplings; Cone Clutches; Universal Joints; Crane Chain; Chain Friction; Crane Hooks; Drum Scores.

No. 9. Springs, Slides and Machine Details.—Formulas and Tables for Spring Calculations; Machine Slides; Machine Handles and Levers; Collars; Hand Wheels; Pins and Cotters; Turn-buckles, etc.

No. 10. Motor Drive, Speeds and Feeds, Taper Turning, and Boring Bars.—Power required for Machine Tools; Cutting Speeds and Feeds for Carbon and High-speed Steel; Screw Machine Speeds and Feeds; Heat Treatment of High-speed Steel Tools; Taper Turning; Change Gearing for the Lathe; Boring Bars and Tools, etc.

No. 11. Milling Machine Indexing, Clamping Devices and Planer Jacks.—Tables for Milling Machine Indexing; Change Gears for Milling Spirals; Angles for setting Indexing Head when Milling Clutches; Jig Clamping Devices; Straps and Clamps; Planer Jacks.

No. 12. Pipe and Pipe Fittings.—Pipe Threads and Gages; Cast-iron Fittings;

No. 14. Locomotive and Railway Data.—Locomotive Boilers; Bearing Pressures for Locomotive Journals; Locomotive Classifications; Rail Sections; Frogs, Switches and Cross-overs; Tires; Tractive Force; Inertia of Trains; Brake Levers; Brake Rods, etc.

No. 15. Steam and Gas Engines.—Saturated Steam; Steam Pipe Sizes; Steam Engine Design; Volume of Cylinders; Stuffing Boxes; Setting Corliss Engine Valve Gears; Condenser and Air Pump Data; Horsepower of Gasoline Engines; Automobile Engine Crankshafts, etc.

No. 16. Mathematical Tables.—Squares of Mixed Numbers; Functions of Fractions; Circumference and Diameters of Circles; Tables for Spacing off Circles; Solution of Triangles; Formulas for Solving Regular Polygons; Geometrical Progression, etc.

No. 17. Mechanics and Strength of Materials.—Work; Energy; Centrifugal Force; Center of Gravity; Motion; Friction; Pendulum; Falling Bodies; Strength of Materials; Strength of Flat Plates; Ratio of Outside and Inside Radii of Thick Cylinders, etc.

No. 18. Beam Formulas and Structural Design.—Beam Formulas; Sectional Moduli of Structural Shapes; Beam Charts; Net Areas of Structural Angles; Rivet Spacing; Splices for Channels and I-beams; Stresses in Roof Trusses, etc.

No. 19. Belt, Rope and Chain Drives.—Dimensions of Pulleys; Weights of Pulleys; Horsepower of Belting; Belt Velocity; Angular Belt Drives; Horsepower transmitted by Ropes; Sheaves for Rope Drive; Bending Stresses in Wire Ropes; Sprockets for Link Chains; Formulas and Tables for Various Classes of Driving Chain.

No. 20. Wiring Diagrams, Heating and Ventilation, and Miscellaneous Tables.—Typical Motor Wiring Diagrams; Resistance of Round Copper Wire; Rubber Covered Cables; Current Densities for Various Contacts and Materials; Centrifugal Fan and Blower Capacities; Hot Water Main Capacities; Miscellaneous Tables; Decimal Equivalents, Metric Conversion Tables, Weights and Specific Gravity of Metals, Weights of Fillets, Drafting-room Conventions, etc.

MACHINERY, the monthly mechanical journal, originator of the Reference and Data Sheet Series, is published in four editions—the *Shop Edition*, $1.00 a year; the *Engineering Edition*, $2.00 a year; the *Railway Edition*, $2.00 a year, and the *Foreign Edition*, $3.00 a year.

The Industrial Press, Publishers of MACHINERY,

49-55 Lafayette Street, New York City, U. S. A.

MACHINERY'S REFERENCE SERIES

EACH NUMBER IS ONE UNIT IN A COMPLETE LIBRARY OF MACHINE DESIGN AND SHOP PRACTICE REVISED AND REPUBLISHED FROM MACHINERY

No. 10

A Dollar's Worth of Condensed Information

Examples of Machine Shop Practice

By H. P. FAIRFIELD

THIRD EDITION

Price 25 Cents

CONTENTS

Cutting Bevel Gears with a Rotary Cutter - - - 3
Making a Worm-Gear - - - - - - - 17
Spindle Construction - - - - - - - 33

The Industrial Press, 49-55 Lafayette Street, New York
Publishers of MACHINERY

COPYRIGHT, 1911, THE INDUSTRIAL PRESS, NEW YORK

MACHINERY'S REFERENCE SERIES

This treatise is one unit in a comprehensive Series of Reference books originated by MACHINERY, and including an indefinite number of compact units, each covering one subject thoroughly. The whole series comprises a complete working library of mechanical literature in which the Mechanical Engineer, the Master Mechanic, the Designer, the Machinist and Tool-maker will find the special information he wishes to secure, selected, carefully revised and condensed for him. The books are sold singly or in complete sets, as may be desired. The price of each book is 25 cents.

LIST OF REFERENCE BOOKS

No. 1. Worm Gearing.—Calculating Dimensions for Worm Gearing; Hobs for Worm Gears; Location of Pitch Circle; Self-Locking Worm Gearing, etc.

No. 2. Drafting-Room Practice.—Drafting-Room System; Tracing, Lettering and Mounting; Card Index Systems.

No. 3. Drill Jigs.—Elementary Principles of Drill Jigs; Drilling Jig Plates; Examples of Drill Jigs; Jig Bushings; Using Jigs to Best Advantage.

No. 4. Milling Fixtures.—Elementary Principles of Milling Fixtures; Collection of Examples of Milling Fixture Design, from practice.

No. 5. First Principles of Theoretical Mechanics.

No. 6. Punch and Die Work.—Principles of Punch and Die Work; Suggestions for the Making and Use of Dies; Examples of Die and Punch Design.

No. 7. Lathe and Planer Tools.—Cutting Tools for Planer and Lathe; Boring Tools; Shape of Standard Shop Tools; Forming Tools.

No. 8. Working Drawings and Drafting-Room Kinks.

No. 9. Designing and Cutting Cams.—Drafting of Cams; Cam Curves; Cam Design and Cam Cutting; Suggestions in Cam Making.

No. 10. Examples of Machine Shop Practice.—Cutting Bevel Gears with Rotary Cutters; Making a Worm-Gear; Spindle Construction.

No. 11. Bearings.—Design of Bearings; Causes of Hot Bearings; Alloys for Bearings; Friction and Lubrication; Friction of Roller Bearings.

No. 12. Mathematics of Machine Design.—Compiled with special reference to shafting and efficiency of hoisting machinery.

No. 13. Blanking Dies.—Making Blanking Dies; Blanking and Piercing Dies Construction of Split Dies; Novel Ideas in Die Making.

No. 14. Details of Machine Tool Design.—Cone Pulleys and Belts; Strength of Countershafts; Tumbler Gear Design; Faults of Iron Castings.

No. 15. Spur Gearing.—Dimensions; Design; Strength; Durability.

No. 16. Machine Tool Drives.—Speeds and Feeds of Machine Tools; Geared or Single Pulley Drives; Drives for High Speed Cutting Tools.

No. 17. Strength of Cylinders—Formulas, Charts, and Diagrams.

No. 18. Shop Arithmetic for the Machinist.—Tapers; Change Gears; Cutting Speeds; Feeds; Indexing; Gearing for Cutting Spirals; Angles.

No. 19. Use of Formulas in Mechanics.—With numerous applications.

No. 20. Spiral Gearing.—Rules, Formulas, and Diagrams, etc.

No. 21. Measuring Tools.—History and Development of Standard Measurements; Special Calipers; Compasses; Micrometer Tools; Protractors, etc.

No. 22. Calculation of Elements of Machine Design.—Factor of Safety; Strength of Bolts; Riveted Joints; Keys and Keyways; Toggle-joints.

No. 23. Theory of Crane Design.—Jib Cranes; Calculation of Shaft, Gears, and Bearings; Force Required to Move Crane Trolleys; Pillar Cranes.

No. 24. Examples of Calculating Designs.—Charts in Designing; Punch and Riveter Frames; Shear Frames; Billet and Bar Passes; etc.

No. 25. Deep Hole Drilling.—Methods of Drilling; Construction of Drills.

No. 26. Modern Punch and Die Construction.—Construction and Use of Subpress Dies; Modern Blanking Die Construction; Drawing and Forming Dies.

No. 27. Locomotive Design, Part I.—Boilers, Cylinders, Pipes and Pistons.

No. 28. Locomotive Design, Part II.—Stephenson Valve Motion; Theory, Calculation and Design of Valve Motion; The Walschaerts Valve Motion.

No. 29. Locomotive Design, Part III.—Smokebox; Exhaust Pipe; Frames; Cross-heads; Guide Bars; Connecting-rods; Crank-pins; Axles; Driving-wheels.

No. 30. Locomotive Design, Part IV.—Springs, Trucks, Cab and Tender.

No. 31. Screw Thread Tools and Gages.

No. 32. Screw Thread Cutting.—Lathe Change Gears; Thread Tools; Kinks.

No. 33. Systems and Practice of the Drafting-Room.

No. 34. Care and Repair of Dynamos and Motors.

No. 35. Tables and Formulas for Shop and Drafting-Room.—The Use of Formulas; Solution of Triangles; Strength of Materials; Gearing; Screw Threads; Tap Drills; Drill Sizes; Tapers; Keys; Jig Bushings, etc.

No. 36. Iron and Steel.—Principles of Manufacture and Treatment.

No. 37. Bevel Gearing.—Rules and Formulas; Examples of Calculation; Tooth Outlines; Strength and Durability; Design; Methods of Cutting Teeth.

No. 38. Grinding and Grinding Machines.

(See inside back cover for additional titles)

MACHINERY'S REFERENCE SERIES

EACH NUMBER IS ONE UNIT IN A COMPLETE LIBRARY OF MACHINE DESIGN AND SHOP PRACTICE REVISED AND REPUBLISHED FROM MACHINERY

NUMBER 10

EXAMPLES OF MACHINE SHOP PRACTICE

By H. P. FAIRFIELD

THIRD EDITION

CONTENTS

Cutting Bevel Gears with a Rotary Cutter - - 3
Making a Worm-Gear - - - - - - - 17
Spindle Construction - - - - - - - 33

Copyright, 1911, The Industrial Press, Publishers of MACHINERY,
49-55 Lafayette Street, New York City

CHAPTER I

CUTTING BEVEL GEARS WITH A ROTARY CUTTER*

Pictures are a great help in understanding a machine shop operation. It is often possible, with a few halftones, to convey ideas that would require many pages of written matter to express them. In the present pamphlet advantage has been taken of this facility of the photograph to express ideas, so that a long story has been told in comparatively few words.

While the process of forming the teeth of a bevel gear, by milling them with a rotary cutter, is not easy to describe without telling how to make a drawing of the blank, it seems best to leave the designing and drawing for a treatise more particularly dealing with this subject alone. The average apprentice approaches the problems of the ma-

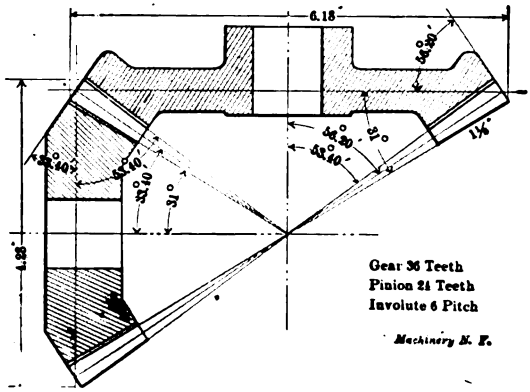

Fig. 1. Essential Dimensions of the Gear to be Cut

chine shop with hardly enough knowledge of the art of making drawings to enable him to read them, to say nothing of making them.

The Drawing

Fig. 1 represents the drawing of a bevel gear and its pinion, as it is given to the workman. It is to be noted that draftsmen are not all bound by the same conventions, but this drawing is as it would be made by at least one large firm who cuts many bevel gears. All dimensions other than those necessary to our description have been omitted to avoid confusion. The description will, therefore, be confined to those operations bearing upon the subject at hand, and will show what, in the author's estimation, should be the best order of operation to insure accuracy, convenience, and speed. In machining

* MACHINERY, October, 1907.

the blank to the required angles and dimensions, use is made of an engine lathe fitted with a compound tool-slide, and the tooth-cutting operations are made in a milling machine fitted with a universal index head, with graduated dials on its feed screws.

In the drawing Fig. 1 are stated the angles needed to turn up

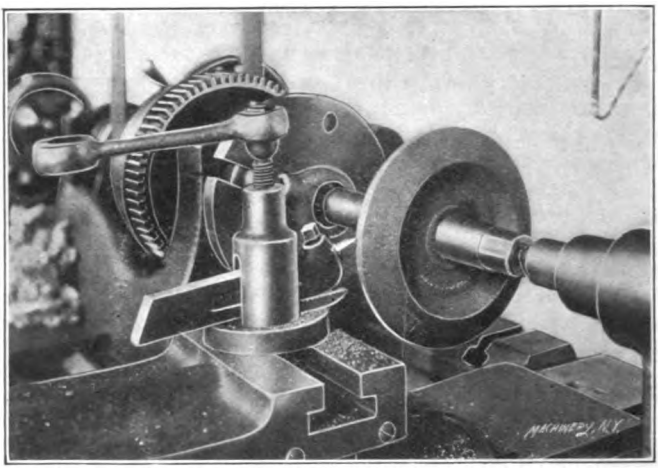

Fig. 2. Sizing the Outside Diameter of the Blank

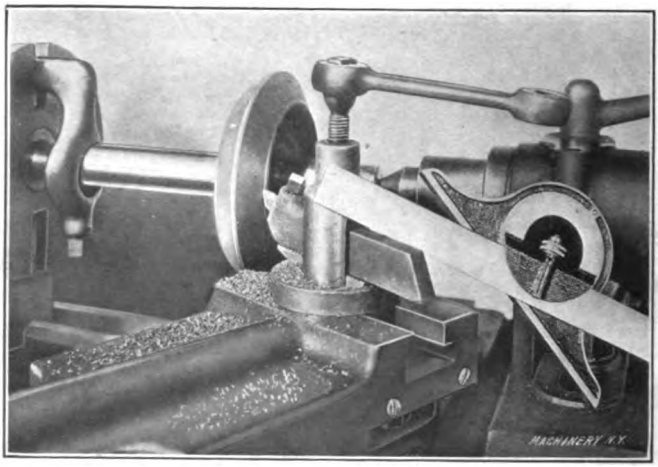

Fig. 3. Turning the Face

the blank, and those needed when cutting the teeth. Those angles which are to be worked out in the lathe, using the compound slide, are given from a line normal to, or at right angles to, the center line of the blank. When given in this way, they conform to the graduations on the compound slide of the lathe, and all calculations by the workman in the shop are avoided. The cutting angle is figured from

the center line to conform with the graduations upon the milling machine. The diameter of the gear, as drawn, is 6.18 inches, and operation No. 1 is to size the blank to this diameter. While some draftsmen in bevel gear work give the outside diameter to thousandths of an inch, the nearest hundredth is sufficiently accurate.

Turning the Blank

Fig. 2 shows operation No. 1, sizing the outside diameter, which leaves a flat surface easy to caliper.

Operation No. 2, shown in Fig. 3, is the turning of the face angle. As given on the drawing, this angle is 31 degrees, and the compound slide, as shown in the cut, is set to conform to this. In setting the slide, the nearest quarter degree is all that is needed. A sufficient

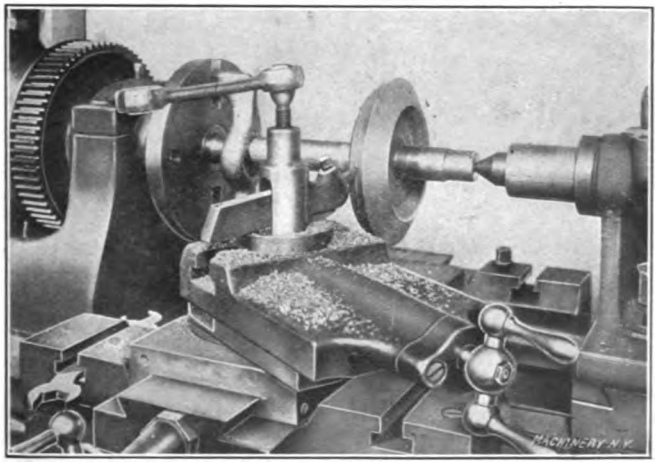

Fig. 4. Turning the Outer Edge

amount of stock is removed by this operation to leave a well-finished surface for the tops of the teeth.

Fig. 4 shows operation No. 3, which is the forming of the back angle, or angle of edge. As given, this is 56 degrees 20 minutes, and the compound rest is reset to read to the required angle. In this operation, sufficient stock is removed to bring this surface up to an edge with the one previously formed. Note that in all the operations the tool is adjusted normal to the surface operated on, to obtain the maximum cutting efficiency.

Fig. 5 shows operation No. 4, the finishing of the inner ends of the teeth. As these are parallel to the outer ends, the compound slide remains as set for operation No. 3. Sufficient stock is removed to make the teeth of the length required on the drawing (that is, 1⅛ inch), and an ordinary steel rule obtains this measurement with sufficient accuracy. Filing or scraping the surfaces puts the blank in readiness, so far as the teeth are concerned, for the milling operations. If the performed operations have been done on a reliable lathe, and care

has been taken in reading the figures on the drawing and the graduations on the compound slide, the blank must agree with the drawing. It is well, however, to check the angles with a protractor, and Fig. 6 shows this. While the blank and the tool would ordinarily be held in the hands when making this test, for convenience in photographing they are placed as shown.

With the drawing dimensioned as shown, and the operations followed as numbered, it will be noted that so far the greatest simplicity has resulted in the setting of the machine and in the measurements made.

Selecting the Cutter

The tooth-cutting operations are made in the milling machine, but the points to be brought out will apply to gear-cutting machines as

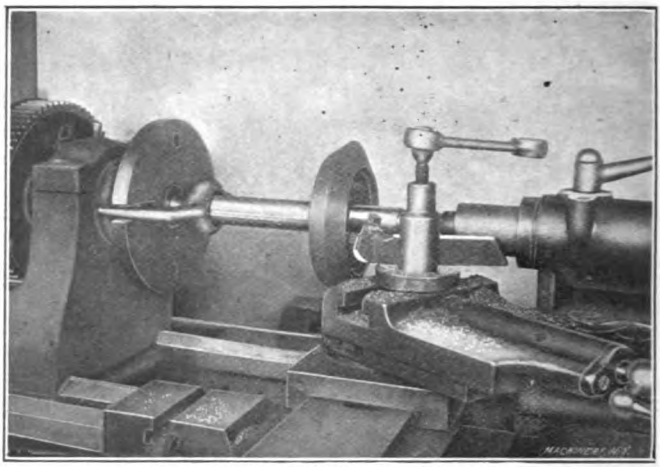

Fig. 5. Turning the Inner End of the Teeth

well, with slight modifications due to the different mechanism. There are in use at least four different methods by which the machines may be used to form the teeth, and as all bevel gears cut with a rotary cutter must be in error, some latitude as to means can be allowed the workman. For the pair of gears shown, the diametral pitch at the large end of the tooth is 6, since the gear has 36 teeth, or 6 teeth for each inch of the largest pitch diameter. At the inner end of the gear the pitch diameter is much less. The number of teeth is the same, however, and thus the pitch is finer; or, in other words, there are a greater number of teeth per inch of pitch diameter. Suppose, for example, that the pitch diameter at the inner end of the teeth is four inches, then the number of teeth per inch would be nine, and the pitch would therefore be nine, or, as it is commonly written, 9 P.

In choosing a cutter with which to form the teeth, it will thus be seen that if it is the right pitch for one end of the teeth, it must be in error for the other, and it is for this reason that all bevel gear teeth cut by milling are at the best a compromise for the true shape. As

noted before, there are four methods of compromising, but the one chosen for illustration here is that usually termed the "rolling method," meaning that the gear is rolled to and fro for adjustment with the cutter.

To choose a cutter for spur gear cutting, the pitch and number of teeth being given, is a simple matter if the table below, taken from the catalogue of the Brown & Sharpe Mfg. Co., is used. To choose a cutter for milling bevel gears, however, the method given below, and illustrated in the diagram, Fig. 7, is used. Instead of taking a cutter for the number of teeth which one wishes to cut, it may have to be for a much larger number. While this rule is not universally followed and has its limitations, it covers most cases better than any other,

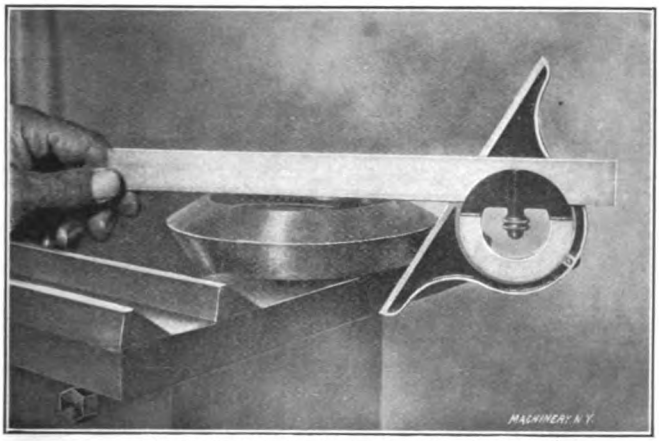

Fig. 6. Testing the Accuracy of the Angles

and a cutter chosen by this method is the correct curvature for the teeth at the extreme large end, though it cannot have the right curve for the rest of the tooth. It must, also, be so chosen as to be at least as thin as the width of space at the inner end of the teeth. This

RANGE OF CUTTERS IN STANDARD INVOLUTE SERIES

No. 1	will cut	wheels	from	135	teeth to a rack.	
" 2	"	"		55	"	134 teeth.
" 3	"	"		35	"	54 "
" 4	"	"		26	"	34 "
" 5	"	"		21	"	25 "
" 6	"	"		17	"	20 "
" 7	"	"		14	"	16 "
" 8	"	"		12	"	13 "

makes it necessary to use special cutters, somewhat thinner at the pitch line than those used for spur gears. The method is as follows:

Measuring the dimension in the drawing, Fig. 1, which corresponds to the line *a b*, Fig. 7, and doubling it, gives a length of 10¾ inches, nearly. This dimension is, however, not indicated in Fig. 1. Multi-

plying this by the pitch, gives the number of teeth for which the cutter must be chosen, or sixty-four, approximately. In the table on the previous page, a No. 2 cutter is listed to cut from 55 to 134 teeth, and is the one selected. When it is inconvenient to measure the back cone radius, use is made of the following formulas, taken from Brown & Sharpe Mfg. Co.'s catalogue (see Fig. 7 for notations):

$$\text{Tan } a = \frac{N_a}{N_b} \qquad (1)$$

$$\text{No. of teeth for which to select cutter for gear} = \frac{N_a}{\cos a} \qquad (2)$$

$$\text{No. of teeth for which to select cutter for pinion} = \frac{N_b}{\sin a} \qquad (3)$$

If the gears are miters, or alike, only one cutter is needed. If one is larger than the other two cutters may be needed.

Setting-up the Work for Trial Cuts

The cutting angle of the gear is 53 degrees 40 minutes, given from the center line of the gear, which corresponds to the center line of

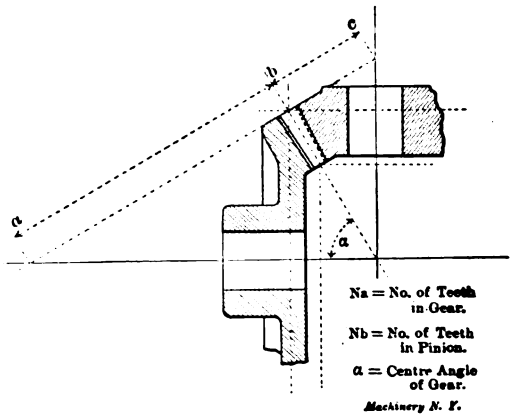

Fig. 7. Diagram Showing Method of Selecting Cutters for Bevel Gears

the index centers. The index head is therefore swiveled in the vertical plane to the position shown in Fig. 8, or through an arc of 53 degrees 40 minutes by the graduations. The cutter is placed in cutting position upon the milling machine arbor, which must run true. Fig. 9 shows how the cutter and the index center are brought into alignment by adjusting the cross-slide. Most makes of cutters have a center line scribed on the tops of the teeth, or on the back face, to set the center to in making this adjustment. Be sure that the center runs true. It is best to try it with a test indicator. The gear blank, as shown in Fig. 10, is mounted firmly on a special true-running arbor, with a taper shank to fit the index head.

Fig. 8 also shows the index pin and adjustable sector set for spacing

thirty-six teeth on the blank. Although use can be made of the printed table which comes with the milling machine to learn the turns and parts of turns to make when indexing, a very simple calculation gives it, when the number of revolutions which must be made with the index crank to give the work a complete turn, is known. In most milling machine index heads, this number is 40, as they have a

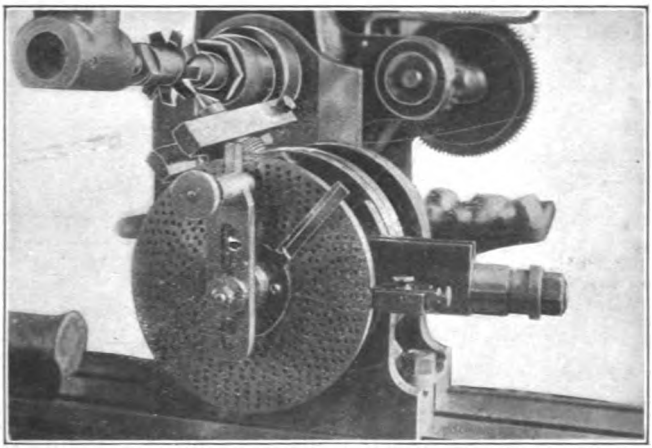

8. Spiral Head Set for Proper Cutting Angle and Indexing

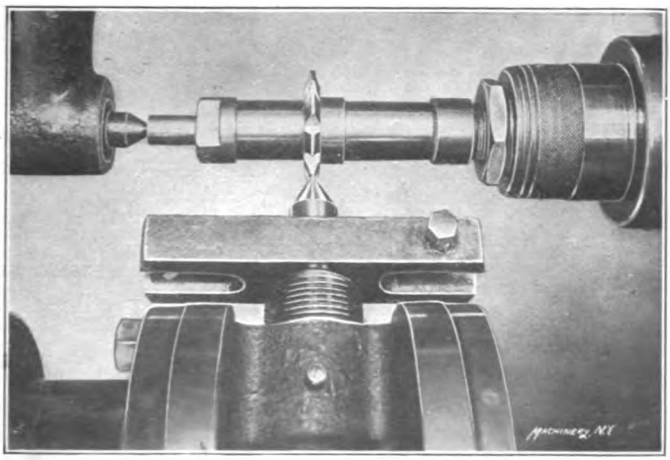

Fig. 9. Setting the Cutter Central with the Work Spindle

40-toothed worm gear and a single-thread worm; 40, then, is the numerator of a fraction, the denominator of which is the required spacing; or, in other words, dividing forty by the number of spaces required gives the number of turns and parts of a turn of the index crank. In this case, $40/36 = 1\ 4/36 = 1\ 1/9$ revolution, or one turn and one ninth of a turn. Six holes in the 54-hole circle is taken to give

the one-ninth of a turn required. Any circle of holes evenly divisible by nine, can, of course, be used.

With the blank set to the required cutting angle, the next step is to make a line on its back edge showing, as in Fig. 10, the depth of the teeth at this point. This is done with a "depth of gear tooth" gage of the proper pitch. Such gages may be bought in different sizes for different pitches. Be careful to hold it parallel to the back edge of the blank when scribing the line.

Fig. 11 shows the machine and work completely set up, and adjusted for the trial cut. This cut must not be so carelessly made as to be

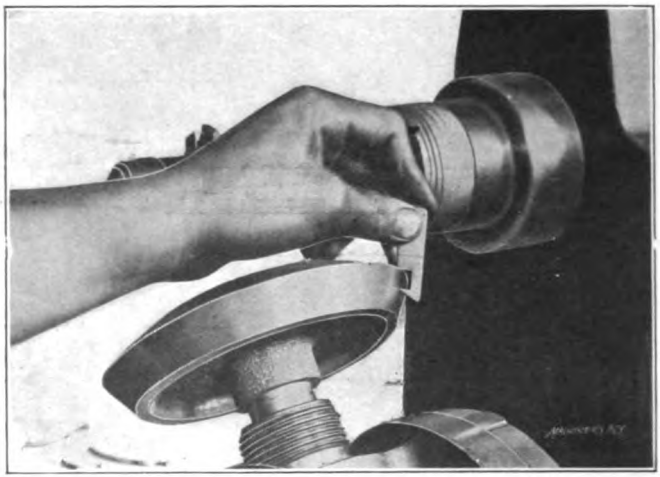

Fig. 10. Marking the Depth of Tooth with Depth Gage

deeper than the tooth depth line marked out in Fig. 10, and several trial cuts, each deeper than the other, may well be made in getting the required depth for the first space.

Approximating the Correct Tooth-form by Rolling

Fig. 12 shows the first space cut to depth. The work is then indexed for another cut. Fig. 13 shows the trial tooth left by the two trial cuts completed. It is noticeable that the tooth is much wider on the pitch line than it should be, at the outer end. This may also be true of the inner ends at the pitch lines, and is certain to be true of the inner ends above the pitch line when the gear is finished, unless this part of the tooth is afterward filed somewhat. The coarser the pitch and the longer the tooth face, the more this latter shows. The rolling method of approximating the true tooth shape starts by making several central cuts, such as shown in Fig. 14, giving teeth which may be used to test adjustments by as they are made. With the cross-feed index set at zero, the table is moved off center *toward* the column of the machine a trial distance, and then clamped immovably. By means of the index crank, the work blank is rotated or "rolled" back toward the cutter again to just admit it to the space at the inner end of the

teeth. Do not disturb the adjustable sector when doing this, but leave it to mark the hole which is correct for the central position.

Rolling the gear is equivalent to swiveling the tooth about the apex of the cone, and allows the cutter to take a heavier shaving or chip

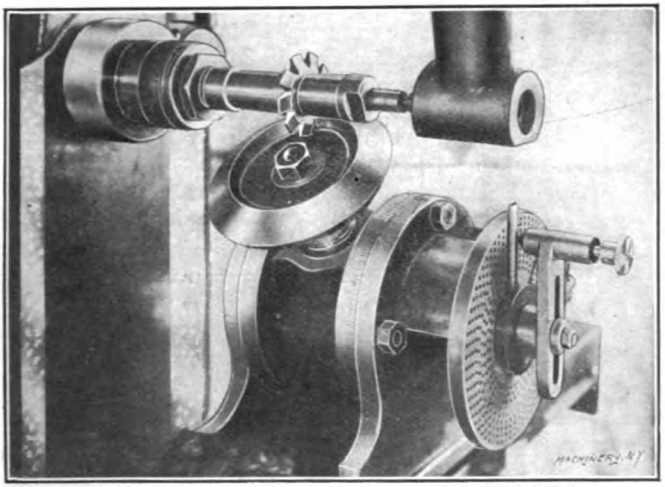

Fig. 11. Work in Place on Machine, ready for Trial Cut

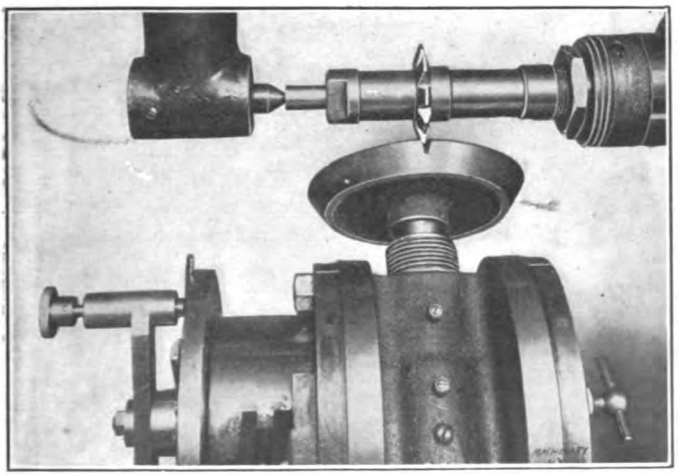

Fig. 12. Trial Cut Completed

at the outer end of the tooth than it does at the inner end. The greater the adjustment off center and the more the blank is rolled, the greater this difference.

If, for example, the cutter leaves the trial teeth accurate in thickness at their inner ends, the blank would be rolled, when making adjustments, to allow the cutter to just enter the trial cut at that

ther along.

After the trial cut has been taken upon one side of the tooth, the index pin and the cross-slide should be returned to their original central position, and the blank indexed one tooth, to bring the cutter to the side opposite to that already thinned off. Afterward set the cross slide off center *away* from the column, and roll the blank toward the cutter again, the same amount as before, until the cutter just enters the space at the inner end. Thin off this side. If the larger end of the tooth is still too thick, it shows that the cross-slide was not set off from its central position a great enough distance, and another trial cut must be made on each side of the tooth, carefully duplicating the operations just noted, but giving additional movement to the cross-

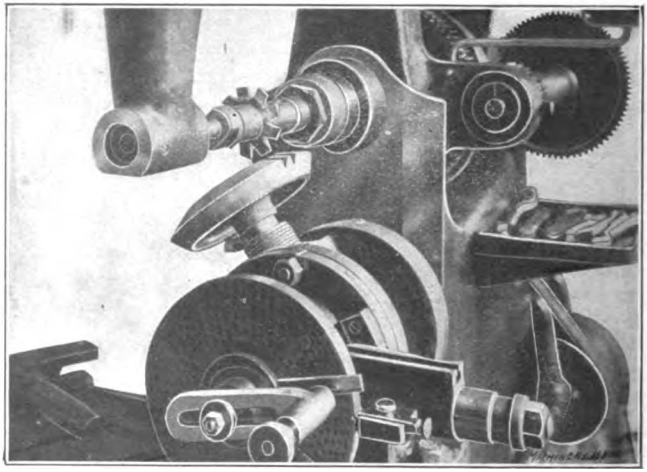

Fig. 13. Trial Tooth Formed by Two Trial Cuts

slide and the rolling of the blank, repeating this until the gage shows the right thickness at the outer end of the teeth as in Fig. 14. The gage shown is one of a form common in gear-cutting practice. The notch in the end of it has a depth equal to the addendum, and a width equal to the tooth thickness of the pitch for which it is intended—6 in this case.

As previously stated, all this has been done on the supposition that the thickness of the cut left the space and teeth at their inner ends the right width. If the cutter is too thin to do this, the teeth must be shaved on their sides at the smaller as well as at the larger ends. It is then necessary to observe that neither end is cut too narrow, and the cross-slide adjustments, as well as the rolling of the blank, must allow for shaving the tooth its entire length.

In the gear shown, the cutter was considerably thinner, and the tooth was shaved its entire length. In making the trial cut, the cross-

slide was offset 0.010 inch, and the blank rolled four holes in the 54-hole circle, and the trial tooth shaved upon both its sides. These amounts were afterward increased to an offset of the cross-slide to 0.015 inch each side of the zero line, and seven holes in the 54-hole circle. This gave a tooth that gaged up as desired at its inner and outer ends on the pitch line.

If the teeth of the pinion are not to be filed at their inner end above the pitch line to bring that portion of the tooth more nearly to correct shape than the cutter will leave it, it may be necessary to widen the space at the inner ends of the gear to give additional room. On the finer pitches, the cutter leaves the teeth so nearly correct that they need not be filed; but in the coarser pitches, filing is quite necessary.

Cutting the Teeth

Having established the amount off center, and the angle to roll the blank, proceed to cut the rest of the teeth. If the pitch is rather

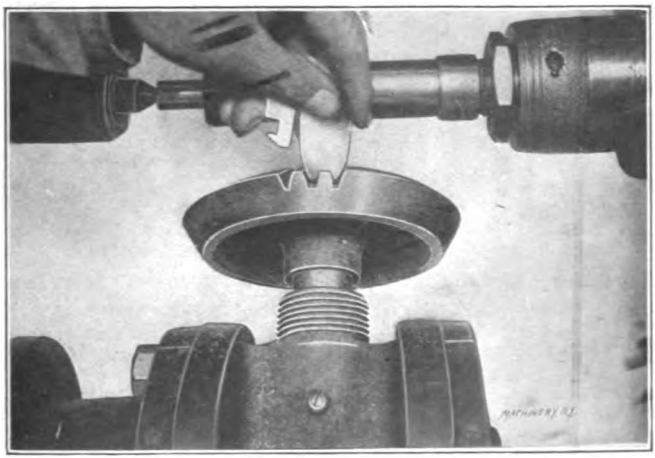

Fig. 14. Testing Accuracy of Settings for Approximating the True Tooth-form

coarse, three cuts may be necessary all the way around each blank. In the finer pitches, however, two cuts around are sufficient. In the case of three cuts, the first is a central cut made as already shown with the standard cutter, all the way around, and then the two thinning cuts follow. Some gear-makers use a so-called "stocking cutter" in making the central cuts, afterward thinning the teeth with a standard cutter as noted. This undoubtedly leads to less sharpening of the standard cutter.

If the pitch allows two cuts around the blank to be sufficient, the first is, of course, made with the table offset and the work rolled to shape one side of the teeth, and the second, with the machine and work set to shape the opposite side, each cut going all around the blank.

Fig. 15 shows the amount that the space is wider than the cutting edge of the cutter; and Fig. 19 is a general view of the entire machine as set up.

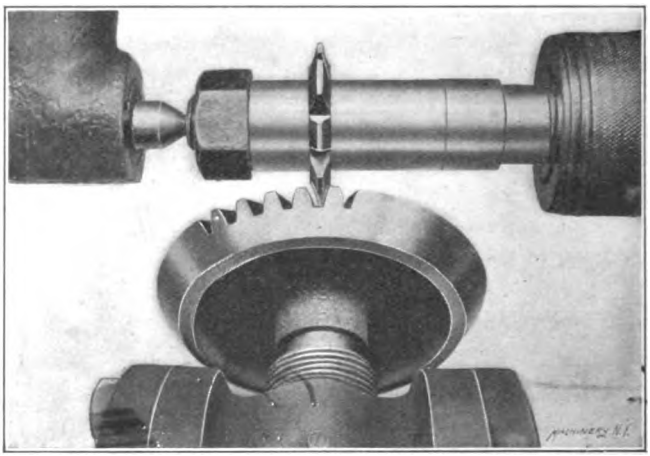

Fig. 15. Cutter Completing the Tooth, showing Widened Tooth Space

General Directions

Finally, it may be well to note some precautions: Mounting the work as shown, with all "overhangs" as short as possible, still leaves the outer end unsupported. Care must therefore be taken to have the taper arbor in the index head well fitted and driven firmly in place;

Fig. 16. Cross-feed Dial when Work Spindle is Set Central

Fig. 17. Cross-feed Dial Set for Cutting Outer Side of Tooth

Fig. 18. Cross-feed Dial Set for Cutting Inner Side of Tooth

the work must also be mounted upon the outer end of the arbor so that it will not slip under the action of the cutter.

The cutter must be carefully ground sharp, with each cutting edge radial and exact, relative to the center hole. The cutter must also be in coincidence with the center line of the index centers or the teeth will "hook," relative to the apex of the cone as well as to the radius.

In making adjustments of the cross-slide or with the index pin, see that the final motions are always in the same directions. This prevents errors of adjustment due to lost motion or backlash. For example, in Fig. 16 the zero setting was made by moving the cross-feed handle to the right until the dial read to the zero mark. That shown in Fig. 17 was a continuation of this motion, and in Fig. 18

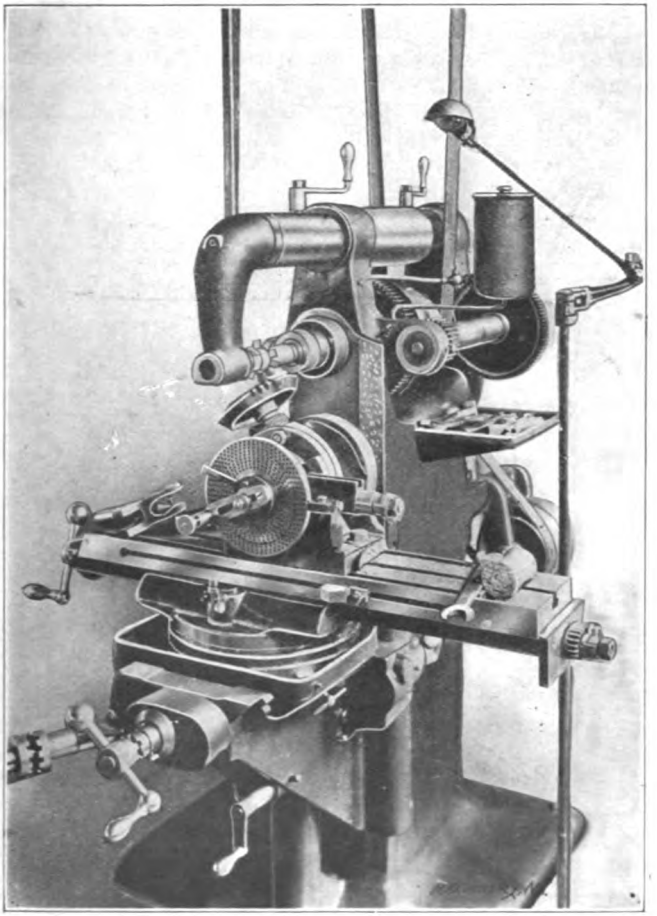

Fig. 19. General View of Machine as Arranged for Cutting Bevel Gears

the handle was reversed at least a half revolution, and then turned in a right-hand direction to the required graduation. All milling machines and index heads are provided with means of clamping the several sides and swivels, and these should always be tightened while the cut is being made, and, of course, loosened when adjusting. After the indexing for a cut, place the counting sector in readiness, as shown in the cuts, for the next adjustment.

In turning up the blanks, machine an extra one to use as a "dummy" for setting the machine. This dummy may be used until cut up. Finally, settle upon a regular order of operations, follow it until a habit is formed, and fewer errors will result.

As has been intimated, the method of cutting bevel gears just described, is only an approximate one. There is no possible way of cutting them to the theoretically perfect shape with formed milling cutters. There are probably more gears cut in the way we have described, however, than by any other method, as it requires the simplest outfit of tools, and can be done in any ordinary milling machine which is provided with an indexing head. This method should not be used on large gears—especially those which are to run at a high rate of speed and transmit considerable power. Under these conditions, bevel gears cut with rotary cutters will be inefficient and noisy, and will be far from durable. For such service, the teeth should be planed by some one of the various machines made for the purpose, either by the templet or generating processes.

There are so many gears cut with this method, however, that the ability to use it should be a part of the training of all machinists who class themselves as "all-around" workmen.

CHAPTER II

MAKING A WORM-GEAR*

The machinist is apt to concern himself but little with the steps taken by others to produce the castings which he is given to finish into machine parts. He seldom gives the designer or draftsman a thought,

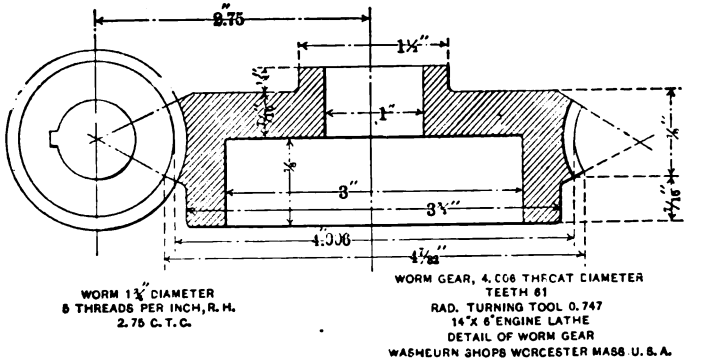

Fig. 20. Drawing of the Worm-gear to be Made

and the patternmaker or molder gets less. It may therefore be of interest to follow along the path a piece has taken, from its first inception in the designer's brain, to the point where it becomes a finished

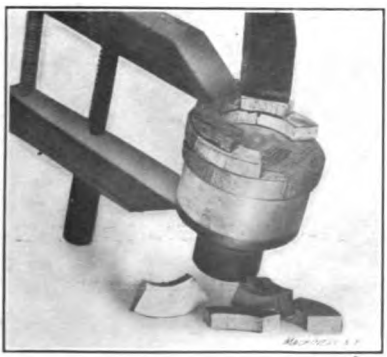

Fig. 21. Gluing Up the Pattern for the Worm-gear

Fig. 22. The Hub and Finished Face of the Pattern

part of a useful machine, and to count the footsteps. Take, for example, a worm-gear such as that shown in Fig. 20, which is part of a friction feed mechanism. Topsy "just growed," but this is not true

* MACHINERY, July, 1906.

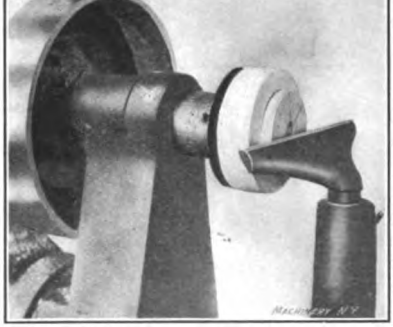

Fig. 23. Turning the Wood Chuck

Fig. 24. Turning the Seat for the Hub

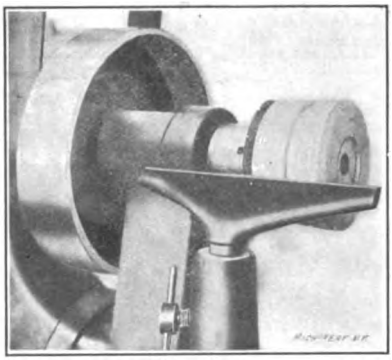

Fig. 25. The Seat Completed

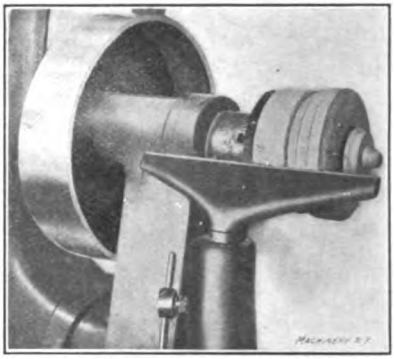

Fig. 26. Trying in the Hub

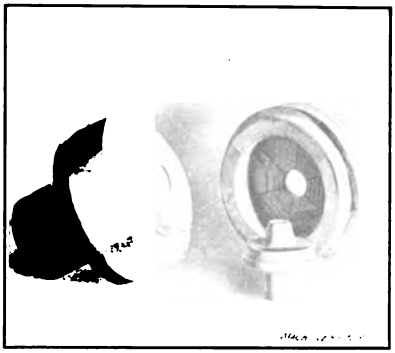

Fig. 27. The Completed Body and Hub

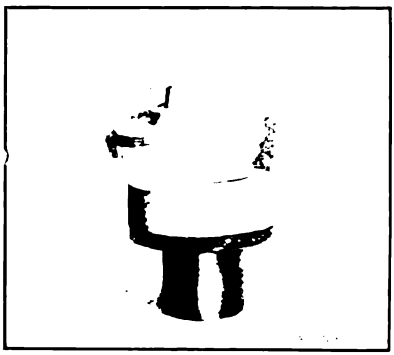

Fig. 28. The Assembled Pattern

of a machine part, either in design or workmanship, and even so simple a piece as the one shown represents thought by the designer, patternmaker and foundryman. The designing draftsman should be

something of a patternmaker, foundryman and machinist, in addition to his ability to assign proper values to form, strength, velocity ratios, position, etc. On the work of the draftsman depends largely the possibility of economic production in the shop, and if the machine

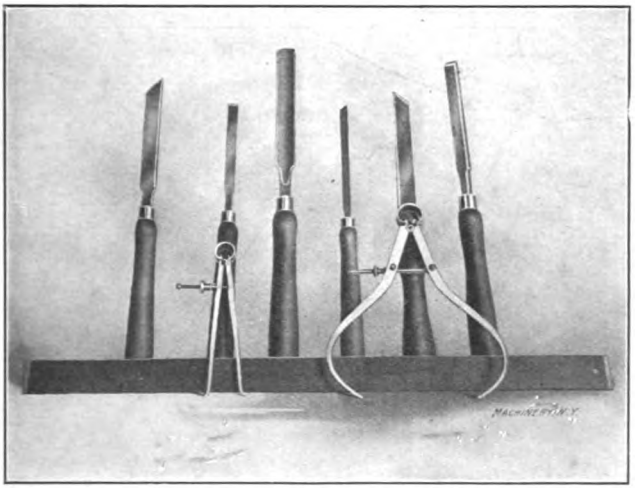

Fig. 29. Tools Used by Patternmaker

details he designs cannot be easily and cheaply made, it is, in most cases, his lack of proper understanding of shop processes which is to blame for this condition.

The patternmaker is concerned with questions of shrinkage and warping of the materials used in making the pattern. He is also

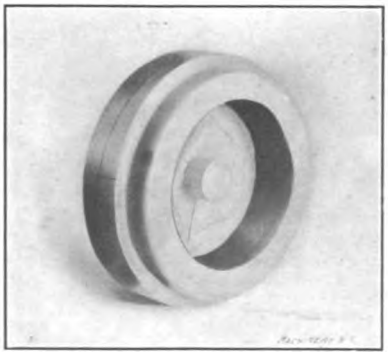

Fig. 30. Pattern Finished and Shellaced

concerned with the foundry and machine shop problems of shrinkage, draft, finish, ease of molding and machining. Fig. 21 shows the best method of gluing up a pattern to provide for uniform shrinkage, to prevent serious change of form by warping, and to give strength.

Such a pattern finishes nicely under the cutting tool, as shown in Fig. 22. The core print and hub are, however, turned from the solid and afterward glued into place.

Wood mounted on a faceplate and afterward used to hold work by gluing, shouldering, recessing or any similar manner is termed a

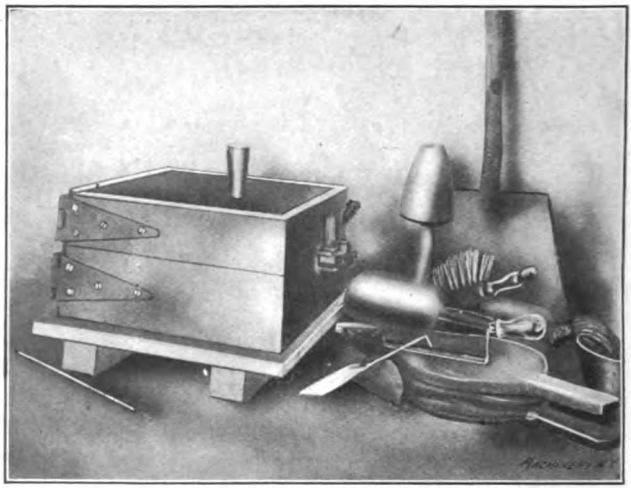

Fig. 31. The Mold and the Molder's Tools

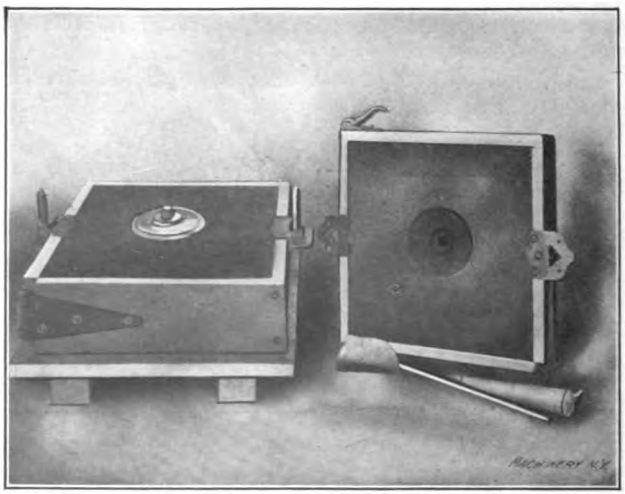

Fig. 32. Ready to Draw the Pattern

wood chuck, and Fig. 23 shows the turning of the wood chuck to fit the recess in the pattern. The pattern is held to the wood chuck by strips of paper glued between the face of the chuck and the pattern; this permits the pattern to be removed after the turning of the seat for the hub, which operation is shown in Fig. 24.

Fig. 25 shows the tool rest swung to a position that allows the hub to be tried into the recess, as in Fig. 26. Fig. 27 is the pattern removed from the chuck with the hub and core prints ready for gluing into place. This is done in Fig. 28, and in Fig. 30 the pattern is shellaced

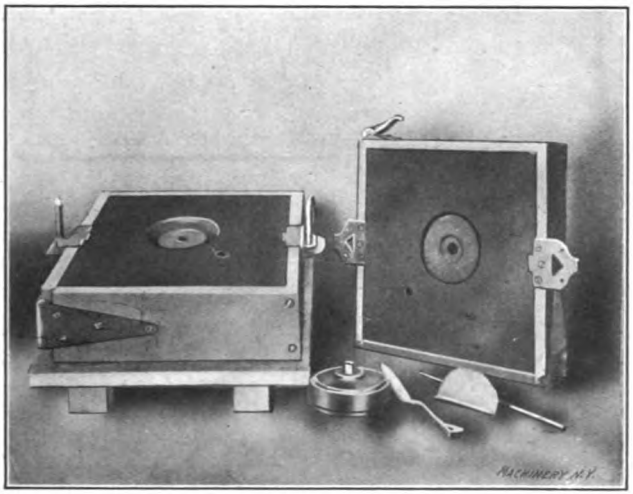

Fig. 33. The Pattern Drawn

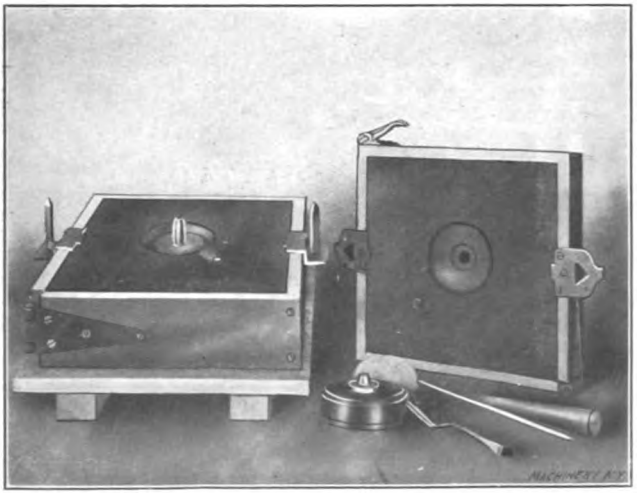

Fig. 34. The Core in Place, ready for the Cope

ready for molding. The tools used by the patternmaker appear in Fig. 29.

Considered from the viewpoint of the foundryman, a pattern is a useful but not an indispensable tool, and with it he can more easily

"simple." In Fig. 35 are the two parts of a flask made hinged so as to be snapped open by the molder to remove them from the sand mold,

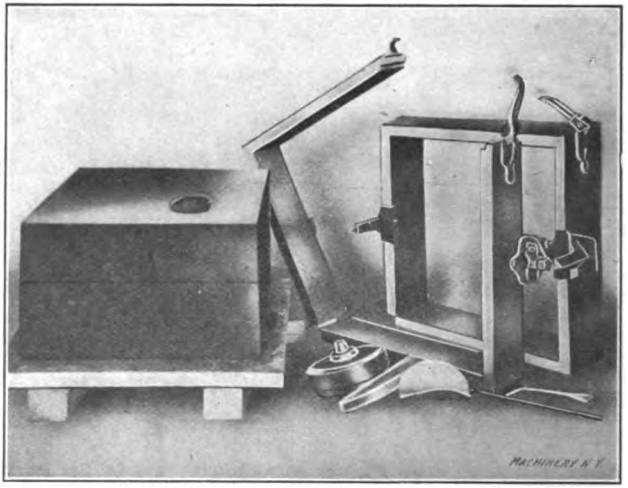

Fig. 35. The Completed Mold

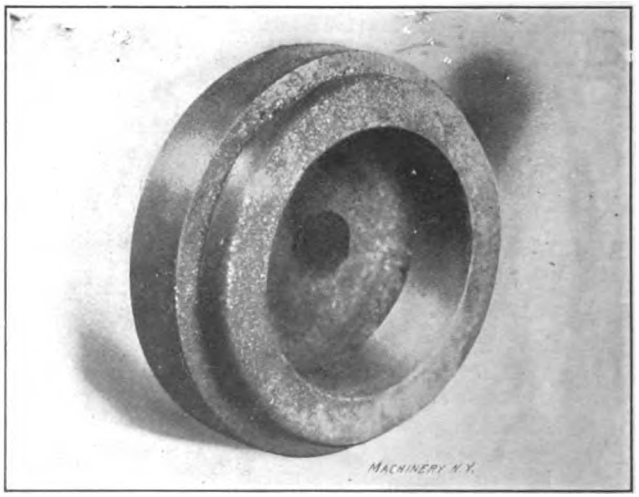

Fig. 36. The Rough Casting

and in Fig. 31 is the sand mold complete with the taper plug that forms the gate in place. Some of the tools used by the molder are shown in this view. For convenience in handling the upper and lower parts of the flask—termed the *cope* and *nowel*—as much of the pattern as its shape will allow is bedded into the nowel, as in Fig. 32.

With the pattern withdrawn, as in Fig. 33, a cavity is left for filling with the melted metal. As a portion of the cavity is in the cope, the flask needs to be closed when poured. To lead the metal into the cavity made by the pattern, a gate is cut beside it out to that left

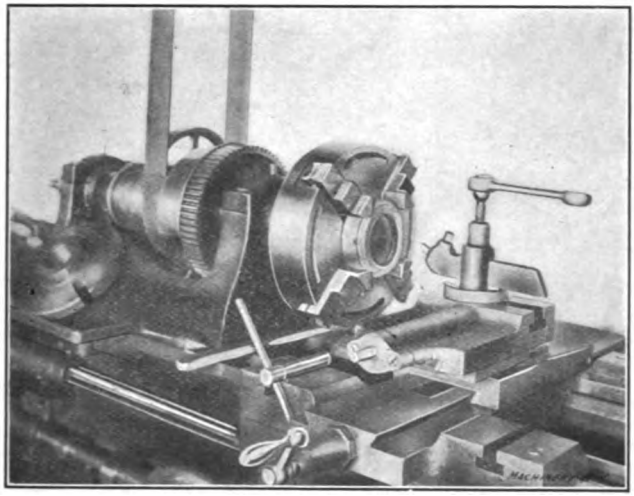

Fig. 37. Truing up the Casting in the Chuck

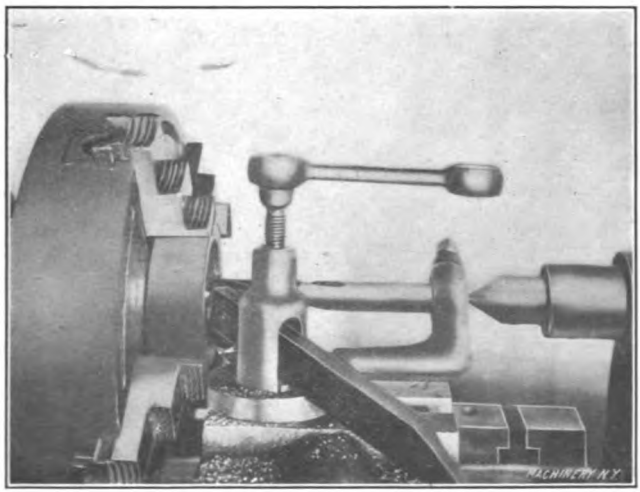

Fig. 38. Drilling out the Hole

by the tapered plug. This is shown in Fig. 34. To form a hole in the center of the casting, a sand core is placed in that part of the cavity left by the core prints, and the mold is closed and the flask removed. The mold now presents the appearance of Fig. 35, and is ready for

can be conveniently poured. After the mold is poured, the sand is broken apart, and the casting is allowed to cool until it is ready to be

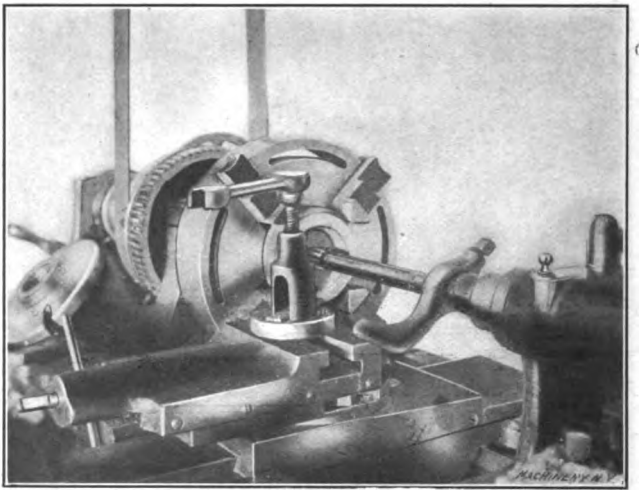

Fig. 39. Reaming the Bore

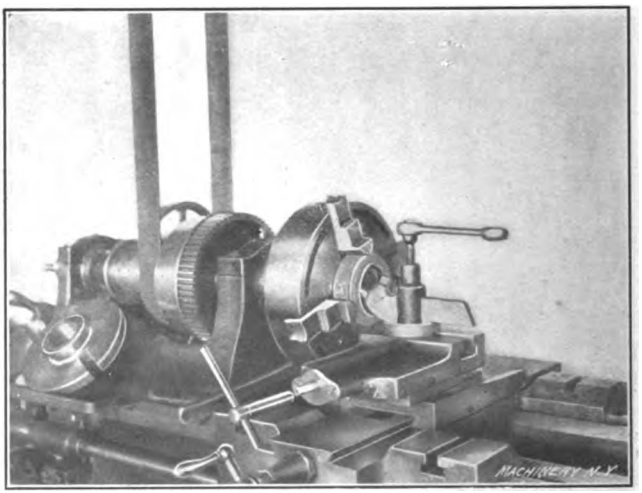

Fig. 40. Roughing the Bottom of the Recess

placed upon the pickling bed and prepared for the machine shop processes, and appears as in Fig. 36.

The first operation on the casting in the machine shop is to true it up in a lathe chuck and finish out the hole. To insure a satisfactory hole three tools are used; a drill, lathe reamer, and hand reamer, in

the order named, each tool leaving the correct amount of stock for the succeeding one. To indicate the position of eccentricity when truing up the piece in a chuck, either chalk or a lathe tool may be used. Fig. 37 shows the piece ready to be drilled and lathe reamed, Fig. 38 and

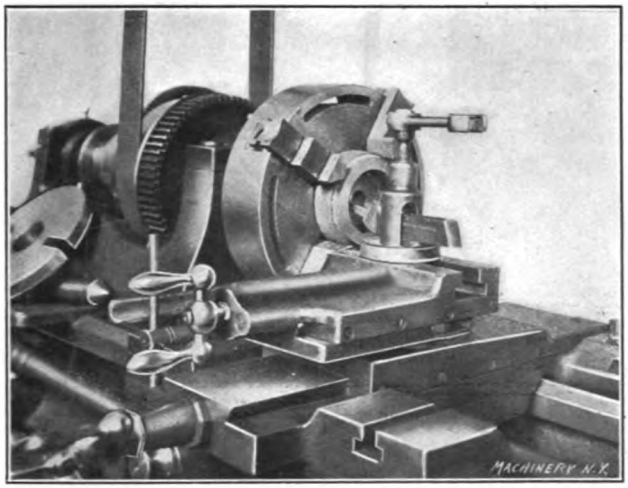

Fig. 41. Finishing the Recess

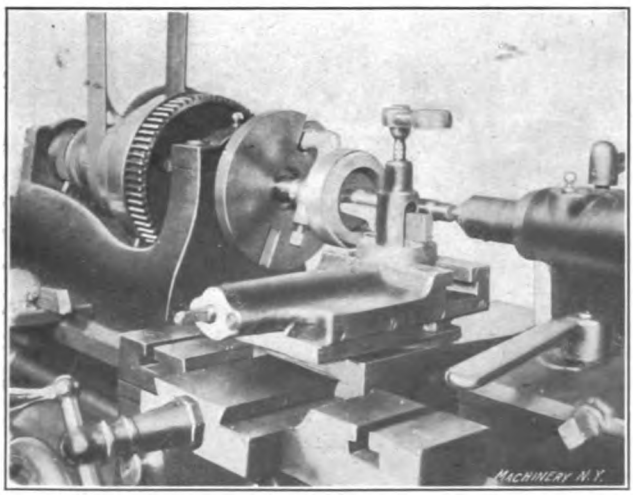

Fig. 42. Finishing the Inner Circumference

Fig. 39 completing the operation. If the drill tends to wabble when it is being started, the butt end of a lathe tool held as in Fig. 38 steadies it. The bottom surface of the recess can be more easily finished when held in the chuck than afterward. Figs. 40 and 41 show this being

Fig. 42 illustrates the finishing of the internal circumference true with the hole. While it would be good enough practice to rough out

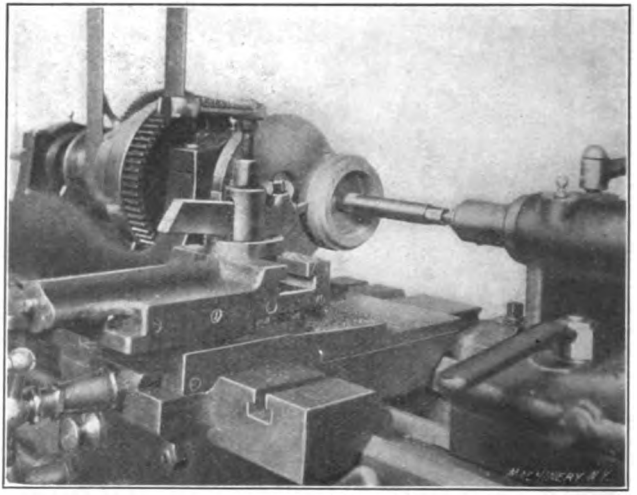

Fig. 43. Rough Turning the Outside Diameter

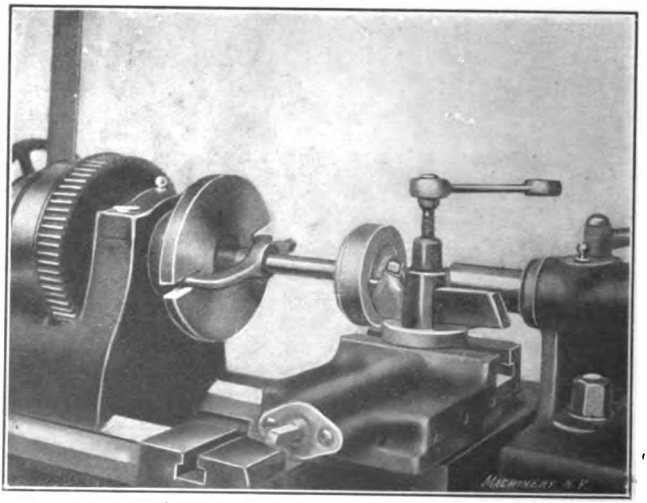

Fig. 44. Roughing the Outer Face

and finish this surface while the piece was held in the chuck, in order to introduce the method employed for work where a high degree of accuracy is required, this operation has been shown carried out with the work on a true-running mandrel.

In roughing out and finishing the outer circumference, as in Fig. 43, the concave surface for the teeth is left as the roughing tool leaves it. Roughing the outer worm-gear face, as shown in Fig. 44, is best done by feeding from the outside toward the center, as the hard skin

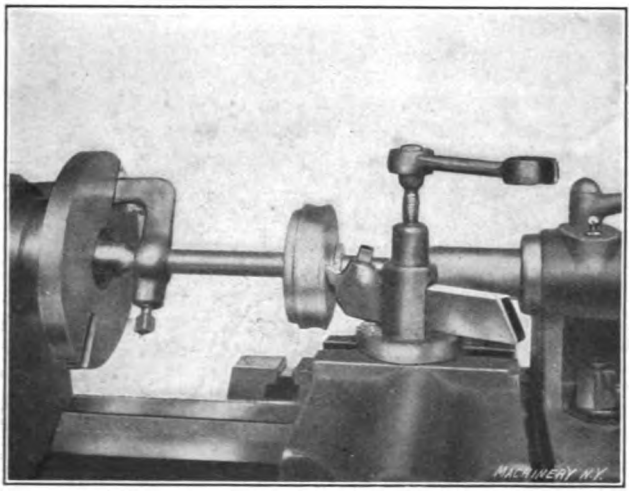

Fig. 45. Finishing the Face with a Scraping Cut

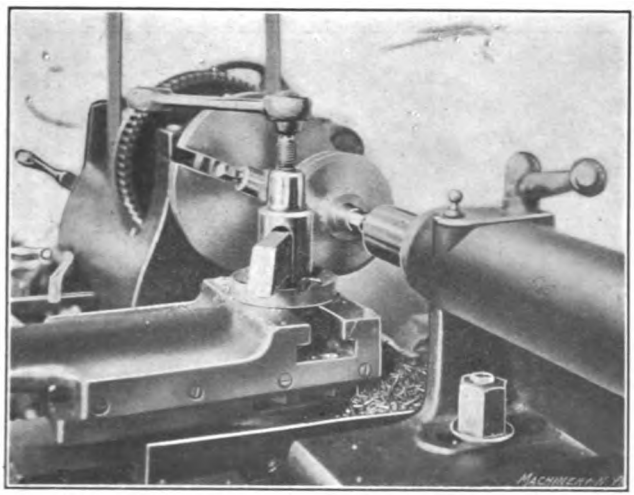

Fig. 46. The Finished Surface

or scale of the casting is pried off or crumbles ahead of the cutting edge. Finishing this surface is done by lathe scraping, which leaves a smooth, polished surface. For this purpose the tool is fed in the reverse direction from that of roughing, or from the center outward. Fig. 45 shows the method and Fig. 46 the results.

The concave surface upon which the teeth are cut is easily made, as in the illustration, Fig. 47, by means of a radius tool. If a comparatively slow speed is used and a firm, steady feed, the tool will not give trouble by chattering. The fact that such a tool removes actual

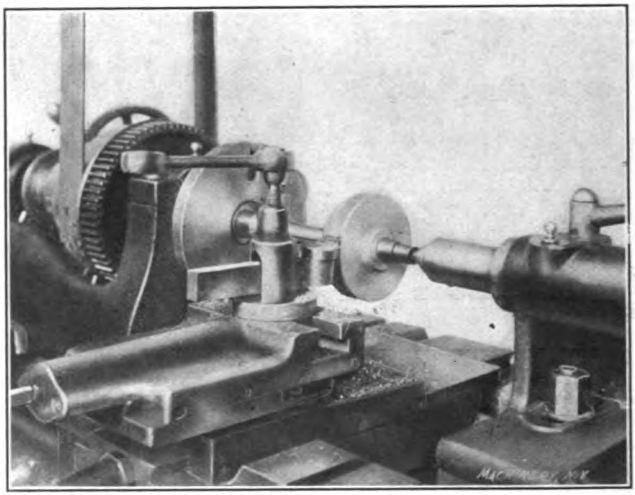

Fig. 47. Radius Tool for Tooth Surface

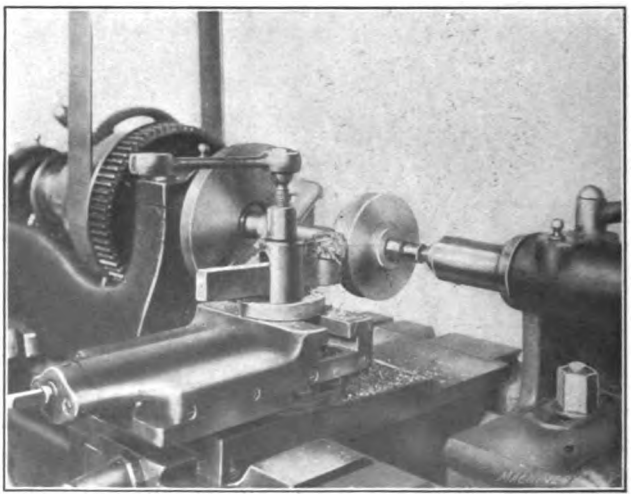

Fig. 48. Chips made by Radius Tool

shavings when properly used is clearly shown in Fig. 48. When the corner has been beveled or chamfered, as in Fig. 49, the piece is ready to have the teeth cut on its circumference. Before doing this it may be well to consider briefly the way in which the teeth *may* be cut.

Worm-gears used as adjustments do not need to have other than line contact between the teeth of the worm and gear, and suitable teeth may be formed by using a single cutter of the proper curvature. This is very clearly shown by the Brown & Sharpe Mfg. Co., in their treatises

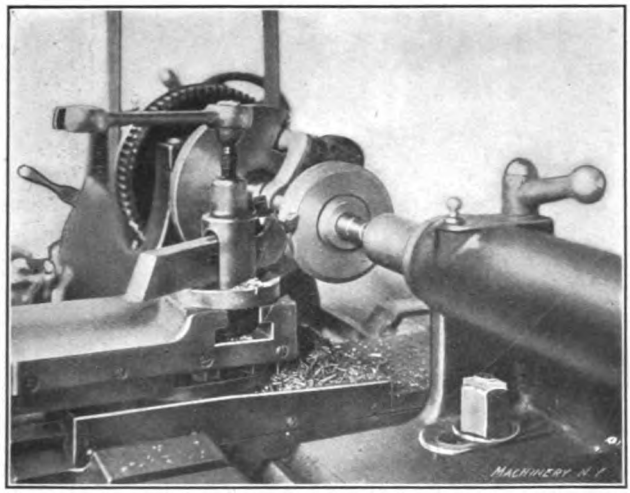

Fig. 49. Chamfering the Corner

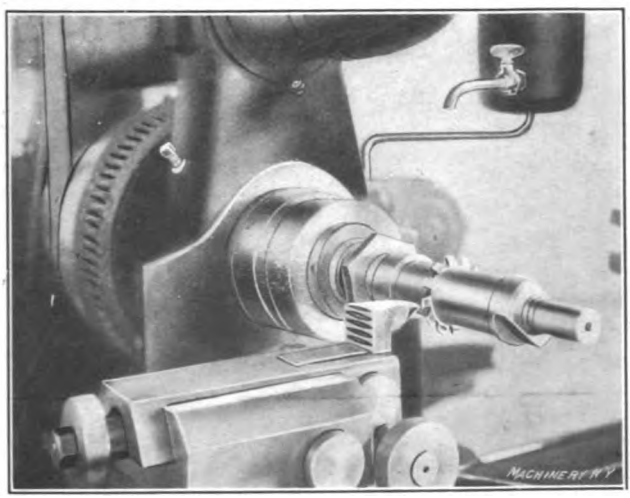

Fig. 50. Centering the Gashing Cutter

on gears and the milling machine. Where, however, the worm and gear are used to move a load, as in the case of a feed worm drive, surface contact between the teeth is made necessary. To obtain this, they are formed by a cutting tool termed a "hob," and the operation

is called "hobbing." If the hob is allowed to space the teeth without previous "gashing" it will cut a larger number of teeth than is desired upon the given circumference. Gashing prevents this, and can be done by using any cutter that will leave enough stock upon the sides of

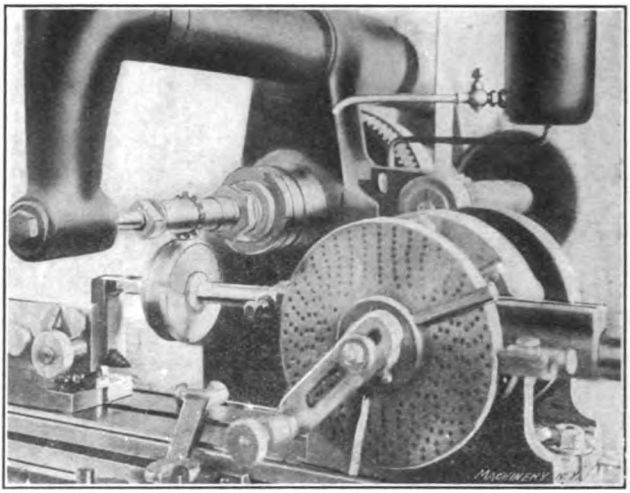

Fig. 51. The Cutter Located with Reference to the Blank

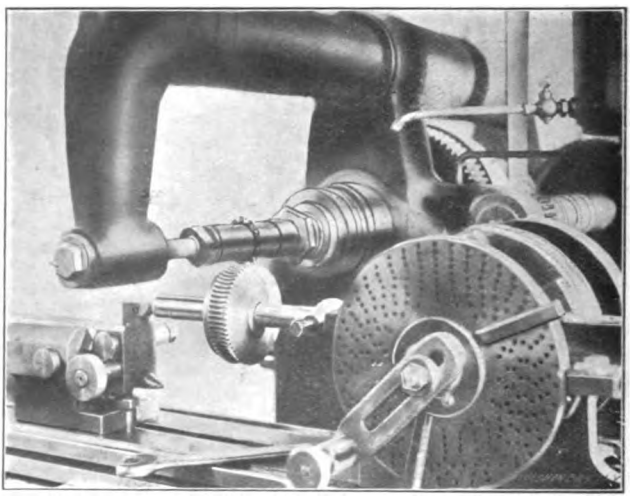

Fig. 52. Gashing the Worm-wheel

the teeth to permit finishing by the hob. The gashing cutter may be set central, as illustrated in Figs. 50 and 51. Gashing after the cutter is properly set is a question of indexing the required number of spaces and of feeding the work vertically against the cutter to

section of a nut, its teeth will have a *left-handed* angularity if the worm is *right-handed*. The work table should be swiveled to give this when the blank is gashed, and afterward set to zero when hobbing the

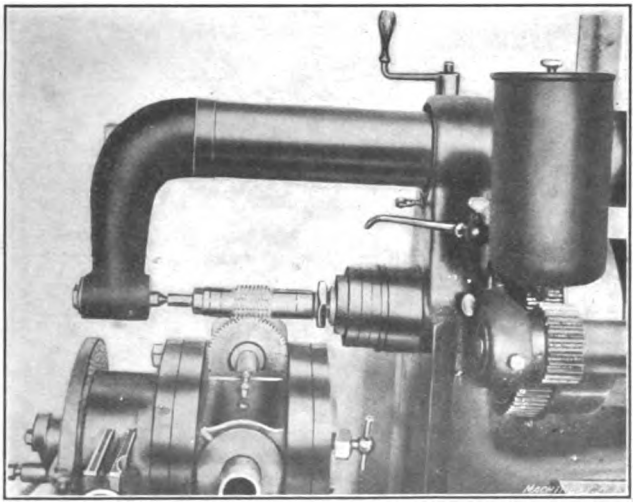

Fig. 53. The Hob in Place

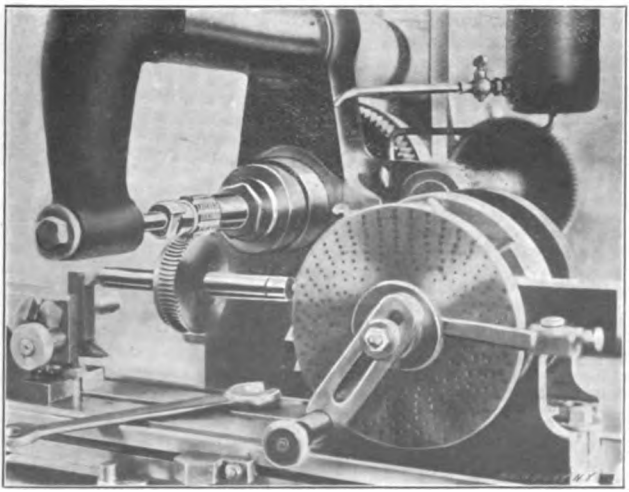

Fig. 54. The Finished Worm-gear

teeth. After the spaces have all been indexed as in Fig. 52, the dog is removed from the mandrel and the hob placed in position, as shown in Fig. 53. In this position, and mounted as shown, the hob forms up the teeth and rotates the blank. The feed is vertical as for gash-

ing, and to such a depth as necessary to give the required distance "center to center" of worm and gear. The finished job is shown in Fig. 54, and a general view of the machine in Fig. 55.

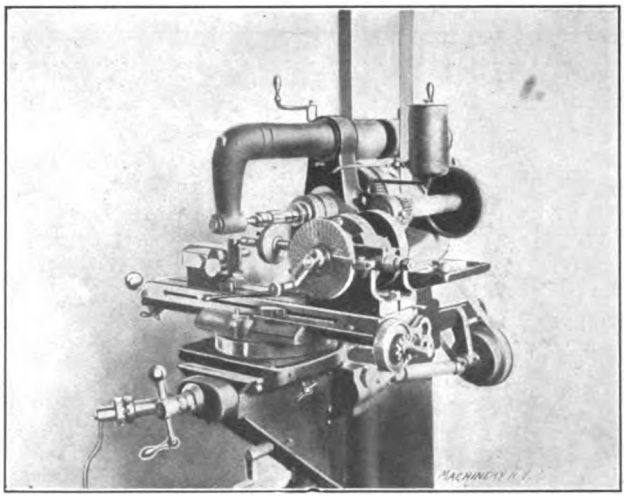

Fig. 55. Milling Machine Set up for Hobbing

In the foregoing only a mere outline of the operations has been given in words, the halftones being depended upon to tell the story of the work carried out better than could an elaborate description.

SPINDLE CONSTRUCTION*

The spindles used in boring mills, drill presses, milling machines, and lathes are usually fitted with a threaded nose, and a tapered hole to hold a collet, an arbor, or a pointed center. Milling machine and lathe spindles are also made with a hole throughout their entire length in addition to the other features. This hole is a convenience in many ways, as it is possible to pass stock to be operated upon through the hole. In the flat turret lathe and in the different makes of screw machines this is the principal method of feeding stock to the several tools held in the turret of the machine.

The spindles of the above-mentioned machines are either made from a good bar of machine or 20-point carbon steel, or they are made from crucible steel forgings of about 50-point carbon, and are commonly spoken of as hammered crucible steel spindles. High carbon or tool steel is used at times for spindle work, but this can be classed as special spindle work, and its use is rare. The requirements of spindle construction are that the spindle be perfectly straight, that the journals be round, straight, and true-running, that the nose be threaded to run true with the journals, and that the tapered center hole also run perfectly true with the journals. The spindles in any of the first-class machines are constructed to fulfill all these requirements to a remarkable degree. Several makers, for example, test the truth of the tapered hole with a test bar of at least one foot in length, and allow a variation of less than 0.001 of an inch from truth at the outer end of this test bar, a severe test when one considers that these are not special machines, but are regular commercial products.

Tools Used in Spindle Boring

The producing of holes throughout the length of spindles and shafts has led to the devising of machines and appliances for deep drilling that are peculiar to such work. To commercially drill spindles at a profit requires that the maximum feed be maintained. It is a matter largely of furnishing a free-cutting tool, amply lubricated and cooled, and keeping the hole free from the cuttings or chips. No method that does not fulfill the above conditions can be said to be a complete success. Where, however, but few spindles are to be drilled, and when the number does not warrant the purchase or construction of special spindle drilling machinery, the engine lathe or a drill press can be used to do the work. Owing, however, to the difficulty of keeping the hole freed from chips when the work is held vertically, the lathe is the tool or machine mostly used for this drilling job. The drills used in deep drilling of this kind are the ordinary twist drill, Fig. 56, the oil tube twist drill, Fig. 57, the straight flute or "Farmer" drill, Fig. 58,

* MACHINERY, June, 1904.

the half-round drill or hog-nose drill, Fig. 60, and the special hollow drill, shown in Fig. 59. This last drill is used in a special drilling machine, as a rule, and not in ordinary lathe drilling.

Where only a few spindles or shafts are to be drilled, the common twist drill, shown in Fig. 56, or the straight-fluted drill, shown in Fig. 58 are used. As they are ordinarily made of much shorter lengths than the hole to be drilled is likely to be, some means must be used to lengthen them sufficiently to allow of the reach desired. This can be accomplished by first turning the shank end of the drill below size. The stem or shaft to lengthen the drill can be a piece of cold rolled steel of the same diameter as the drill. A hole is made in one end of this stem of a size that will closely fit the reduced shank of the drill. The turned down shank of the drill is then "tinned" with solder and

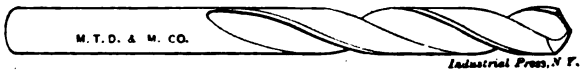

Fig. 56.

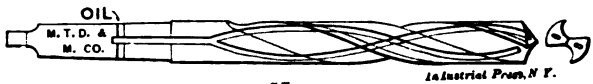

Fig. 57.

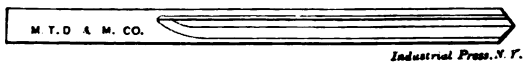

Fig. 58.

Fig. 59.

Figs. 56 to 59. Tools Used in Spindle Boring

some of the soldering acid is dropped into the hole in the stem. To put the two parts together, grasp the drill next to the reduced end with a pair of gas pipe pliers, and by holding the tinned end of the drill and the drilled end of the stem in a Bunsen flame, they can, when heated sufficiently to make the solder run, be forced together. When cool they will be capable of withstanding great stress. This process is termed in the shop "sweating in" a drill.

Where the hole which is to be drilled is of such a depth relative to its diameter as to make the length of shaft or stem so great that it will be too slender to use when the hole is first started, several stems of varying lengths may be provided. The process of sweating on these stems is so simple that one stem when used to its depth can be unsoldered and another and longer one sweated into its place. The holding of the drill in a hand vise or pipe pliers when soldering insures keep-

ing the flutes cool beyond the part so held and the hardness of the cutting parts is not disturbed. In deep drilling with this tool it is necessary to withdraw the drill as often as the flutes are filled with chips, to allow of their removal and also to lubricate the cutting edges. As this is time-consuming, when many spindles are to be drilled in the lathe, the oil tube drills shown in Fig. 57 are better for the purpose. The oil tubes are joined at the rear end or shank of the drill and are covered by some form of hollow bushing. This bushing is tapped upon its circumference to take a short piece of gas pipe. A hose connection between this short piece of gas pipe and the oil pump allows the oil to be forced through the oil tubes to the cutting lips.

To allow the chips and oil to force out, two straight grooves are milled on opposite sides of the stem or shaft and connecting with the helical or twisted flutes. To break up the chips and insure their being forced out by the oil, notches or steps are ground in the cutting lips of the drill. These notches must always be of a greater depth than the distance the drill advances per revolution. If the drill is sharpened upon a drill grinding machine, each lip will cut evenly, and chips should come away evenly from each cutting edge. Drill grinders, however, are designed to leave the end of the drill of such a form as will allow it to just clear the bottom of the hole being drilled. As the

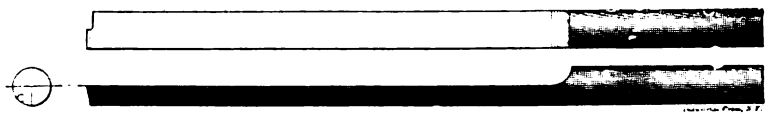

Fig. 60. Half-round, or "Hog-nose" Drill

oil tubes end in this surface, the oil is prevented by this small clearance from flowing to the full capacity of the tubes, and it is necessary to grind off the back edge of the flute squarely up to the end of the oil tube. This weakens the cutting edge somewhat, but does not do so to an extent worth considering, and allows of a free flow of oil.

The half-round or hog-nose drill shown in Fig. 60 can be used in either the engine lathe for drilling, or in a special drilling machine designed for drilling spindles. It is commonly used, in fact, in the special drilling machines of one well-known machine tool company, for all holes under one and one-quarter inch. In its smaller sizes the hog-nose drill is usually made of tool steel and the cutting end cleared and hardened the same as a lathe tool. In the larger sizes the drill is made of machine steel, and a tool steel cutting blade is fitted to the leading end. The edge of this drill is also notched to break up the chips as in the drills spoken of above. This drill, when correctly made, ground, and started, will, if well lubricated, leave as round, true, and finished a hole as any other drill.

Drilling the Hole in Spindles

In Fig. 61 is shown an engine lathe set up for drilling the lengthwise hole in a spindle. In this case, as the spindle is rather slender and liable to spring while it is being worked upon, the tapered center

hole is made the last operation in the construction, the bearings being ground just previously. This order should always be followed for slender spindles to insure the truth of the tapered hole with relation to the bearings. The spindle is first roughed to a finishing allowance, and short bearings are turned upon the ends to a high degree of accuracy

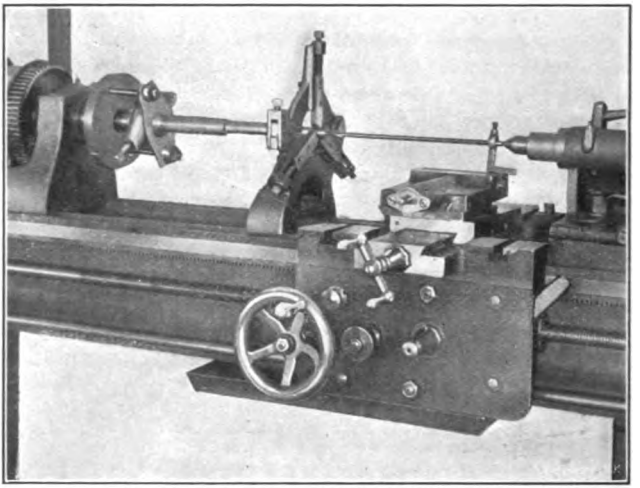

Fig. 61. Lathe Arranged for Spindle Drilling

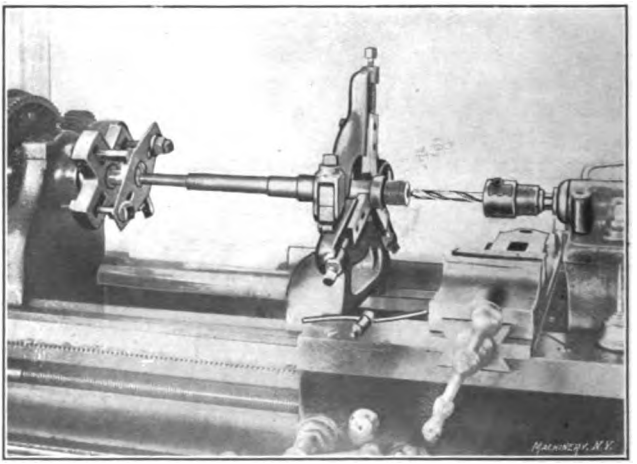

Fig. 62. Drilling for the Taper Hole

for center rest support. The larger end or nose of the spindle is placed upon the live center, which is supposed to be trued up nicely, and is held in place on the center by a "hold-back" as shown. The smaller, or what will finally be the back end, is run in a center rest, and is drilled into a short distance with a drill somewhat smaller in

diameter than the drill to be finally used. An inside boring tool held in the lathe toolpost is then used to enlarge the small hole to a size that will allow the drill it is intended to use to just slip in without shaking. The drill is in this manner started in its cut perfectly con-

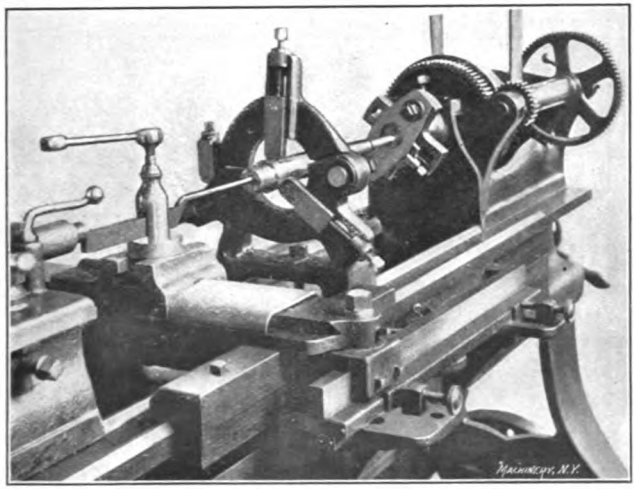

Fig. 63. Boring the Taper Hole

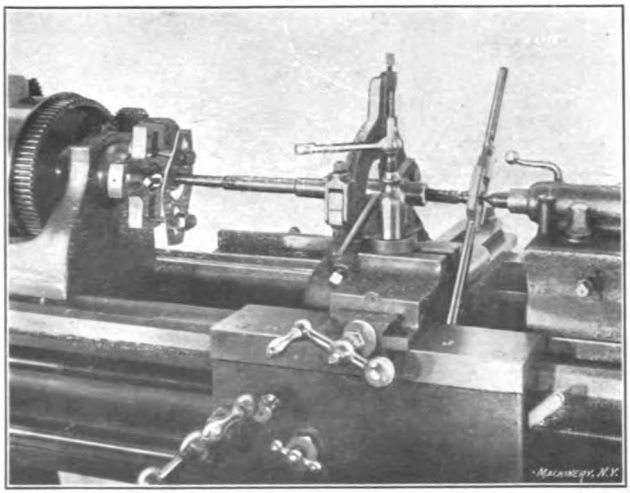

Fig. 64. Reaming the Taper Hole

centric with the center line of the work. Drills sweated into shanks or stems of varying lengths are used to drill the hole to a depth sufficient to meet the tapered center hole when it is machined. This leaves the center hole in the faceplate end of the spindle untouched until all operations are finished. Before removing the spindle from

centers when finishing and grinding. If the spindle is stiff enough to warrant finishing the tapered center hole before grinding and finishing the spindle, it must be held with the small end trued up in

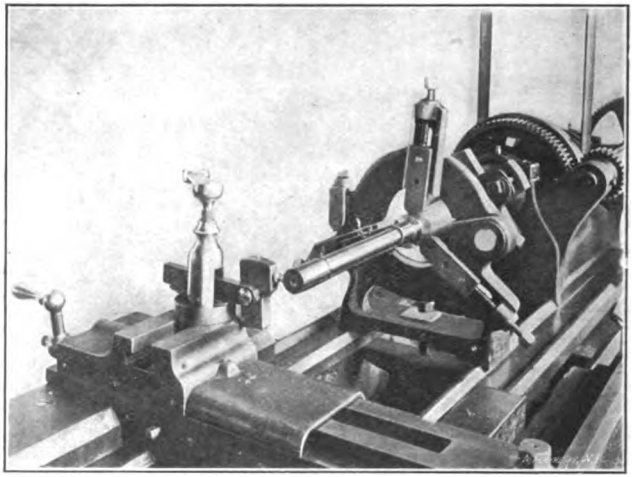

Fig. 65. Use of Test Bar and Indicator

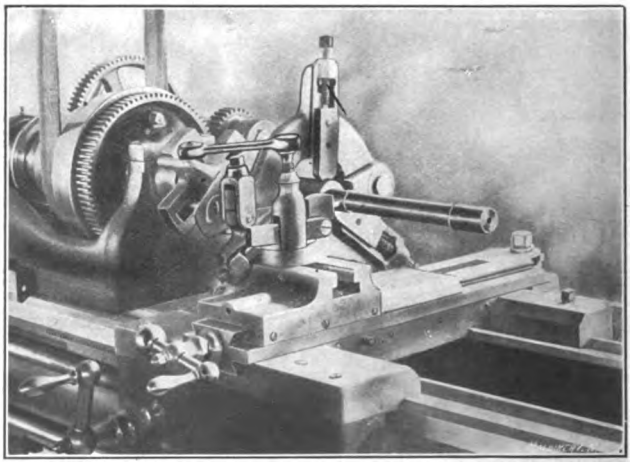

Fig. 66. Testing at the Inner End of Bar

a chuck instead of on the live center. This brings the work in the reverse of the position shown. The nose is held in the center rest, a true-running bearing having been turned where it is to bear in the center rest. As said before, the spindle is roughed to a finishing size before drilling. The hole is then started true and is drilled as before.

If the hole is large enough, however, and the spindle stiff enough, the hole may be drilled by using some of the oil tube drills mentioned above.

Machining the Tapered Hole

Fig. 62 shows the spindle mounted ready to have the tapered center hole machined. The drill used to rough the hole is slightly smaller in diameter than the finished hole is to be in its smallest part. After the hole is drilled, a roughing reamer like the one shown in Fig. 71 is used to fully rough out the hole. This leaves the hole of an approximate size and taper. To true the hole to perfect concentricity, it is bored out with an inside boring tool held in the lathe toolpost, as in Fig. 63. A lathe having either a compound toolpost or a taper attachment must be used for this job. The first setting of the taper will scarcely be more than an approximation, and alterations must be made after each cut until the tapered hole is like the gage used. A plug, as shown

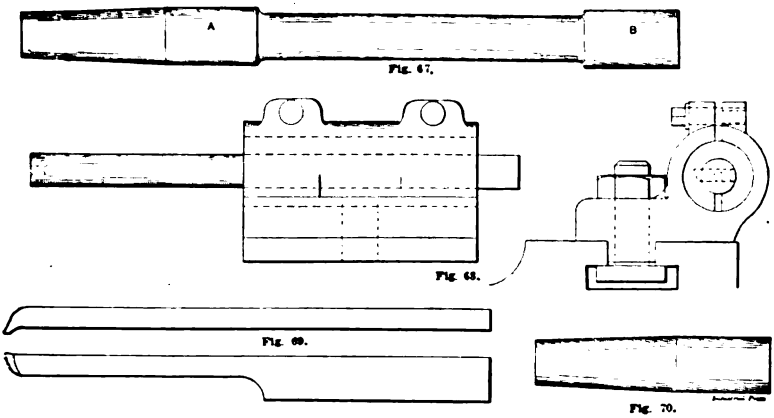

Figs. 67 to 70. Tools for Spindle Boring and Testing

in Fig. 70, may be provided for a gage, or the finishing reamer, Fig. 72, may be used to try the taper with. Fig. 63 is a back view of the lathe and shows the taper attachment arranged to bore the tapered center hole. The hole is bored in this manner to the right diameter and finished smooth by scraping out a few thousandths of an inch with the finishing reamer held as shown in Fig. 64. If all the operations have been carefully carried out, the hole will be true when tested with the bar shown in Fig. 67. This test bar is of tool steel, hardened and ground upon the tapered surface and at the diameters *A* and *B*. Its length outside the tapered part may vary from seven inches to fifteen inches, and it must be known to be perfectly straight and round. To use this bar the tapered hole is carefully wiped out, so that no chips or oil will be present. The bar is then inserted and pressed home with a slightly twisting pressure. A Bath indicator can then be held in the toolpost of the lathe with its feeling point touching the test bar as in Fig. 65. The work is rotated at a medium speed and the bar is

another light reaming may be necessary. If, however, the hole is only slightly out of true, the high side of the hole can be marked, and a light scraping with the finishing reamer upon that side will true it up. Not much stock must be removed in this way, as the result of scraping upon one side only is to make the hole oval instead of round. When the hole has been bored and reamed very carefully, the bar will not usually run out on the first trial more than 0.001 inch in 10 inches, and a touch of scraping will put this error right. The inside boring

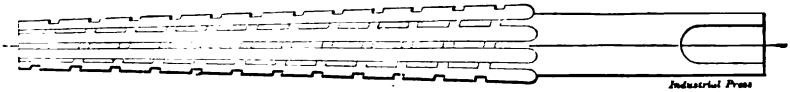

Fig. 71. Roughing Taper Reamer

tool shown held in the toolpost in Fig. 63 is the common forged tool, and its usual form is shown in Fig. 69. Where shallow holes are to be turned out this is a good tool and is cheaply made. The tool and holder shown in Fig. 68 are, however, a better form when much work is to be done. The bar that holds the tool can be revolved to bring the tool point into any desired relation to the hole. By the use of suitable bushings, bars of any diameter may be used, and the length of bar can be easily suited to the length of the hole it is to be used upon. This holder takes several shapes or forms in different shops, and is well worth its cost. When large holes are to be started in the

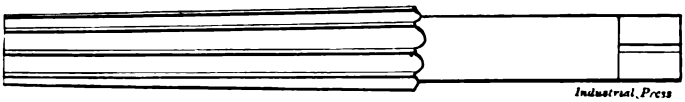

Fig. 72.

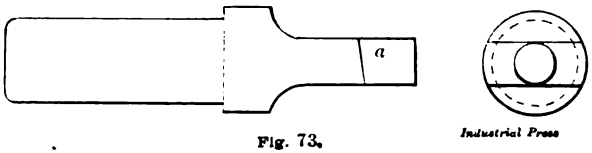

Fig. 73.

Figs. 72 and 73. Finishing Reamer and Counterbore

end of the spindle, a small drill may be used to drill a shallow hole. The shallow hole can then be turned concentric with an inside boring tool, as stated above, and finally enlarged to the diameter of the drill to be used by counterboring with the tool shown in Fig. 73. The teat or leader *a* is a nice fit in the smaller concentric hole, and leads the cutting edges straight with the center line. A depth sufficient to admit the sizing drill beyond its cutting edges is all that needs to be made with the counterbore.

Taper reamers have a tendency to draw into the work when in use. To counteract the drawing-in action, it is common practice to cut a

seldom treated in this manner, as their use is just to scrape the hole to a perfect surface.

It may be mentioned here that there are several errors that one is apt to make in finishing a tapered hole in a spindle. 1. If the spindle is slender, care must be taken that the hold-back or clamp does not spring the work by being tightened up too hard. Anything more than enough to hold the work to the center is too much. 2. In turning out the hole with the boring tool, set the cutting point at the height of the center

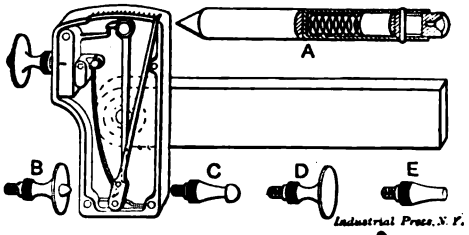

Fig. 74. Bath Test Indicator

line of the lathe spindle to get a true tapered hole. 3. Be sure that the center line of the work and the live and dead centers are coincident with the center line of the spindle. Fig. 74 shows the interior of the Bath indicator and the several feeling points used. This is a very sensitive tool. A movement of one-half of a thousandth of an inch of the feeling point moves the indicator finger a distance of 1-12th inch.

Boring Crucible Steel Forging Spindles

Crucible steel forgings for lathe spindles, as delivered to the workman, are usually somewhat crooked and may be enough so as to require straightening, but there is usually an excess of stock to finish, and if the centers are located with judgment, the forging will finish

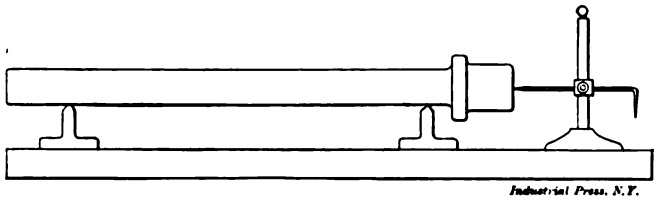

Fig. 75. Simple Method for Locating Centers

out. Various ways of locating the centers are in use in different shops. The engraving, Fig. 75, illustrates the method in use in one shop. Two "ways," similar to those used in balancing pulleys, are provided, and the forging is laid across these. Care must be exercised to have the "ways" placed so that the center of what is to be the journal bearing is central with them. The journals are, of course, the most important parts of the spindle and must clean out when to size. The forging is rolled into several positions on the "ways," and is scribed across each end with a scratch block or a surface gage, and the center

afterwards done under a drill press, and the forging is ready for the reduction lathe. With high-speed steel tools the forgings are roughed to approximate sizes and shapes at a rapid rate. A feed of 1/16 inch per revolution is a common standard, with a depth of cut of

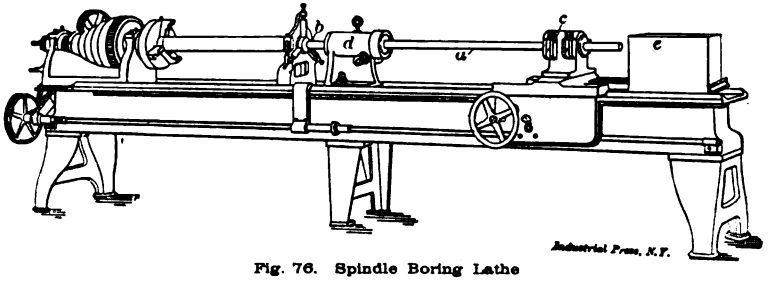

Fig. 76. Spindle Boring Lathe

⅛-inch and a surface speed of one hundred and twenty-five to two hundred feet per minute. While coarser feeds and depths of cut are possible, it is not usual to push the tool much beyond those given, on work of this size.

From the reduction lathe, where the roughing is done, the spindle goes to the special spindle drilling lathe illustrated in Figs. 76, 77,

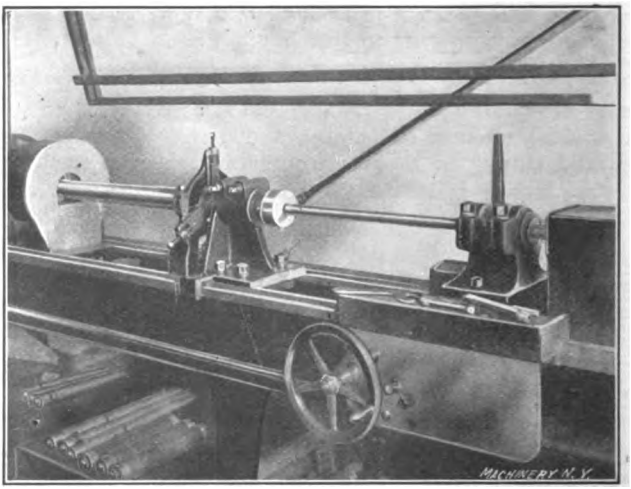

Fig. 77. Drilling the Hole through the Spindle

and in section in Fig. 82, in which latter engraving the drill appears in connection with its extension tube. In Fig. 84, *c* is shown a drill with straight flutes and in Fig. 83 one with spiral flutes. Either of these drills may be used as tools in the drilling lathe shown.

In Fig. 76, *a* is the tubular extension of the drill *b*. The tool clamp *c* is held upon an ordinary lathe carriage and is fed to the work in the

same manner as the lathe tool in regular turning operations; *d* is a center rest or guide and serves two purposes. It centers the drill and steadies it to its work, and it also furnishes a reservoir through which oil is pumped to the drill as it cuts its way through the blank. As shown in Figs. 76 and 78, *d* is drawn back from the drilling position to

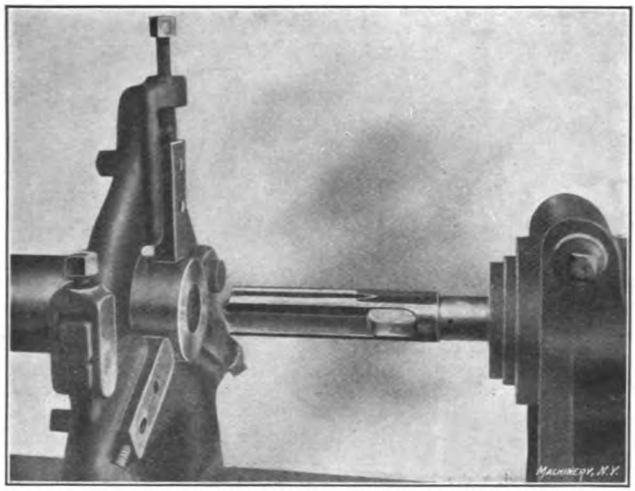

Fig. 78. Showing the Guide Drawn back to Expose the Drill

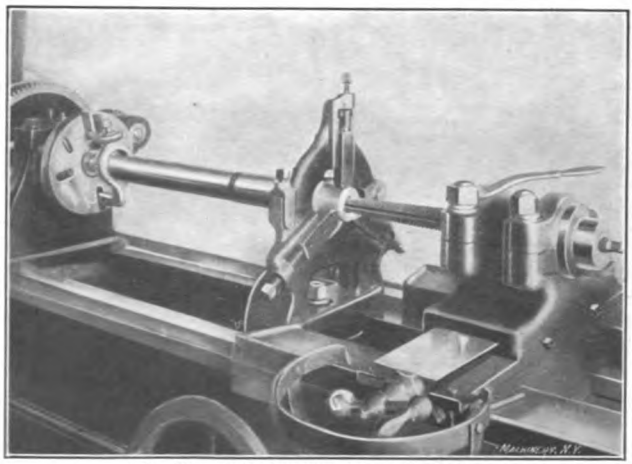

Fig. 79. Roughing out the Tapered Hole

show the drill more clearly. In use it is close to the end of the spindle or embraces the end as shown in Figs. 77 and 82. The tank *e* is attached to the carriage by a hook and is towed by it. The oil and chips fall into this tank as they are forced through the tube *a* by the pump pressure. The front end of the tank is made of wire netting,

back by the netting. The lathe bed is fitted with a bottom for holding oil, and is furnished with a pump to force the oil to the cutting edges of the drill.

By comparing Fig. 83 and Fig. 84, *c*, it will be seen that the oil

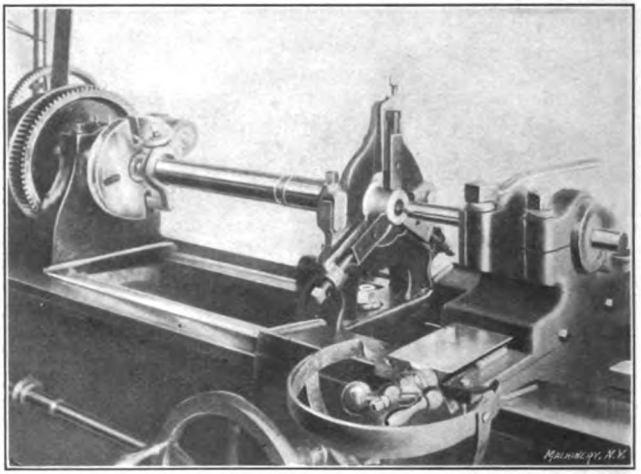

Fig. 80. Truing the Hole in the End of the Spindle with Boring Tool

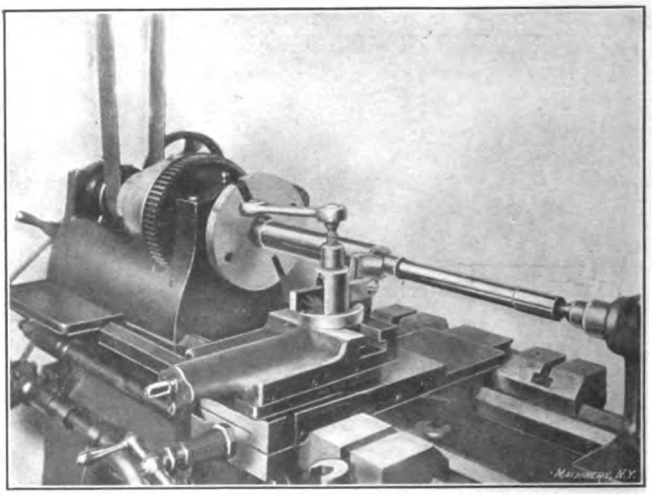

Fig. 81. Accurate Method of Testing Hole in Spindle

from the pump strikes the outside of the drill at the rear end of the flutes and is forced along the flat channels on the outer surface until it reaches the cutting end of the drill. The oil then returns by the deep grooves to the hole, where the grooves meet, and thus enters the tube *a*, passing to the tank *e*, taking along at the same time the chips

as they are cut from the stock. To ensure a free flow of oil past the cleared end of the drill, the backing at the end of the flute must be ground sharply away, as previously mentioned. Small grooves are ground or milled along the cutting lips to break the chips to a size that can be made to force out with the oil. While Fig. 76 and Fig. 82 show details of the several parts, Fig. 77 is from a photograph of a spindle drilling lathe in actual use.

Finishing the Spindle

When the drilling is completed, several methods of finishing the spindle are in vogue, and some of these methods may be of interest.

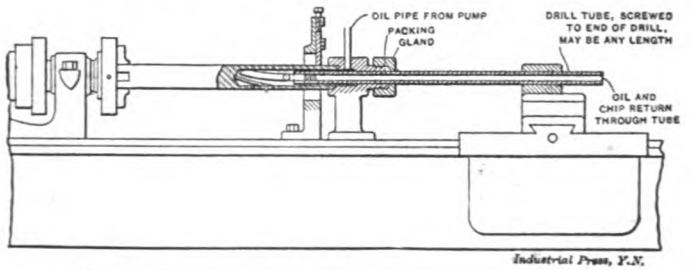
OIL PIPE FROM PUMP
PACKING GLAND
DRILL TUBE, SCREWED TO END OF DRILL, MAY BE ANY LENGTH
OIL AND CHIP RETURN THROUGH TUBE
Industrial Press, N.Y.

Fig. 82. Section of Drill Showing Means for Oil Circulation

When the hole through the spindle is completed, the spindle should be laid aside for a time, so that all the strains may be relieved. If it is desired that the tapered or center hole be finished before the spindle is ground to dimensions, a hardened and ground plug with a true-running center is driven into the rear of the spindle, and it then mounted in a center rest as shown in Fig. 79. The roughing reamer is shown in position to begin roughing the hole to an approximate size and taper. The holder for the roughing reamer is a sleeve with the back end tapped to take an adjustable threaded center. The shank of the roughing reamer is made to fit loosely in the cylindrical holder and is kept

Fig. 83. Drill with Channels for Oil

from turning by a pin through the holder and the reamer shank. The rear center hole of the reamer is held upon the threaded center, and the reamer is as free to adjust itself as possible, the pin preventing its slipping off the center, and also preventing it from turning. The hole is afterward bored to perfect concentricity by using an inside boring tool held as in Fig. 80. To finish the hole, a tapered finishing reamer is held rigidly in the tool block and is used to scrape the hole smooth. As little stock as possible is removed by this last operation. The plug in the rear end of the hole is next driven out, and the rear end of the spindle is countersunk by using the tool shown at *d*, Fig. 84. This

The test bar shown in Fig. 67 is placed in the tapered hole and the spindle and bar are held on centers in a lathe as in Fig. 81. If now it is found that the test bar shows eccentricity at the front end of the spindle, the rear reamed center is scraped until the test bar re-

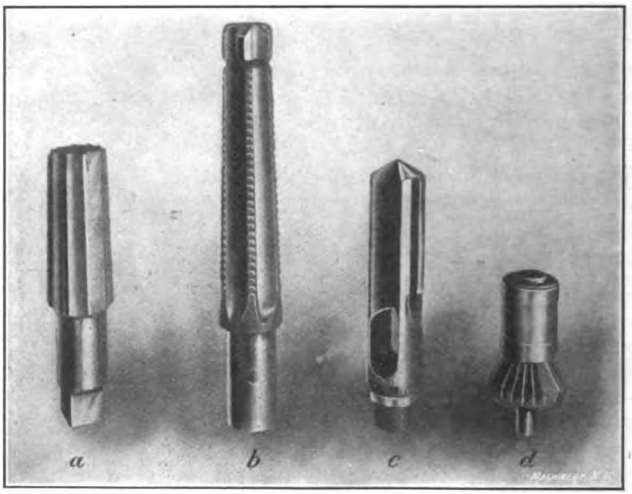

Fig. 84. Tools used in Machining the Spindle Hole

volves true when tested with the "indicator." When this is attained it is sure that the center reaming in the rear end is true with the finished tapered hole, and when a true-running plug is centered in the tapered hole the spindle is in readiness to be threaded, keyseated, and ground to fit the several gears, pulleys, bearings, etc., that are placed on it. If after these operations are completed the spindle does not test up true, there has been carelessness in some of the operations.

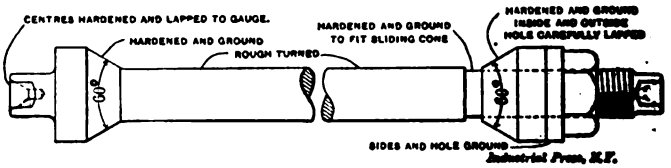
CENTRES HARDENED AND LAPPED TO GAUGE.
HARDENED AND GROUND
ROUGH TURNED
HARDENED AND GROUND TO FIT SLIDING CONE
HARDENED AND GROUND INSIDE AND OUTSIDE HOLE CAREFULLY LAPPED
60°
60°
SIDES AND HOLE GROUND
Industrial Press, N.Y.

Fig. 85. Arbor used when Grinding Spindle

When the face gear next to the front bearing is keyed into place, it is necessary to countersink it lightly, and then stake down the shoulder on the spindle hard enough to prevent the gear slipping along the spindle when the lathe center is driven out While staking this gear on, frequent tests should be made to see that the spindle is not thrown out of true. The method of finishing that follows is another good way of completing the spindle.

After the long hole is drilled, the edges of the hole at each end are chamfered to a 60-degree bearing, using as before the special countersink shown in Fig. 84, *d*, and the spindle is turned to leave 0.007 of an inch on all diameters for grinding, and all keyways and threads are cut except the thread on the nose of the spindle. An arbor such as the one shown in Fig. 85 is then passed through the spindle and tightened into place by the nut shown. This arbor being a standard upon which many pieces may be ground, no pains should be spared to make sure that all surfaces are square and true with the center line. All the grinding is done with the spindle mounted upon this arbor, and as the centers in the arbor are lapped to as near perfection as possible, and are so hard that the wear is small, this method would seem to give almost perfectly ground surfaces. The tapered hole is finally finished by holding the spindle upon the live center and in a center rest, as formerly described. The truth of the tapered hole

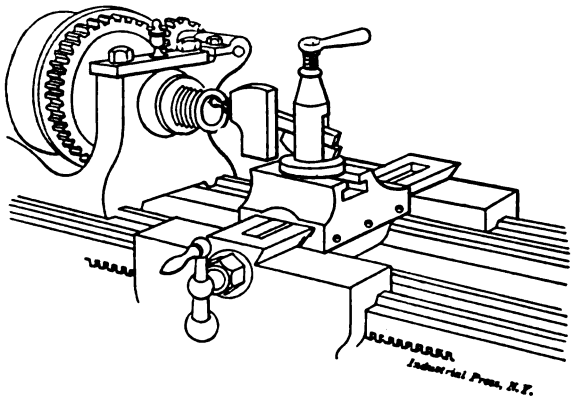

Fig. 86. Method of Testing Taper Hole

can be tested with the "Bath" indicator as in Fig. 65, or the indicator point may be used against the inside of the tapered hole if it is desired. This latter method of testing is shown in Fig. 86, but the one shown in Fig. 65 is to be preferred if the greatest accuracy is desired.

Still another method is to rough-ream the center hole, and then grind the several bearings upon plugs driven into the ends of the spindle. When the gears and the cone pulley are in place, the spindle is scraped and fitted into its bearings. After this is done the headstock is mounted on the bed of the machine, and the tapered center hole is bored out true with a tool held in the tool block, and then reamed lightly and tested as before until it is true running within the limit of error set. This method is a very good one if the spindle has not changed after it was ground. It is quite likely, however, that some changes have taken place when the gears were keyed on, and the spindle is out of true. If the center hole is then bored with the spindle in its bearings the center hole is true with an imperfect and twisted spindle. Using the lathe tends to relieve the strains put into

line with the lathe, and results in a poor-running live center and one that can only by accident be replaced and run true. By the first two methods for finishing the center hole and the surface of the spindle true with each other, any changes made when setting up can be detected and remedied at the time of their occurrence.

The spindles made by the above described methods are usually of 60-point carbon and are unhardened. If greater wearing qualities are desired in the spindle bearings than such spindles will give, low carbon steel is often used for the spindle, and the bearings are then casehardened. The casehardening is done just before the grinding and fitting, and is from 1/32 inch to 1/16 inch deep, and only on the surfaces used for the bearings. To accomplish this, the parts it is desired to retain soft are copper-plated before treating the surfaces it is desired to harden. This copper-plating prevents the action of the casehardening compound upon these surfaces, and the unplated surfaces only are hardened.

In grinding spindles with a long keyway in the surface, as for instance a drill press spindle, it is usual to fit a strip of hard wood into the keyway, and then shape the wood to the circumference of the spindle. When grinding spindles it is desirable to have two grinding machines so set as to have the workman between the two. One machine will have a coarser wheel mounted and will bring the spindles to within 0.001 of an inch of size; they can then be finished upon the second machine with a finer wheel, leaving a surface that does not need polishing. A feed of from one-quarter to three-eighths inch per revolution should be maintained when grinding, and the spindle should be amply supported by back rests.